R. B. EASON.

CAR AXLE-BOXES.

No. 193,858. Patented Aug. 7, 1877.

fig. 1.

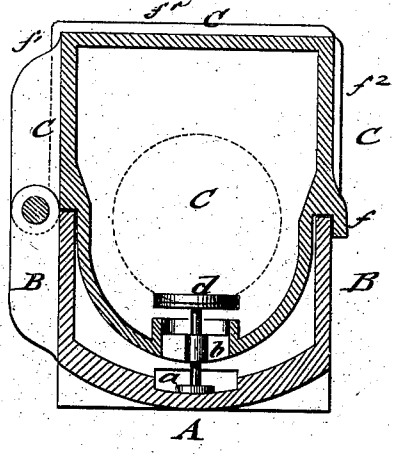

fig. 2.

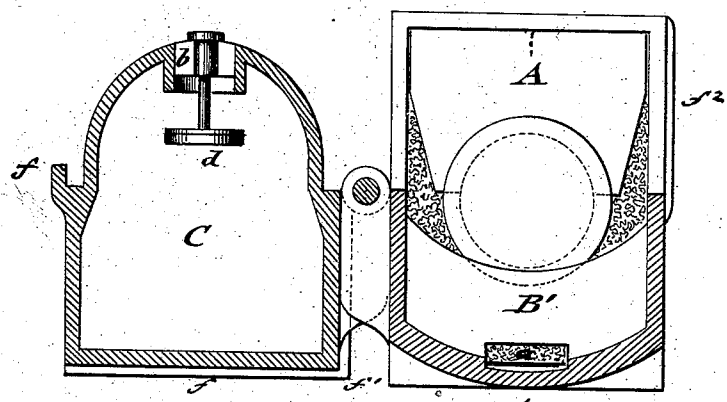

fig. 3.

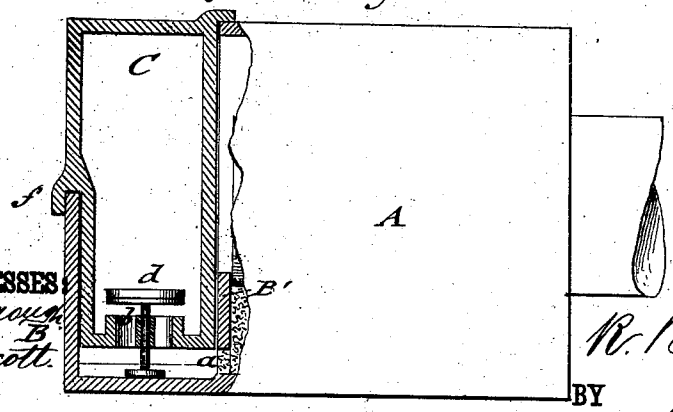

WITNESSES:

J. N. Scarborough.

Alfred Surcott.

INVENTOR:

R. B. Eason.

BY

ATTORNEYS.

N. PETERS, PHOTO-LITHOGRAPHER, WASHINGTON, D. C.

UNITED STATES PATENT OFFICE.

RICHARD B. EASON, OF NEW YORK, N. Y., ASSIGNOR TO HIMSELF AND SILAS A. ALLEN, OF SAME PLACE.

IMPROVEMENT IN CAR-AXLE BOXES.

Specification forming part of Letters Patent No. **193,858**, dated August 7, 1877; application filed June 18, 1877.

To all whom it may concern:

Be it known that I, RICHARD B. EASON, of the city, county, and State of New York, have invented a new and Improved Car-Axle Box, of which the following is a specification:

In the accompanying drawing, Figure 1 represents a sectional front view of my improved car axle box in closed position; Fig. 2, a sectional front view of the same in open position, ready for filling; and Fig. 3 is a vertical transverse section of the same.

Similar letters of reference indicate corresponding parts.

The invention is intended to improve the car-axle box for which Letters Patent were granted to me on the 22d day of May, 1877, numbered 191,037, so that the construction of the same is simplified, the oil-chamber quickly filled and placed in position, and the oil fed to the packing and journal in proportion to the motion of the axle.

The invention consists of a car-axle box with lower extension-chamber, and of a hinged or detachable oil-chamber, with semicircular or other shaped part fitting into the chamber of the box, and having an exit-opening and a valve for closing the opening when the oil-chamber is inserted, but opening the valve when the oil-chamber is in position, by the contact of the valve-stem with the bottom of the extension. The oil-chamber is seated tightly in the axle-box and lower casing of the same.

In the drawing, A represents a car-axle box, which is cast or otherwise provided with a front extension or casing, B.

The casing B extends from the bottom of the car-axle box A to about half the height of the same, and is divided from the axle-box proper by a lateral partition, B′, that retains the packing in the axle-box casing, but admits the passage of oil to the packing by an opening, *a*, near the bottom of the partition.

A hinged or detachable casing, C, is made, at its upper section, equal in size with the lower casing B, so as to form the complement of the same, and at its lower section of semicircular or other shape, according as the casing C is hinged to the side of casing B, or made detachable therefrom. The casing C forms an oil receptacle or chamber of suitable size, into which the oil is filled through a bottom aperture, *b*, of the lower section, when the casing is either swung sidewise or removed and inverted.

The bottom aperture *b* of the oil-chamber is provided with a sliding valve, *d*, that is open when the chamber is inverted for filling, but closed when swung back or returned into the receiving-casing B of the axle-box.

The stem of the sliding valve *d* forms contact with the bottom of the casing B, and raises thereby the valve for the discharge of the oil when the oil-chamber is seated in the lower casing. The oil is then taken up by the packing, as required by the revolutions of the journal, no oil being fed when the car is at rest, as the partial vacuum in the chamber keeps the oil suspended therein, but a sufficient quantity being fed by the suction of the packing and the entrance of small quantities of air to the oil-chamber to lubricate the journal when the car is in motion.

The oil-chamber C is fitted, by front and end flanges *f*, tightly on the edges of casing B, while top and rear flanges f^1 of the oil-chamber and a side flange, f^2, of the axle-box close the top and side joints, so as to produce an intimate connection of oil-chamber and axle-box. A considerable quantity of oil may be carried in the oil-chamber, which is conveniently filled by swinging the same sidewise of the lower casing or detaching and turning the same. By returning the oil-chamber the valve prevents the escape of oil until the same forms contact with the bottom of the casing, as shown in Figs. 1 and 3. The closing-flanges of the oil-chamber may also be lined with leather, rubber, or other suitable packing material, to insure the intimate closing of the joints and prevent the entrance of air, so as to secure an economical feed of oil to the journal, in proportion to the needs of the same. The same construction of oil-chamber may also be used for the journal-boxes of shafting of all kinds.

Having thus described my invention, I claim as new and desire to secure by Letters Patent—

The combination, with car-axle box, of the casings B C and sliding valve *d*, all constructed and arranged substantially as and for the purpose specified.

Witnesses: RICHARD B. EASON.
PAUL GOEPEL,
C. SEDGWICK.