Office de la Propriété Intellectuelle du Canada
Un organisme d'Industrie Canada

Canadian Intellectual Property Office
An agency of Industry Canada

CA 2357186 C 2006/01/31

(11)(21) 2 357 186

(12) BREVET CANADIEN
CANADIAN PATENT

(13) C

(22) Date de dépôt/Filing Date: 2001/09/12

(41) Mise à la disp. pub./Open to Public Insp.: 2003/03/12

(45) Date de délivrance/Issue Date: 2006/01/31

(51) Cl.Int.^{7}/Int.Cl.^{7} F04B 53/00, F04D 29/04, F04B 35/04

(72) Inventeurs/Inventors:
GOETTEL, WALTER E., US;
DRUMMOND, ROGER, US;
SHAFFER, RONALD, US;
VARNEY, JAMES, US;
CUNKELMAN, BRIAN, US

(73) Propriétaire/Owner:
WESTINGHOUSE AIR BRAKE TECHNOLOGIES CORPORATION, US

(74) Agent: MACRAE & CO.

(54) Titre : RALLONGE D'ARBRE POUR MECANISMES A PALIER EXTERIEUR
(54) Title: SHAFT EXTENSION FOR USE WITH OUTBOARD BEARING DESIGNS

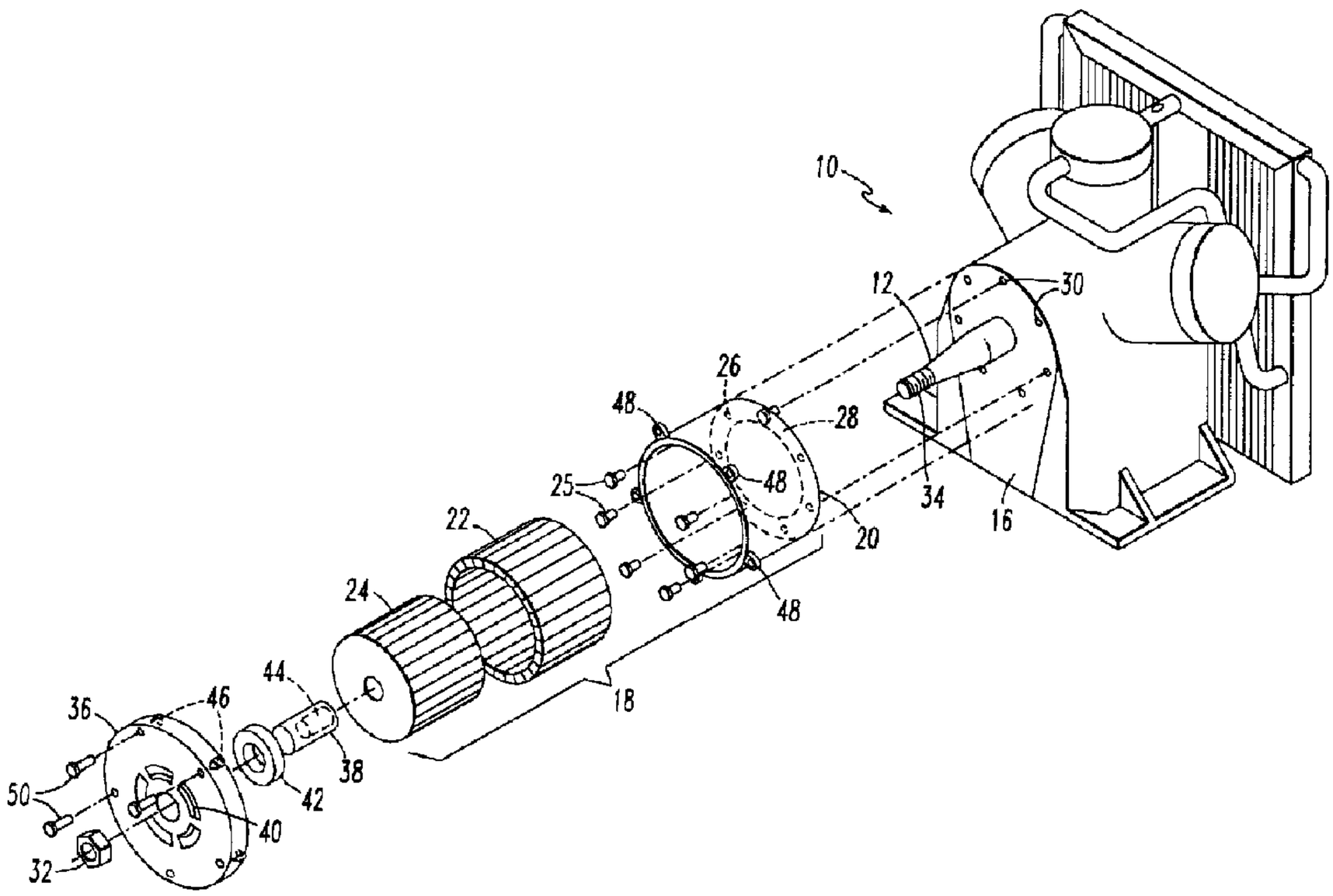

(57) Abrégé/Abstract:
A shaft extension is provided for attachment to a crankshaft of an electric motor driven air compressor to extend the crankshaft for engagement with an outboard rotational bearing. The air compressor includes a bearing plate mounting an inboard rotational bearing, the crankshaft projecting through both the bearing and the bearing plate and terminating in a distal end exterior of the bearing plate. The air compressor includes an electric motor having a stator frame, a stator within the stator frame, and a rotor mounted to the crankshaft for rotation therewith and disposed interior of the stator. The outboard rotational bearing is disposed outboard of the stator frame, the stator, and the rotor. The shaft extension includes an extension member having a major axis and a minor axis transverse to the major axis and a connection mechanism for connecting the extension member to the distal end of the crankshaft.

ABSTRACT OF THE DISCLOSURE

A shaft extension is provided for attachment to a crankshaft of an electric motor driven air compressor to extend the crankshaft for engagement with an outboard rotational bearing. The air compressor includes a bearing plate mounting an inboard rotational bearing, the crankshaft projecting through both the bearing and the bearing plate and terminating in a distal end exterior of the bearing plate. The air compressor includes an electric motor having a stator frame, a stator within the stator frame, and a rotor mounted to the crankshaft for rotation therewith and disposed interior of the stator. The outboard rotational bearing is disposed outboard of the stator frame, the stator, and the rotor. The shaft extension includes an extension member having a major axis and a minor axis transverse to the major axis and a connection mechanism for connecting the extension member to the distal end of the crankshaft.

SHAFT EXTENSION FOR USE WITH OUTBOARD BEARING DESIGNS CROSS-

REFERENCE TO RELATED APPLICATIONS

This application is related to commonly owned: Canadian Patent No. 2,327,023 of January 27, 2004 and entitled "Endplate for Use with Outboard Bearing Designs"; and Canadian Patent Application No. 2,327,028 filed November 21, 2000 and entitled "Combined Bearing Plate and Stator Frame Casting". Additionally the present application is directed to similar subject matter as is disclosed in commonly owned Canadian Patent Application No. 2,326,788 filed November 23, 200 and entitled " Locomotive Air Compressor with and Electric Motor Supported by an External Bearing", and as is disclosed in Canadian Patent No. 2,326,826 of September 2, 2003 and entitled "Locomotive Air Compressor with Motor Supported by Outside Bearing".

FIELD OF THE INVENTION

The present invention relates, in general, to an air compressor that is powered by an electrical motor.

More particularly, the present invention relates to an air compressor, driven by an electrical motor, which is used to supply compressed air to the air brake system of a railed vehicle (e.g., a train or light rail vehicle).

Even more particularly, the present invention relates to a shaft extension which enables an air compressor that supplies compressed air for a braking system and that is driven by an electrical motor to be retrofitted such that the outboard end of the crankshaft of the compressor is supported by a "third" or "outboard" bearing. As explained fully below, the provision and use of such a "third" or "outboard" bearing significantly reduces the possibility that the rotor of the electrical motor will "cant" with respect to the stator of the electrical motor. Such relative angular displacement between the rotor and stator can significantly degrade the performance of the electrically powered air compressor, and can even lead to failure of the combined system.

BACKGROUND OF THE INVENTION

The following background information is provided to assist the reader to understand the invention described and claimed herein. Accordingly, any terms used herein are not intended to be limited to any particular narrow interpretation unless specifically so indicated.

The use of an air compressor to supply compressed air for the operation of an air brake system is well known. In a railed vehicle, the air compressor is typically located in the locomotive of the train, etc. Earlier air compressors for trains were often powered via a power takeoff linkage from the engine of the locomotive. More modern diesel locomotives typically employ electric motors to supply tractive power, with the electrical power being generated onboard. The air compressors of diesel locomotives are, therefore, typically driven by electrical power, which is readily available onboard.

A main compressed air reservoir is normally employed. The main reservoir supplies compressed air to the "brake pipe," which runs the length of the train. The electric motor that drives the air compressor is typically started and stopped on an "as needed" basis, so as to maintain the compressed air pressure in the main reservoir within determined limits. Thus, the electric motor may be

started and stopped repeatedly over the service life of the unit.

Figure 1 is a simplified isometric view of an air compressor unit that is widely employed within the railroad industry for supplying compressed air for use in air braking systems, namely, a "3-CD" Air Compressor manufactured by the Westinghouse Air Brake Company® division of Wabtec Corporation®(1001 Air Brake Avenue, Wilmerding, Pennsylvania). Particulars of the "3-CD" Air Compressor are set forth in a pamphlet entitled "Instructions for Disassembly, Repair and Assembly of '3-CD' Air Compressors," published by the above-identified Westinghouse Air Brake Company® (copyright 1994).

In Figure 1, a "3-CD" air compressor is generally indicated by reference numeral 10. The air compressor 10 includes a crankshaft 12, which is driven by an external power source and which, in turn, drives the internal compression parts of the air compressor 10 (e.g., pistons, valves, etc.). The crankshaft 12 is rotationally supported and positioned by typically two inboard rotational bearings, one such inboard bearing 14 being

shown in phantom in Figure 1. The inboard bearing 14 is supported and positioned by a generally key-shaped bearing plate 16, which also serves to close a portion of the crankcase of the air compressor 10. It will be seen that the crankshaft 12 projects outward from and beyond the bearing plate 16.

Figure 2 illustrates the manner in which an electric motor, generally indicated by reference numeral 18, has heretofore been mated with the air compressor 10, in order to provide power to the air compressor 10. The electric motor generally includes a stator frame 20, a stator 22, and a rotor 24. The stator frame 20 has, in the past, been connected to the exposed face of the bearing plate 16 by bolts 25 which pass through holes 26 provided in an inwardly projecting lip 28 provided on the rearward face of the stator frame 20. The bolts then engage a series of threaded blind holes 30 provided in the outwardly exposed face of the bearing plate 16. The stator frame is therefore "cantilevered" from the exposed face of the bearing plate 16 and secured in this position by the bolts.

The stator frame 20 may be viewed as the "housing" of the electric motor 18, serving to enclose the stationary stator 22 and the rotating rotor 24. The electric

motor 18 is typically an induction type motor, and often a three-phase AC induction type motor. The stator 22 typically includes a plurality of coil windings and is fixedly mounted to the interior surface of the stator frame 20. The rotor 24 non-rotationally engages the protruding portion of the crankshaft 12 (i.e., is fixedly mounted with respect to the crankshaft 12) and is therefore encircled by the fixed stator 22. Typically, the rotor 24 is press fitted onto the crankshaft 12, and a protruding axial spline provided on the interior cylindrical surface of the rotor 24 engages a groove provided on the crankshaft 12.

An endnut 32 may engage a threaded portion 34 provided on the outboard distal end of the crankshaft 12 to axially retain the rotor 24 on the crankshaft 12.

The dimensional difference between the interior diameter of the stator 22 and the exterior diameter of the rotor 24 is relatively small, typically on the order of between about 40/1000 and about 50/1000 of an inch. If the rotor 24 is not maintained in a substantially central alignment with respect to the encircling stator 22, the rotor 24 may come into contact with the stator 22. Such rubbing degrades performance. In severe cases, contact of the rotor 24 with the stator 22 can short out the windings

of the stator 22, thereby "burning out" the electric motor 18.

During startup of the electric motor 18, it has been discovered that a non-symmetric radial force is exerted on the rotor 24, and thus the crankshaft 12. Thus, during startup, forces are exerted on the rotor 24 which tend to "cant" the rotor 24 with respect to the stator 22. Over time in service, these forces can lead to the rubbing described above, and, ultimately, can result in the above-described shorting and burning out of the electric motor 18.

There is disclosed in Canadian Patent Application Serial No. 2,326,788 entitled "Locomotive Air Compressor with an Electric Motor Supported by an External Bearing", and in Canadian patent No. 2,326,826 entitled "Locomotive Air Compressor with Motor Supported by Outside Bearing", various arrangements for providing what is herein referred to as a "third" or (alternatively) an "outboard" bearing. Such a third or outboard bearing provides additional support for the outboard distal end of the crankshaft 12, and considerably prevents (or at least substantially reduces)

any canting of the crankshaft 12 and the rotor 24 attached thereto with respect to the stator 22.

There are an extremely high number of air compressors of the "3-CD" type in service. It is desirable, therefore, to provide an apparatus and method for "retrofitting" such in-service air compressors with such a third or outboard bearing. An apparatus and method for performing such a retrofit are disclosed herein.

Since relatively tight tolerances are required in the alignment between the stator frame 20 (which ultimately determines the positioning of the stator 22) and the crankshaft 12 (which ultimately determines the positioning of the rotor 24), it has heretofore been the practice in the industry to carefully machine both the outwardly exposed face of the bearing plate 16 and the rearward face of the stator frame 20 (i.e., including the inwardly projecting lip 28 provided on the rearward face of the stator frame 20) to relatively exact dimensions, in order to ensure that the rotor 24 remains rather exactly centered with respect to the stator 22.

Such precise machining of the previously separate bearing plate 16 and stator frame 22 is an expensive procedure, and is not always entirely satisfactory in its implementation. A combined bearing plate and stator frame

which eliminates the need for separate machining of the bearing plate and stator frame separately to the aforementioned tight tolerances required, and which provides for substantially increased precise alignment of the rotor 24 within the stator 22 over use in service, is disclosed herein.

OBJECTIVES OF THE INVENTION

Therefore, one objective of the invention is the provision of a shaft extension which will enable an existing electric motor driven air compressor to be retrofitted such that the end of the crankshaft of the air compressor terminates in an outboard rotational bearing, which provides considerable structural support to the crankshaft and considerably reduces the possibility that the air compressor will suffer decreased performance or failure due to the rotor and stator of the electric motor having become canted with respect to one another.

Another objective of the invention is the provision of such a shaft extension which is inexpensive to produce and reliable in operation.

In addition to the objectives and advantages listed above, various other objectives and advantages of the invention will become more readily apparent to persons skilled in the relevant art from a reading of the detailed

description section of this document. The other objectives and advantages will become particularly apparent when the detailed description is considered along with the drawings and claims presented herein.

SUMMARY OF THE INVENTION

The foregoing objectives and advantages are attained by the various embodiments of the invention summarized below.

In one aspect, the invention generally features a shaft extension for attachment to a crankshaft of an electric motor driven air compressor to axially extend the crankshaft for engagement with an outboard rotational bearing. The electric motor driven air compressor includes a bearing plate, an inboard rotational bearing mounted on the bearing plate, the crankshaft projecting through both of the inboard rotational bearing and the bearing plate and terminating in a distal end disposed exterior of the bearing plate. The air compressor also includes an electric motor, the electric motor having a stator frame, a stator fixedly mounted within the stator frame, and a rotor fixedly mounted to the crankshaft for rotation therewith and disposed interior of the stator. The air compressor further includes the outboard rotational bearing disposed axially outboard of the stator

frame, the stator, and the rotor. The shaft extension includes an extension member having an extended major axis and a minor axis extending substantially transverse to the extended major axis and a connection mechanism for connecting the extension member to the distal end of the crankshaft.

In another aspect, the invention generally features, an improvement in combination with an electric motor driven air compressor. The air compressor has a bearing plate and an inboard rotational bearing mounted on the bearing plate, a crankshaft rotationally supported by the inboard rotational bearing, extending through the bearing plate, and terminating in a distal end disposed exterior of the bearing plate. The air compressor additionally includes an electric motor having a stator frame, a stator fixedly mounted within the stator frame, and a rotor fixedly mounted to the crankshaft for rotation therewith and disposed interior of the stator. The air compressor additionally includes an outboard rotational bearing disposed axially outboard of the stator frame, the stator, and the rotor. The improvement includes a shaft extension, which includes an extension member having an extended major axis and a minor axis extending substantially transverse to the extended major axis and a

connection mechanism for connecting the extension member to the distal end of the crankshaft.

BRIEF DESCRIPTION OF THE DRAWINGS

Figure 1 is an simplified isometric view of a "3-CD" type air compressor, of the type described herein.

Figure 2 is an isometric exploded view of a "3-CD" type air compressor equipped with an electric motor according to practices heretofore employed in the industry.

Figure 3 is an isometric exploded view of a "3-CD" type air compressor equipped with an electric motor and provided with a third or outboard bearing.

Figure 4 is an isometric view of an endplate.

Figure 5 is an isometric view of the endplate of Figure 4, viewed from a reverse plane.

Figure 6 is an isometric view of a shaft extension.

Figure 7 is an isometric exploded view of a "3-CD" type air compressor having a combined bearing plate and stator frame, equipped with an electric motor, and provided with a third or outboard bearing.

Figure 8 is an isometric view of a combined bearing plate and stator frame.

Figure 9 is an isometric view of the combined bearing plate and stator frame of Figure 8, viewed from a reverse plane.

DETAILED DESCRIPTION OF THE PREFERRED EMBODIMENTS OF THE INVENTION

Referring now to Figure 3, an apparatus (or "kit") for retrofitting the air compressor 10 with a third or outboard bearing generally includes an endplate 36 and a shaft extension 38. The stator frame 20 is cantilevered from the exposed outboard face of the bearing plate 16 of the air compressor 10 through any suitable means. For example, the stator frame 20 may be secured to the bearing plate 16 through the use of the bolts 25 which pass through the holes 26 formed in the inwardly extending radial lip 28 formed on the rear (i.e., inward) face of the stator frame 20, the bolts 25 terminating in the threaded blind holes 30 formed in the bearing plate 16.

The endplate 36 includes a bearing housing 40, which provides a mounting for a third or outboard bearing 42. The stator 22 is fixedly mounted to the stator frame 20, and the rotor 24 is fixedly mounted to the crankshaft 12, for example, in the conventional manner as described above.

The shaft extension 38 is of general cylindrical shape and includes a threaded blind hole 44 which threads onto the distal end of the crankshaft 12. Thus, the shaft extension extends the crankshaft 12 to a length which is sufficient such that its distal end is rotationally mounted in and positioned by the third or outboard bearing 42.

The endplate 36 is provided with a series of throughgoing holes 46, and a corresponding series of lugs 48 are provided for attachment to the axially outward periphery of the stator frame 20. An equal series of bolts 50 pass through the holes 46 and threadingly engage the lugs 48, thereby securely positioning the endplate 36 with respect to the stator frame 20. Accordingly, the third or outboard bearing 42 is securely positioned with respect to the stator frame 20, and thence to the bearing plate 16.

The apparatus described immediately above with respect to Figure 3, when attached to the arrangement shown in Figure 2, by providing an outboard rotational bearing support for the distal end of the crankshaft 12, substantially reduces any tendency of the rotor 24 to become canted with respect to the stator 22.

Referring now to Figures 4 and 5, the endplate 36, shown in more detail therein, generally includes a cap member, which is preferably provided in the form of disk-shaped portion 52, an outer rim 54 projecting axially from the periphery of the disk-shaped portion 52, and an inner flange 56, axially spaced inward from the outer rim 54. The inner flange 56 is appropriately machined so as to snugly mate with the axially outward edge of the stator frame 20. For example, a mating stepped surface may be machined into each of the corresponding surfaces. The throughgoing holes 46 are preferably provided in stanchions 58 located generally between the outer rim 54 and the inner flange 56. The bearing housing 40 is preferably provided in the form of an collar 60 projecting inwardly from the disk-shaped portion 52, which is preferably provided with reinforcing ribs 62 and ventilation openings 64.

Referring now to Figure 6, the shaft extension 38 is generally cylindrical in form and is preferably provided with a tool engaging portion 66 (for example, in the form of opposing flats or a hexagonal head) to allow torque to be applied thereto for threading on/off the threaded portion 34 of the crankshaft 12. As noted above, the

blind hole 44 is internally threaded, as through the provision of internal threads 68.

Figure 7 illustrates the use of a combined bearing plate and stator frame, generally designated by reference numeral 70, in the air compressor 10. While it is not a requirement that the combined bearing plate and stator frame 70 be used in combination with the endplate 36 and third or outboard bearing 42 in order to rotatingly support the distal end of the crankshaft 12, this is the preferred combination. However, the combined bearing plate and stator frame 70 could be used alone, and would still provide the advantage of not requiring that the bearing plate and stator frame be machined to the required tight tolerances separately.

When the combined bearing plate and stator frame 70 is employed, as shown by reference numeral 72 in Figure 7, the crankshaft 12 is preferably provided with an additional extended length as compared to the length currently practiced in the industry. The crankshaft 12, which is usually produced as a single casting, is therefore preferably of an elongated length when using the combined bearing plate and stator frame 70. However, the combined bearing plate and stator frame 70 may still be used with a conventional length crankshaft 12, if, as

shown optionally in Figure 7, the shaft extension 38 shown most particularly in Figure 6 is used to extend the length of the crankshaft 12.

Preferably, the combined bearing plate and stator frame 70 is produced as a single casting which is then machined to the required tolerances for connection to the air compressor 10 and for the attachment of the endplate 36 and other components thereto.

Referring now most particularly to Figures 8 and 9, the combined bearing plate and stator frame 70 generally includes a cylindrical-shaped or bowl-shaped stator frame portion 74 and a bearing plate portion 76. The bowl-shaped stator frame portion 74 includes a cylindrical wall portion 78, one end of which 80 is open for receiving the stator 22, and an end wall 82, which partially encloses the other end of the cylindrical wall portion 78. The bearing plate portion 76 abuts, overlays, and is integrally formed with the end wall 82. An aperture 84 is formed in the end wall 82 and is encircled by a bearing receptacle 86, preferably provided in the form of an outstanding collar 88. The bearing plate portion 76 preferably includes a horseshoe-shaped portion 90, which surrounds both the aperture 84 and the bearing receptacle 86, and a wedge-shaped portion 92, which

extends radially outward from the horseshoe-shaped portion 90.

The lugs 48 extend radially from the cylindrical wall portion 78 adjacent the open end 80, allowing the endplate 36 to be secured to the combined bearing plate and stator frame 70 through use of the bolts 50.

The combined bearing plate and stator frame 70 is dimensioned to be fitted into the open space shown by reference numeral 94 in Figure 7, where a conventional bearing plate 16 of the air compressor 10 would be normally accommodated. The conventional inboard bearing 14 of the air compressor 10 is mounted in the bearing receptacle 86 formed on the inboard face of the combined bearing plate and stator frame 70.

While the present invention has been disclosed by way of a description of a particularly preferred embodiment or a number of particularly preferred embodiments, it will be readily apparent to those of ordinary skill in the art that various substitutions of equivalents can be effected without departing from either the spirit or scope of the invention as set forth in the appended claims.

CLAIMS

What is claimed is:

1. A shaft extension for attachment to a crankshaft of an electric motor driven air compressor to axially extend such crankshaft for engagement with an outboard rotational bearing, such electric motor driven air compressor including a bearing plate, an inboard rotational bearing mounted on such bearing plate, such crankshaft projecting through both of such inboard rotational bearing and such bearing plate and terminating in a distal end disposed exterior of such bearing plate, and an electric motor, such electric motor including a stator frame, a stator fixedly mounted within such stator frame, and a rotor fixedly mounted to such crankshaft for rotation therewith and disposed interior of such stator, such air compressor additionally including such outboard rotational bearing disposed axially outboard of such stator frame, such stator, and such rotor, said shaft extension comprising:

an extension member having an extended major axis and a minor axis extending substantially transverse to said extended major axis; and

connection means for connecting said extension member to such distal end of such crankshaft.

2. A shaft extension for attachment to a crankshaft of an electric motor driven air compressor, according to Claim 1, wherein:

said extension member is substantially axially symmetric about said major axis.

3. A shaft extension for attachment to a crankshaft of an electric motor driven air compressor, according to Claim 1, wherein said connection means includes a blind hole extending along said major axis of said extension member.

4. A shaft extension for attachment to a crankshaft of an electric motor driven air compressor, according to Claim 1, wherein said extension member includes a substantially cylindrical peripheral portion.

5. A shaft extension for attachment to a crankshaft of an electric motor driven air compressor, according to Claim 1, further comprising a torque transferring portion formed on said extension member.

6. In combination with an electric motor driven air compressor, said air compressor including a bearing plate and an inboard rotational bearing mounted on said bearing plate, a crankshaft rotationally supported by said inboard rotational bearing, extending through said bearing plate, and terminating in a distal end disposed exterior of said bearing plate, and an electric motor, said electric motor including a stator frame, a stator fixedly mounted within said stator frame, and a rotor fixedly mounted to said crankshaft for rotation therewith and disposed interior of said stator, said air compressor additionally including an outboard rotational bearing disposed axially outboard of said stator frame, said stator, and said rotor, the improvement comprising:

a shaft extension, said shaft extension including:

an extension member having an extended major axis and a minor axis extending substantially transverse to said extended major axis; and

connection means for connecting said extension member to such distal end of such crankshaft.

7. In combination with an air compressor, the improvement according to Claim 6, wherein:

said extension member is substantially axially symmetric about said major axis.

8. In combination with an air compressor, the improvement according to Claim 6, wherein said connection means includes a blind hole extending along said major axis of said extension member.

9. In combination with an air compressor, the improvement according to Claim 6, wherein said extension member includes a substantially cylindrical peripheral portion.

10. In combination with an air compressor, the improvement according to Claim 6, further comprising a torque transferring portion formed on said extension member.

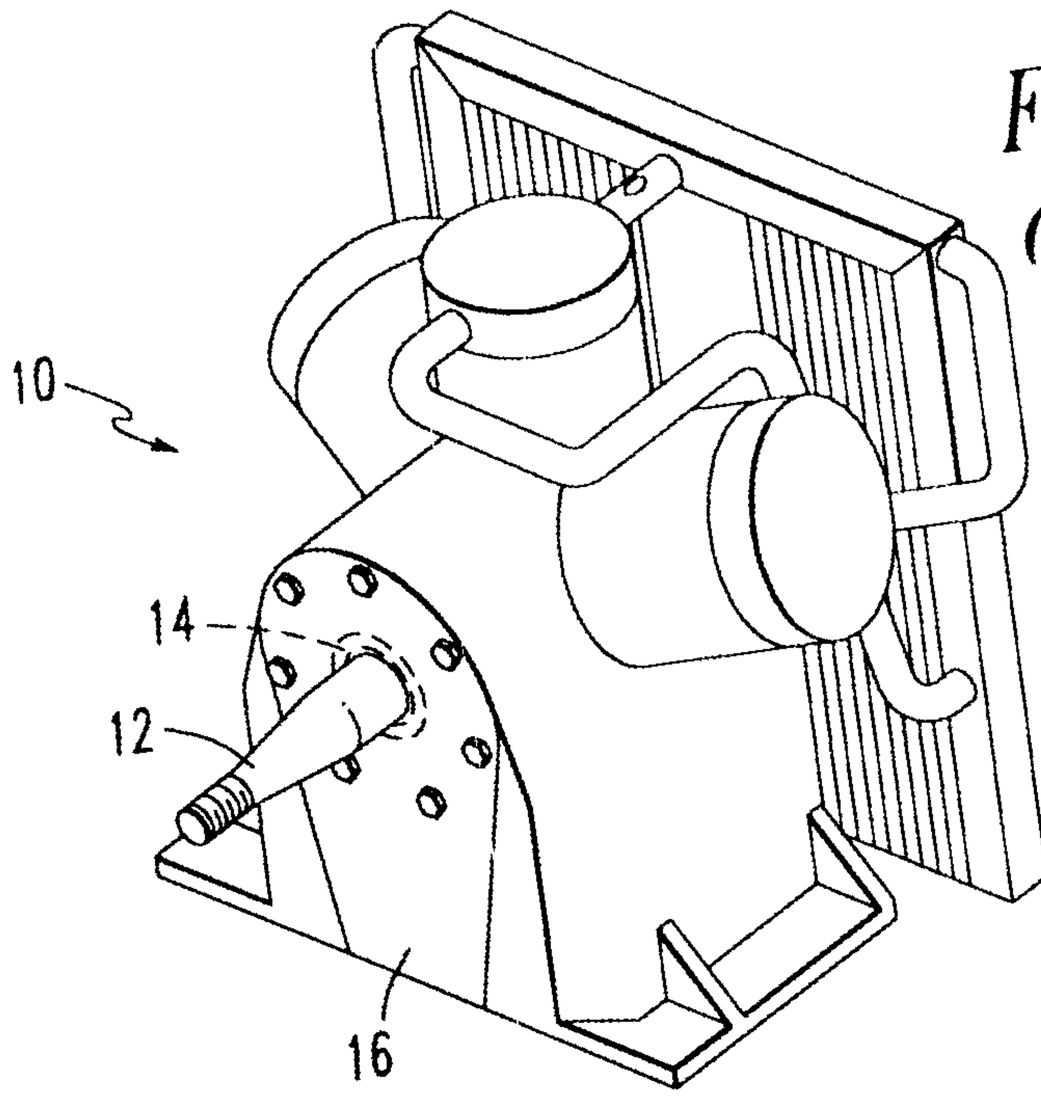

FIG. 1
(PRIOR ART)

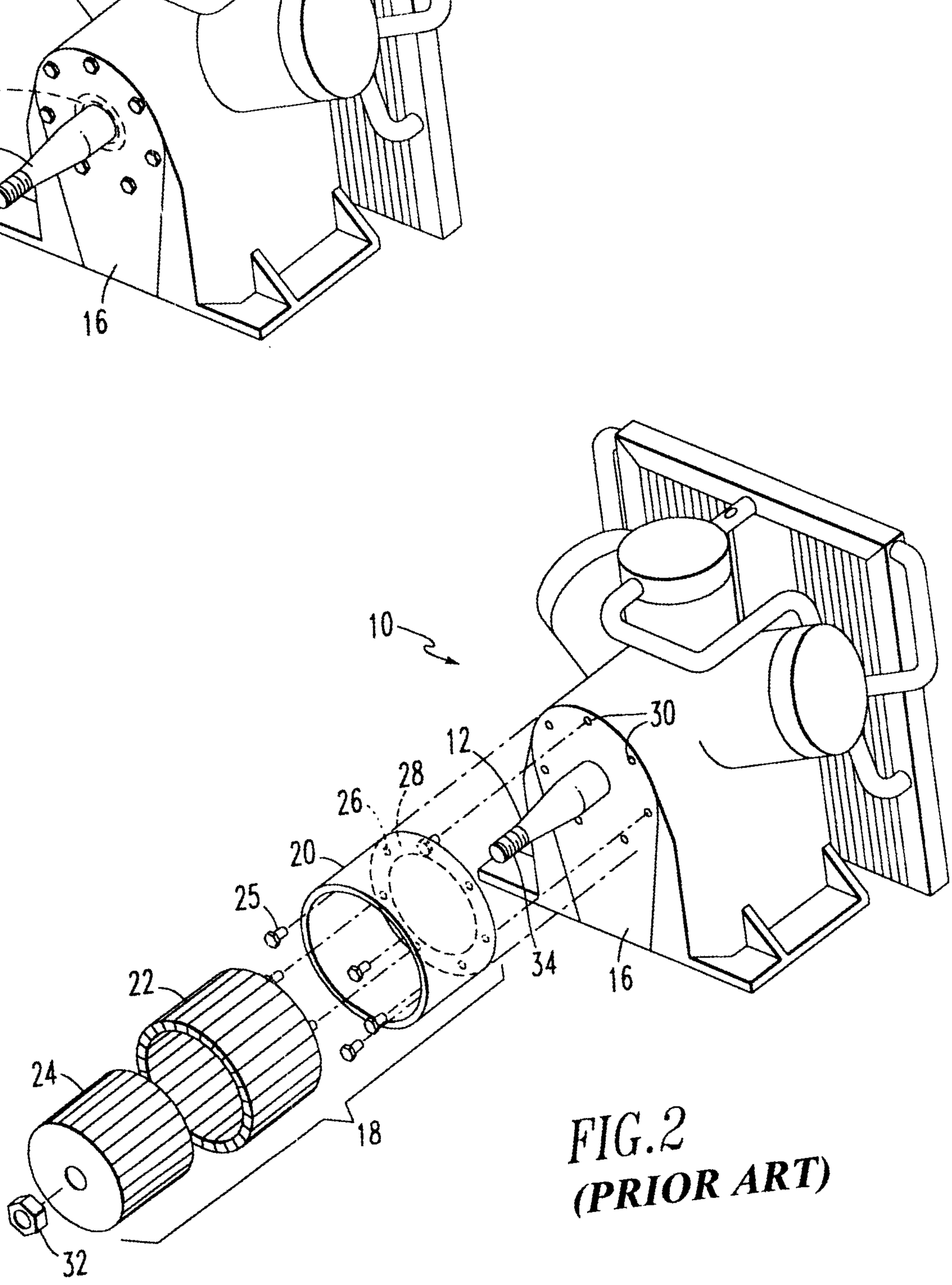

FIG. 2
(PRIOR ART)

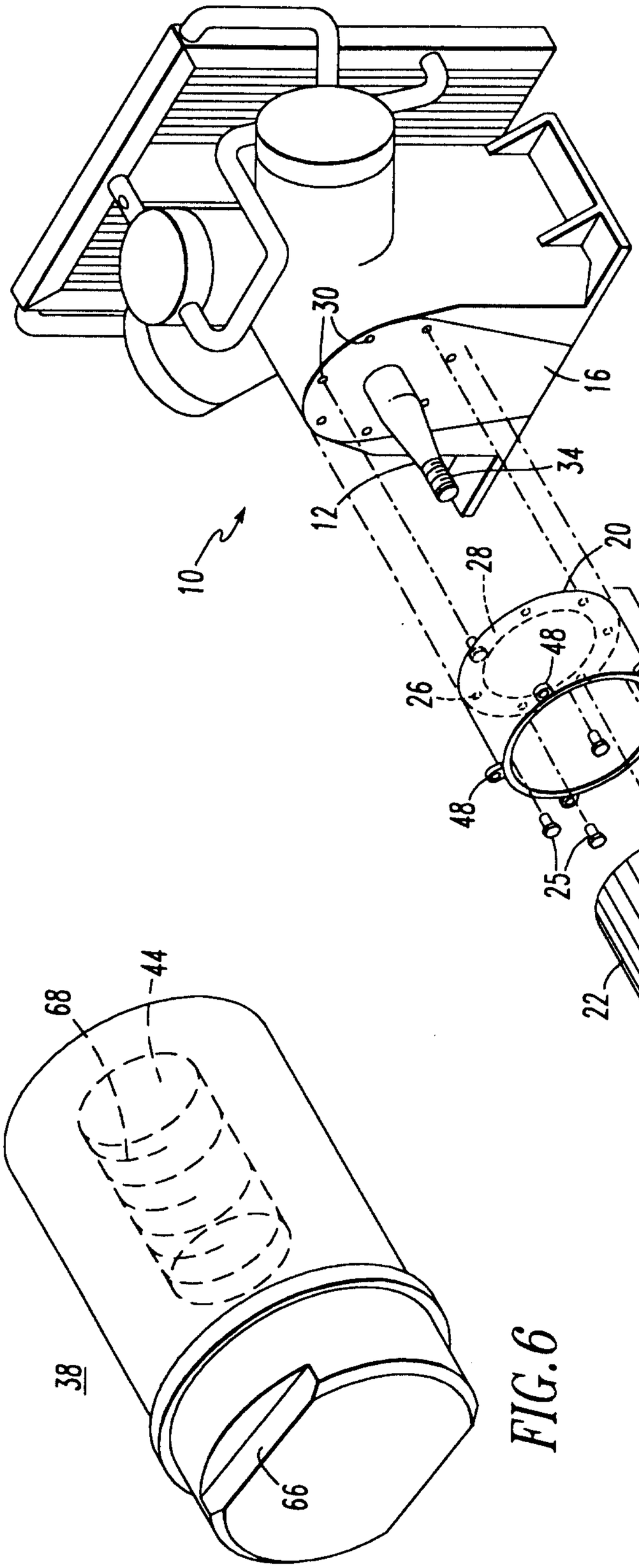
10
12
16
18
20
22
24
25
26
28
30
32
34
36
38
40
42
44
46
48
50

FIG. 3

38
44
66
68

FIG. 6

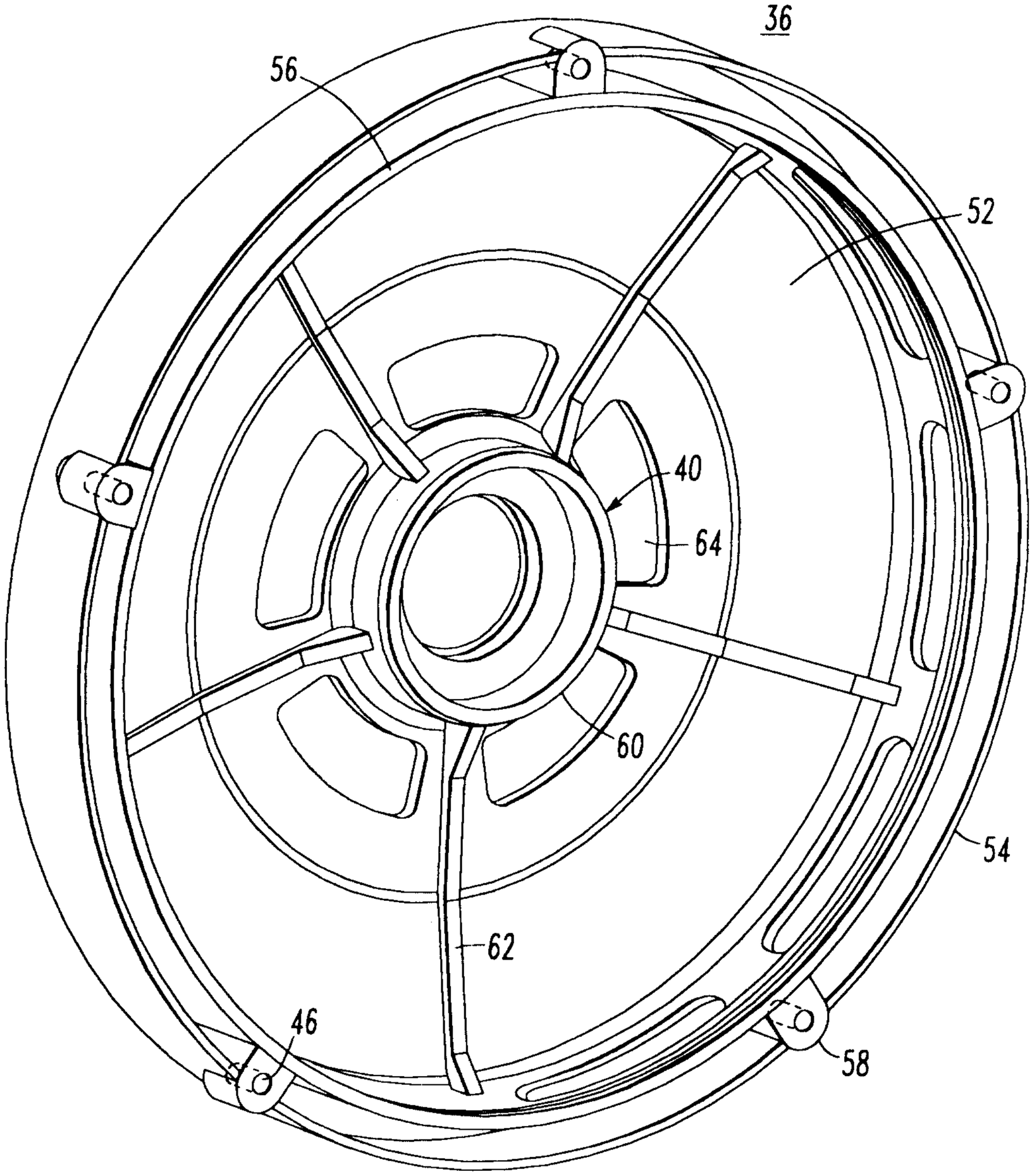

FIG.4

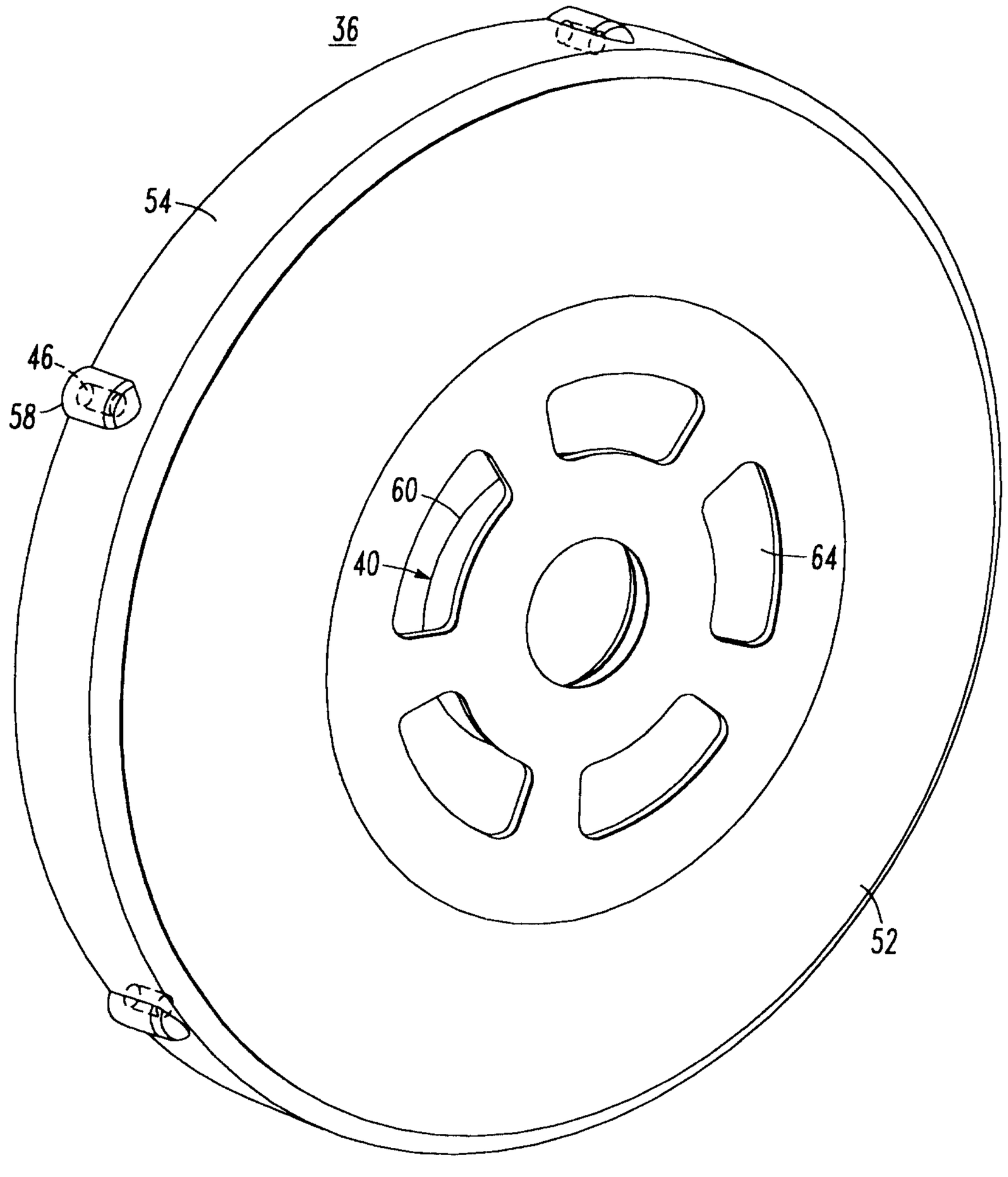

FIG.5

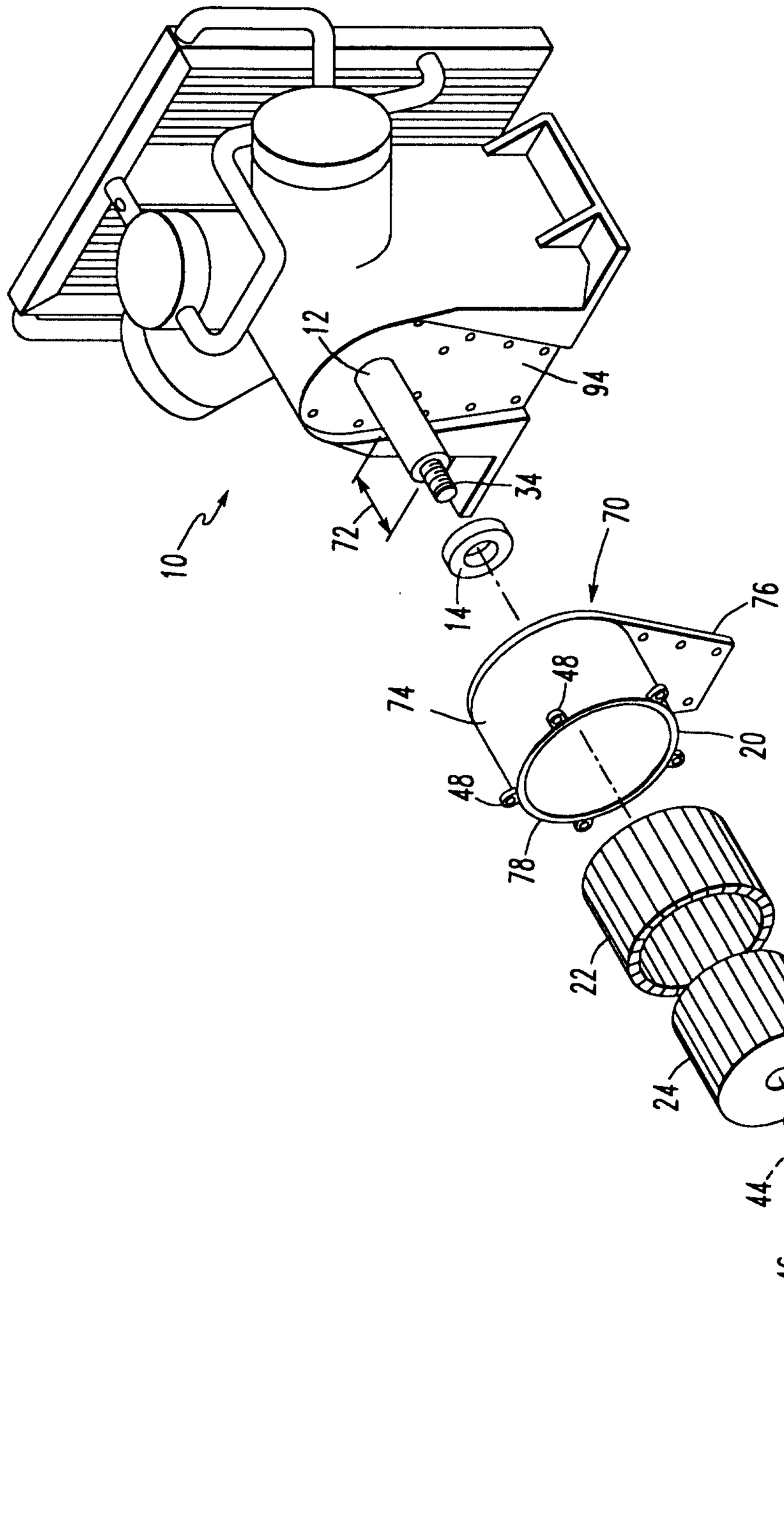

FIG. 7

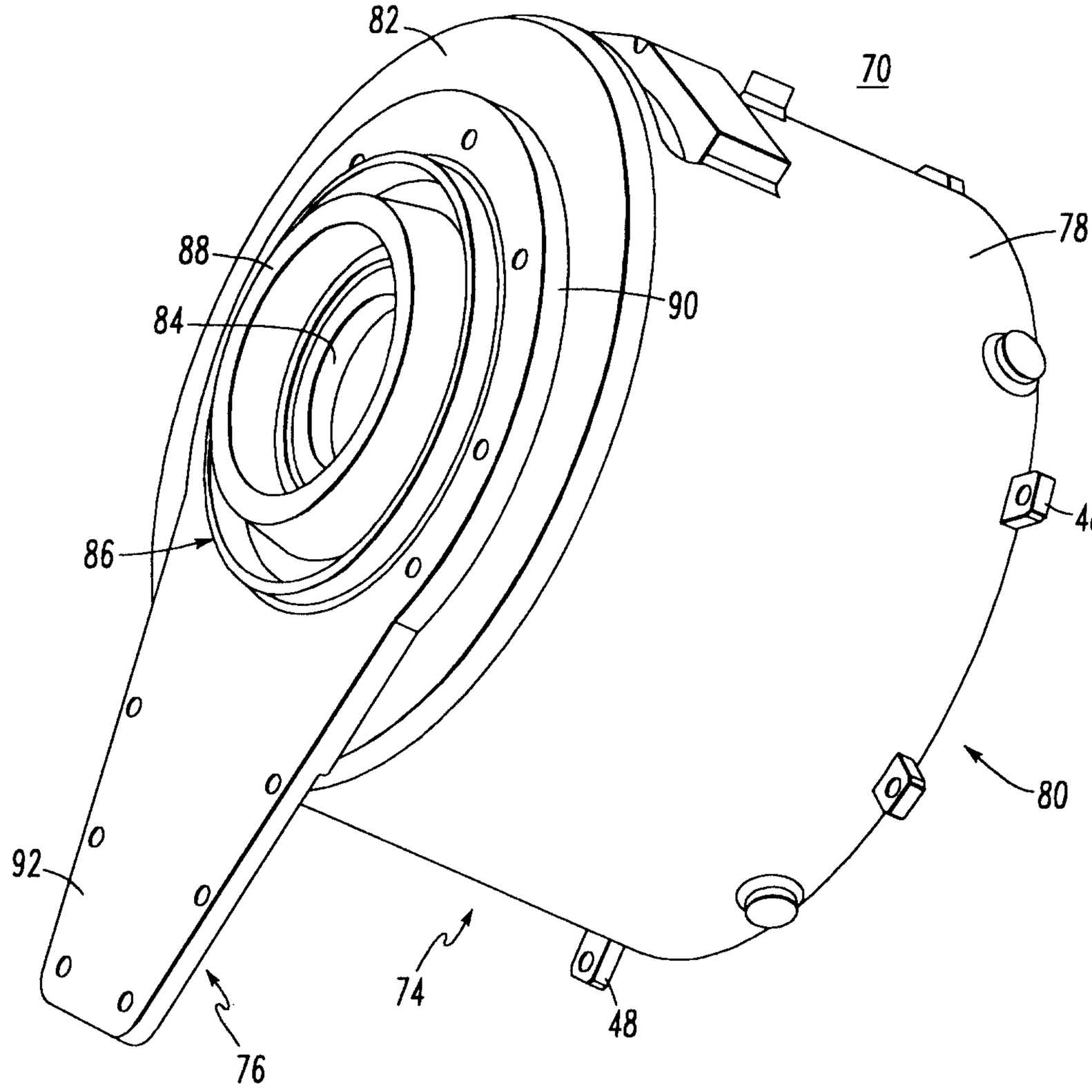

FIG.8

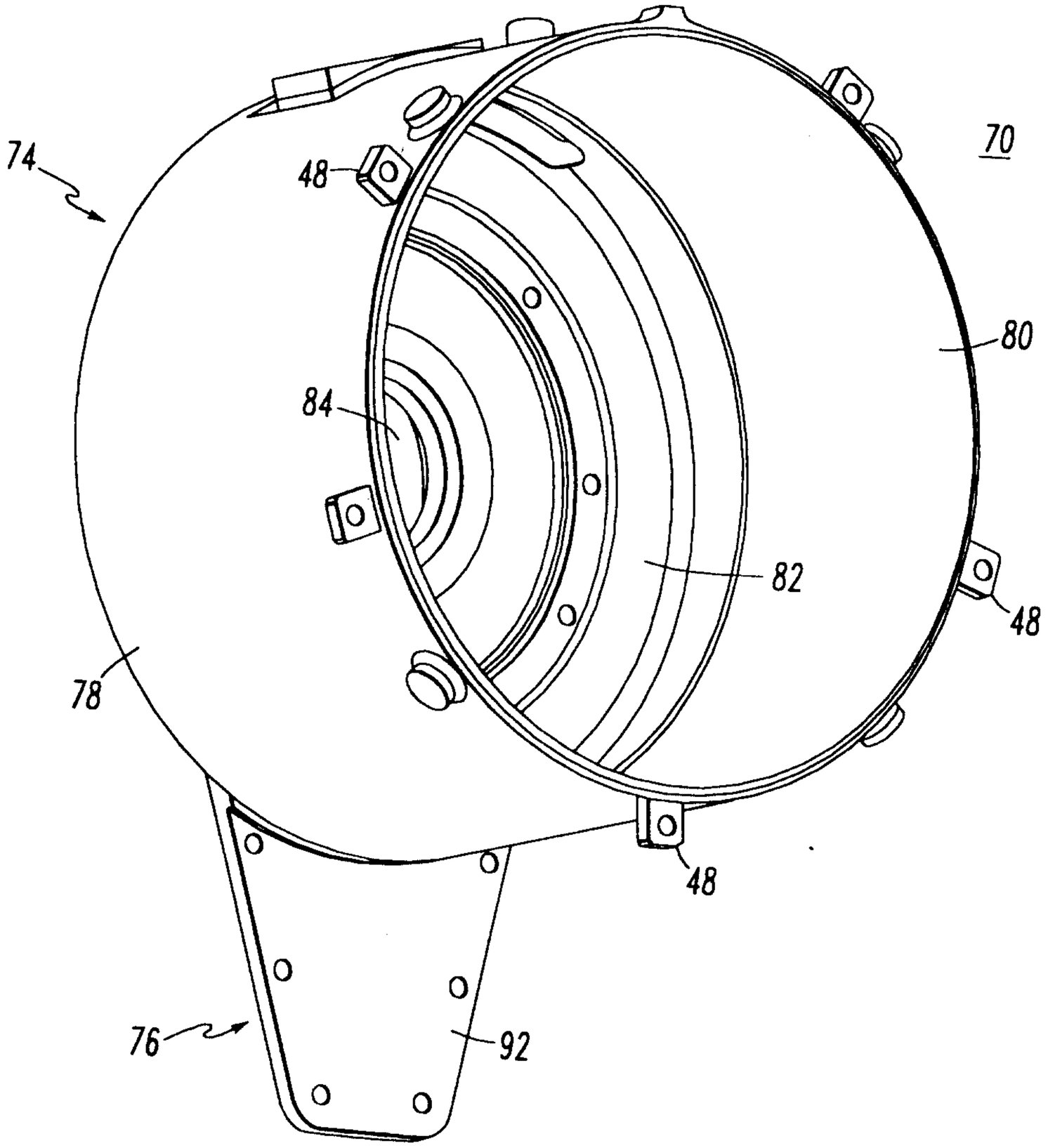

FIG. 9

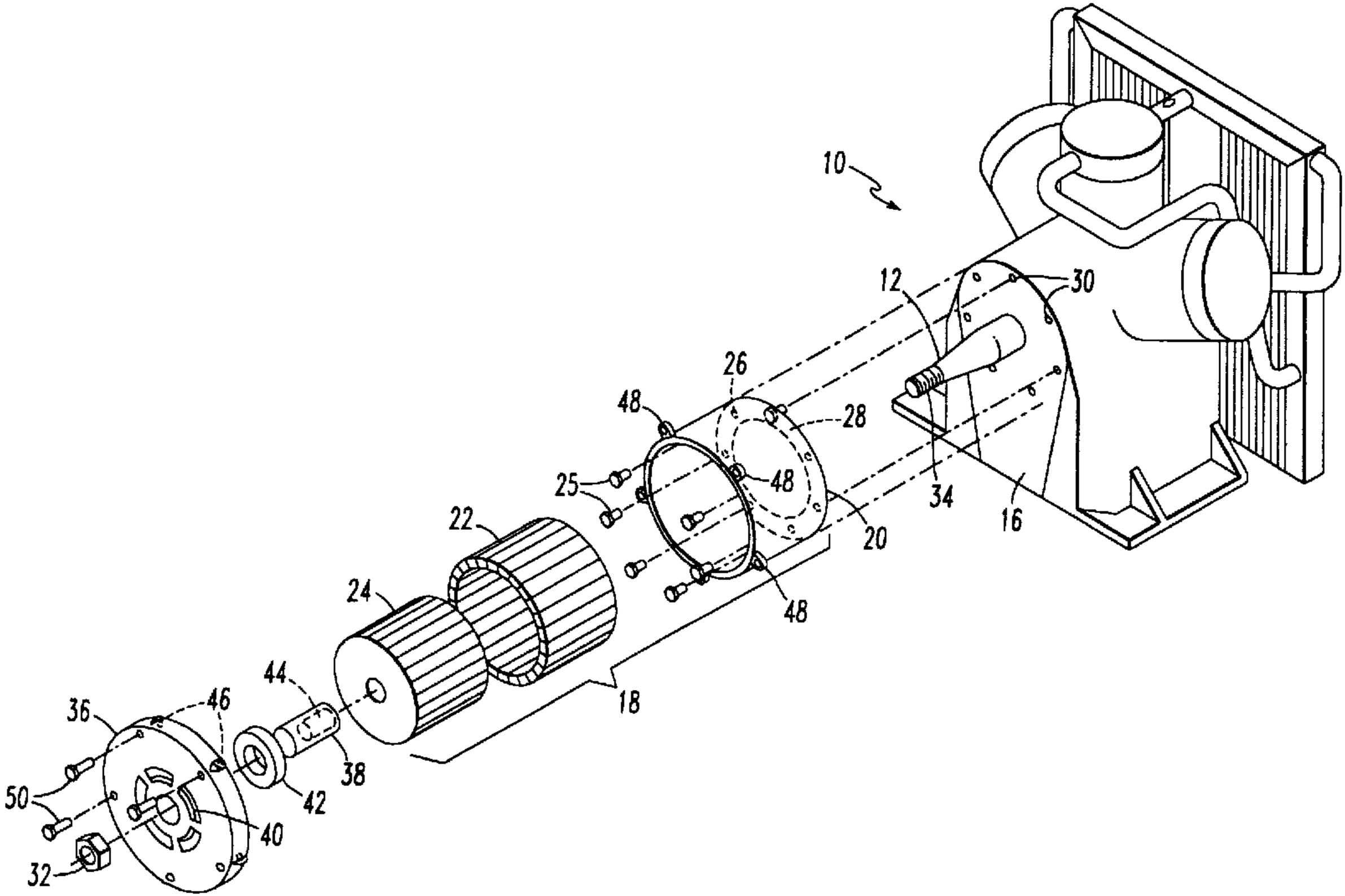
10
12
30
26
48
28
25
48
22
34
16
20
24
48
44
18
36
46
38
50
42
40
32