H. S. BRETTON.

CONTAINER.

APPLICATION FILED JULY 8, 1913. RENEWED NOV. 26, 1917.

1,252,543.

Patented Jan. 8, 1918.

2 SHEETS—SHEET 1.

Fig. 1.

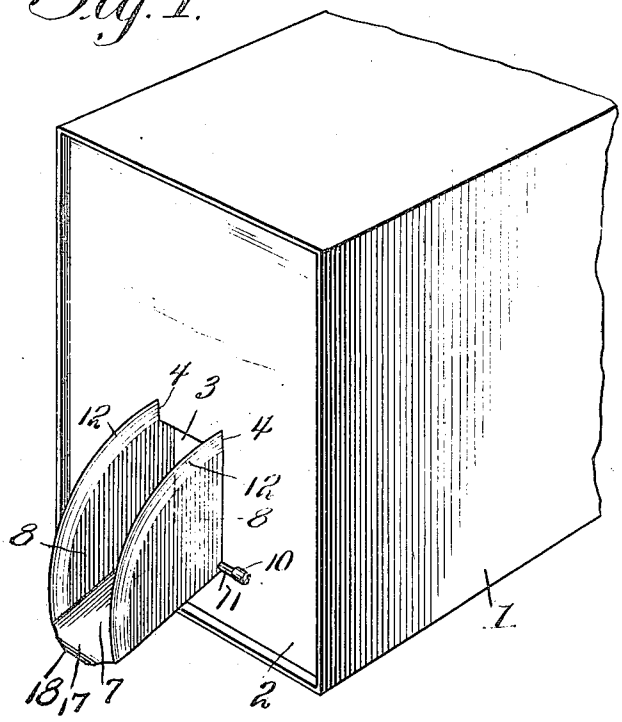

Fig. 2.

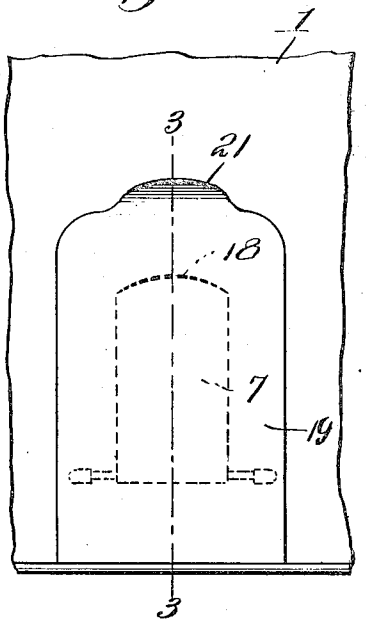

Fig. 3.

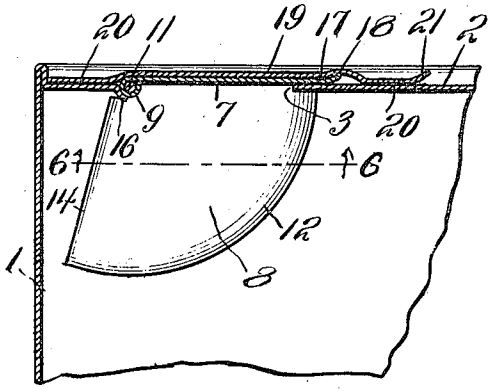

Fig. 4.

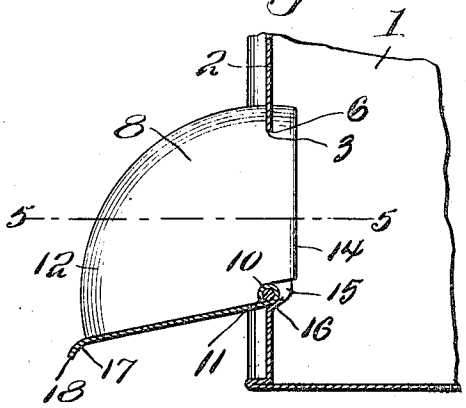

Inventor

Harry S. Bretton.

Witnesses

J. T. L. Wright

A. C. Hines.

By Burnett & Jones

Attorney

H. S. BRETTON.

CONTAINER.

APPLICATION FILED JULY 8, 1913. RENEWED NOV. 26, 1917.

1,252,543.

Patented Jan. 8, 1918.

2 SHEETS—SHEET 2.

Fig. 5.

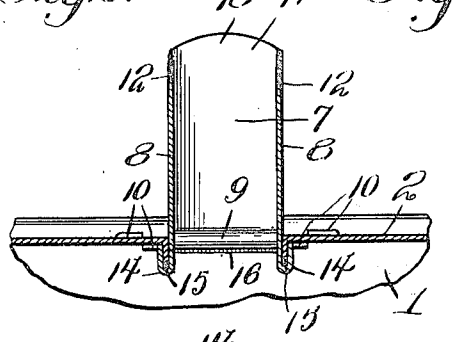

Fig. 6.

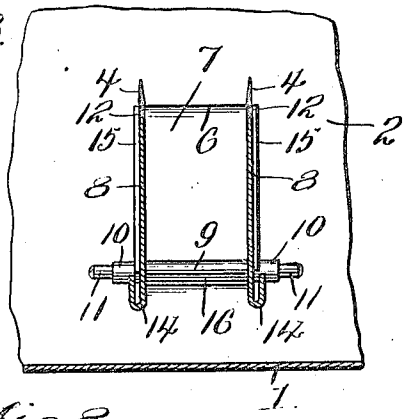

Fig. 7.

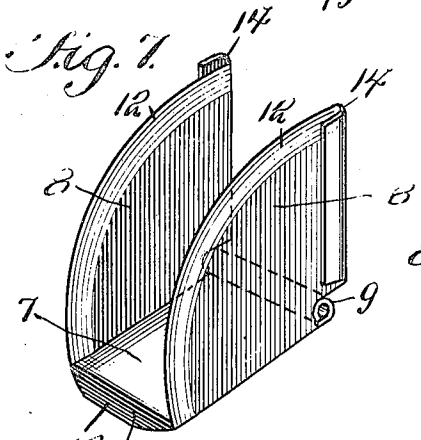

Fig. 8.

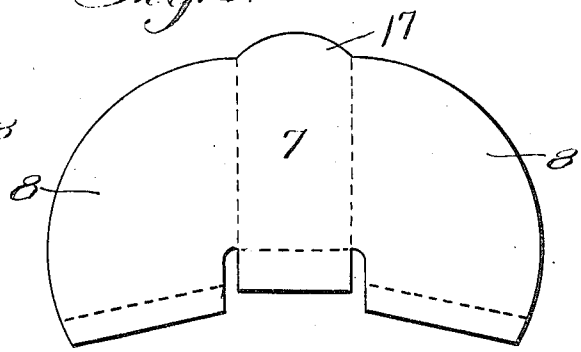

Fig. 9.

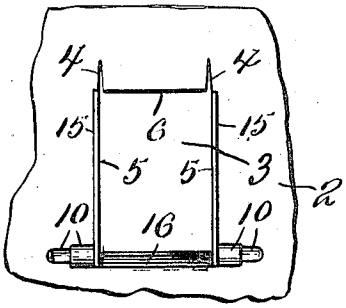

Fig. 10.

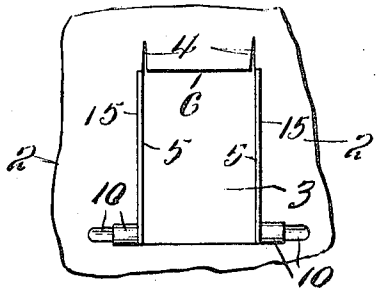

Inventor

Harry S. Bretton

Witnesses

J. L. Wright.

A. A. Hines.

By Bennett & Jones

Attorney

UNITED STATES PATENT OFFICE.

HARRY S. BRETTON, OF NEW YORK, N. Y., ASSIGNOR TO ASA H. ANDREWS, JR., OF AURORA, ILLINOIS.

CONTAINER.

1,252,543. Specification of Letters Patent. Patented Jan. 8, 1918.

Application filed July 8, 1913, Serial No. 777,838. Renewed November 26, 1917. Serial No. 204,095.

To all whom it may concern:

Be it known that I, HARRY S. BRETTON, a citizen of the United States, residing at New York, in the county of New York and State of New York, have invented certain new and useful Improvements in Containers, of which the following is a specification.

My invention relates to containers made of metal or other suitable material, and particularly to combined seals or closures and pouring spouts or lips for cans or other receptacles designed for holding viscous or heavy liquids, and one of its objects is to provide a combined closure and pouring spout adapted to close within the plane of the surface of the container to which it is attached and which, when opened, will form an efficient pouring spout or lip whereby the contents of the receptacle may be discharged, which combined closure and spout is adapted when closed to securely seal the receptacle against evaporation or escape of the contents and against the entrance of dirt, insects or other foreign matter, and to further protect the contents from the drying effect of air.

A still further object of the invention is to provide a closure and spout of the character described which embodies surfaces adapted for engagement with surfaces on the body of the container whereby a close sealing engagement is secured when opened up as a spout or closed down as a seal or closure.

A still further object of the invention is to provide a pivoted, sector-shaped closure and spout having flanges or side walls provided with comparatively thin or reduced edges movable through guide notches in the coacting wall of the container and adapted to close within receiving flanges on the container in such manner as to practically hermetically seal the container when the said combined seal and closure is in closed position.

A still further object of the invention is to provide simple and effective means for preventing undue movement of the combined seal and closure on its pivot, to adapt said combined seal and closure to always move within a determined plane, and to prevent loosening of the hinge, as well as to effect a closure around the hinge forming portions to minimize or prevent leakage between the same.

A still further object of the invention is to provide a combined seal and spout of the character described, which is neat, sanitary, adapted to be inexpensively made and applied from the underside in the process of manufacture so as to reduce cost of assemblage, and which may be employed in conjunction with containers of different forms or shapes.

With these and other objects in view, which will appear as the nature of the invention is better understood, the invention consists of the novel features of construction, combination and arrangement of parts hereinafter fully described and claimed, reference being had to the accompanying drawings, in which:

Figure 1 is a perspective view of a container embodying my invention, showing the combined seal and pouring spout in open or discharge position;

Fig. 2 is an elevation of the container, showing the combined seal and pouring spout closed and the sealing strip applied;

Fig. 3 is a section on the line 3—3 of Fig. 2;

Fig. 4 is a sectional view similar to Fig. 3, showing the combined seal and pouring spout in discharge position;

Fig. 5 is a vertical transverse section on the line 5—5 of Fig. 4;

Fig. 6 is a section on line 6—6 of Fig. 3;

Fig. 7 is a perspective view of the combined seal and closure *per se.*

Fig. 8 is a plan view of the blank from which the same is made;

Fig. 9 is an interior elevation looking toward the outlet; and

Fig. 10 is a similar view, showing a modification.

Referring to the drawings, 1 designates a can or container of any desired form and size, and of a type commonly used for containing and dispensing olive and other oils, varnishes and other like substances. One of the walls 2 of this container is provided with a discharge outlet 3. This outlet 3 comprises an opening of oblong rectangular form made by cutting out a portion of the wall 2, and, as shown, the said wall 2 is provided with guide notches 4 which intersect the relatively inner end of the opening in line with its side walls 5 after the marginal edges thereof are turned inwardly to

form the sealing flanges hereinafter described, and which extend inwardly beyond its inner end wall 6.

The outlet opening 3 is adapted to be sealed by a combined closure and spout comprising a piece of sheet metal or material of the form shown in Fig. 8 stamped up to provide a central plate or body portion 7 and side walls 8. The plate or body portion 7 is of a form and dimensions corresponding to the opening 3 and is adapted to snugly fit therein and seal said opening when the said combined closure and spout is in closed position. At its outer edge, the plate 7 is formed with a knuckle 9 arranged in alinement with knuckles 10, through which knuckles a pintle or pin 11 is passed, thus hinging or pivoting the said combined closure and spout to swing or tilt upon said pin as an axis.

The walls 8 are triangular or sector-shaped and have their vertices coinciding with the axis 11, and said walls form with the body or plate 7 a tilting, sector-shaped, triangular or trough-shaped spout whereby the contents of the can may be served or poured out in a neat and cleanly manner, and without liability of such contents dripping or spilling over onto the body of the can. When the combined closure and spout is in open position, as shown in Figs. 1 and 4, it projects outwardly substantially at right angles to the wall 2, thus enabling the contents of the can, when said can is properly tilted, to be poured out. When the combined closure and spout is in closed position, as shown in Figs. 2, 3 and 6, the plate 7 occupies the opening 3 and lies substantially flush with the wall 2, while the walls 8 disappear or project into the can, the combined closure and spout as a whole, therefore, disappearing or closing within the confines of the can and within (interiorly of) the plane of the wall 2 or surface of the can to which said combined closure and spout is attached.

The curved edges 12 of the walls 8 move in the guide notches 4 and are thus positively guided in their movements to prevent lateral movements of the combined closure and spout and to maintain said walls 8 in close contact with the walls 5 to seal the sides of the outlet 3 against the escape of the contents of the can and the entrance of dust, dirt, etc. These edges 12 are beveled down, thinned or tapered to knife edges, so that they will free the notches 4 of any material tending to clog therein and so that they will also enable guide notches of comparatively restricted width to be used, and the walls of the notches and the surfaces 8 to be accurately fitted in order to avoid entrance of air or leakage of the contents at this point. I may, however, omit the beveled surfaces and have the edges 12 of the same thickness as the material of the walls 8.

As shown, the inner free edges of the walls 8 have flanges or portions 14 facing forwardly and bent parallel with said walls to provide hook-shaped flanges, which flanges are adapted for coaction with inwardly-extending resilient flanges 15 bent inwardly from the side walls 5 of the opening 3. The flanges 15 normally bear against the walls 8 and act as wipers or clearers to free the same from any particles of the substance contained within the can which may cling thereto, thus clearing the outer surfaces of the side walls 8 when the spout is moved outwardly to discharge position. The flanges 15 are also adapted to be engaged by the flanges 14 and to be received and inclosed thereby when the combined seal and closure is opened, thus securely sealing or closing the spaces or crevices between the walls 5 and walls 8 to positively prevent any escape of the confined material at such points when the combined seal and spout is opened. It will further be seen that these flanges are also adapted to interlock together, thus firmly and rigidly supporting the combined seal and closure when opened and relieving the hinge pin or pintle from any strain which might otherwise fall thereon. The combined seal and closure will, accordingly, be positively guided in its opening and closing movements, prevented from wabbling or playing laterally on its hinge, and the hinge stayed or reinforced against all strain, thus obviating any possibility of loosening of the parts and leakage through the outlet when the combined seal and closure is closed.

It will further be seen, from the foregoing description, that the interlocking flanges serve as steps to limit the outward movement of the combined closure and spout, so that when the latter is tilted outwardly to discharge position it will, as a whole, be arranged substantially at a right angle to the wall 2, while the plate 7, forming in this operation the bottom of the trough-shaped spout, will have a somewhat greater angle of inclination in order to facilitate the outflow of the contents. For the purpose of further staying and reinforcing the hinge joint, I may form the outer end wall of the opening 3 with a lap flange 16 curved to overhang the knuckle 9, so as to close the space between said knuckle and the lower end wall of the outlet 3 against the admission of air or leakage of the contents, while providing a resilient member which maintains a constant frictional bearing contact against the hinge knuckle 9 to reinforce the hinge while at the same time holding the combined seal and spout in its fully opened, fully closed or any intermediate stage of adjustment. The outer or free end wall 17 of the plate 7 is provided with a thumb or finger-piece or projection 18 which is offset outwardly or made of concavo-convex form, so that, when the combined seal and spout is in closed position, the

said projection 18 will abut against the outer surface of the wall 2 and limit the inward movement of said combined seal and spout, while at the same time being so disposed as to permit the nail of the thumb or finger to be inserted thereunder to enable the combined seal and spout to be conveniently opened. In some cases the flange 16, the use of which is preferred, may be omitted as shown in Fig. 10.

From the foregoing description it will be apparent that the invention provides a device which, when open, will project and form a pouring lip or spout whereby the contents of the can or receptacle may be conveniently and cleanly discharged, and which, when closed, will lie wholly within the can or receptacle and flush with the outer surface thereof, thus sealing the outlet against leakage, evaporation or drying out of the contents from the effects of air, as well as the entrance of dust, dirt and insects, while permitting the can or receptacle to be packed in close engagement with others of its kinds for storage, shipment or display. The conveniences of the device in providing a seal or closure which serves as a pouring spout when opened and disappears into and lies flush with the outer surface of the receptacle when closed will be readily apparent and it will be seen that the present invention provides special reliable and efficient means for reinforcing the combined seal and closure at all times, staying and reinforcing the hinge and relieving it from excess strain and removing from the combined seal and closure any portion of the contents of the can which may adhere to the side walls thereof. While, in the present instance, I have shown the application of the invention to one of the flat side walls of a rectangular can or receptacle, it is to be understood that the invention may be applied to other forms of receptacles, such as to the depressed end walls of condensed milk cans and the like, and that accordingly the invention is not restricted in its application to any particular type of container or receptacle.

For greater security in sealing the outlet and preventing possible accidental opening of the combined seal and spout until the container is to be opened for use of its contents, an auxiliary sealing device 19 may be employed, the same consisting of a strip of soft brass or other soft (malleable) metal or material of sufficient dimensions to overlie and cover the outlet and combined seal and spout. This strip is secured to the wall 2 all around the opening 3 by means of soft solder or a suitable cement 20 so as to hermetically close the outlet and hold the combined seal and spout against opening movement. At one end said strip is provided with a finger tab 21 by which it may be gripped and removed when it is desired to open the can, the soft solder or character of cement employed permitting of said strip being clearly detached. This strip enables the receptacle to be safely packed and shipped and kept hermetically sealed for an indefinite period and it further serves as a protection against fraud or refilling, as visual evidence will be given of any displacement of the strip or its removal and replacement or the substitution of another strip.

Having thus described my invention, what I claim is:—

1. A container having a discharge opening and guide notches at one end of said opening in alinement with the side walls thereof, and a closure for said opening pivoted to the opposite end wall thereof, said closure comprising a body plate having rigid side walls to form a pouring spout, said side walls of the closure being provided with longitudinally-curved, beveled-edge projections extending on an arc concentric with the pivot and movable within said guide notches.

2. A container having an opening therein, straight flanges extending inwardly in parallel relation from the side walls of the opening, a combined closure and spout hinged or pivoted to said container and movable within said opening, and portions upon the side walls of the spout bent forwardly from the ends thereof to provide hook-shaped flanges adapted to receive and interlock with said straight flanges when said combined closure and spout is moved outwardly to open position.

3. A container having an opening, a combined closure and spout pivotally supported for movement within said opening, and interengaging flanges upon the container and combined closure and spout adapted to interlock when the said combined closure and spout is open to reinforce the same and seal the sides of the opening against the escape of the contents of the container.

4. A container having a discharge opening, flanges along the side walls of said opening, a combined closure and spout hinged or pivoted to swing through said opening, said combined closure and spout including side walls and flanges upon the inner edges of said side walls disposed parallel with said side walls and adapted to receive and engage the flanges on the container when said combined closure and spout is opened.

5. A container having a discharge opening provided with parallel side walls, a sector shaped combined closure and spout pivoted to one of the end walls of the opening to swing therethrough, said closure comprising a bottom or body plate and side walls rigid therewith, inwardly extending longitudinal flanges at the side walls of the

opening disposed parallel with the side walls of the closure and having free edges acting as wipers thereon, and stop members at the rear ends of said side walls of the closure adapted for engagement with said wiper flanges to limit the outward motion of the receptacle.

6. A container having a discharge opening, a sector-shaped spout pivotally mounted at its vertex at one end of the opening to swing therethrough, said spout comprising a body or bottom plate and side walls rigid therewith, said side walls having rear edges with forwardly bent flanges adapted to come substantially in parallel relation to the side walls of the opening when the spout is swung outwardly, and coacting inwardly extending flanges upon the side walls of the opening adapted for interlocking engagement to effect a sealing connection when the spout is thrown open, the said flanges upon the side walls of the openings also serving as wipers having free edges arranged to scrape the surfaces of the side walls of the spout.

7. As a new article of manufacture, a spout for containers comprising a sector-shaped body, said body consisting of a bottom plate, side walls rigid with the bottom plate and having longitudinally-curved free edges, said walls having their inner ends projecting beyond the inner end of the bottom plate, a knuckle at the inner end of the bottom plate, a finger tab at the outer end thereof, and portions bent backwardly from the inner ends of the side walls to form stop flanges.

In testimony whereof I affix my signature in presence of two witnesses.

HARRY S. BRETTON.

Witnesses:
CHAS. HENDERSON,
STEPHEN J. GUNN.