The Commissioner of Patents
PO Box 200
WODEN ACT 2606

F B RICE & CO
SYDNEY NSW
Speed Dial 511

AUSTRALIA
Patents Act 1990

663620

PATENT REQUEST: STANDARD PATENT

We, CARL-ZEISS-STIFTUNG TRADING AS SCHOTT GLASWERKE, being the person(s) identified below as the Applicant, request the grant of a standard patent to the person identified below as the Nominated Person, for an invention described in the accompanying complete specification.

Full application details follow.

Applicant:	CARL-ZEISS-STIFTUNG TRADING AS SCHOTT GLASWERKE
Address:	Hattenbergstr. 10 D-55122 Mainz Federal Republic of Germany
Nominated Person:	CARL-ZEISS-STIFTUNG TRADING AS SCHOTT GLASWERKE
Address:	Hattenbergstr. 10 D-55122 Mainz Federal Republic of Germany
Invention Title:	"Cooking range"

Name(s) of Actual Inventor(s): Harwig Scheidler; Martin Taplan

Address for service is: F.B. RICE & CO.,
28A Montague St,
Balmain N.S.W. 2041

Attorney Code: RI

BASIC CONVENTION APPLICATION(S) DETAILS

Application No	Country	Country Code	Date of Application
P4235263.0	Federal Republic of Germany	DE	20 October 1992

APPLICANT

We are not an eligible person described in Section 33 - 36 of the Act.

Drawing number recommended to accompany the abstract Fig 1

Dated this 29 day of September 1993

CARL-ZEISS-STIFTUNG TRADING AS
SCHOTT GLASWERKE

S 040785 270993

By: _____
Registered Patent Attorney

PW/JT5/61543

Australia Patents Act 1990

Notice of Entitlement

(to be filed before acceptance)

~~I/We~~ Dr. Amrhein and Mrs. Sommerkorn
being authorised by CARL-ZEISS-STIFTUNG trading as Schott Glaswerke
of Hattenbergstr. 10, D-55122 Mainz

the applicant in respect of an application for a patent for an invention entitled Cooking range

filed under Australian Application No. 48655/98, state the following:-

Part 1 - *Must be completed for all applications.*

The person(~~s~~) nominated for the grant of the patent:

☐ ~~is/are the actual inventor(s)~~

~~or~~

☒ has, for the following reasons, gained entitlement from the actual inventor(s):

The nominated person is a person who would if a patent were granted upon an application made by the actual inventor(s) be entitled to have the patent assigned to it

H. Scheidler, Zeisigweg 5, D-55126 Mainz and
M. Taplan, Rheinstr. 166, D-55218 Ingelheim

Part 2 - *Must be completed if the application is a Convention application.*

The person(~~s~~) nominated for the grant of the patent is/~~are~~:

☒ the applicant(~~s~~) of the basic application(~~s~~) listed on the patent request form

~~or~~

☐ ~~entitled to rely on the basic application(s) listed on the patent request form by reason of the following:-~~

The basic application(~~s~~) listed on the request form is/~~are~~ the first application(~~s~~) made in a Convention country in respect of the invention.

~~**Part 3** - *must be completed if the application was made under the PCT and claims priority.*~~

The person(s) nominated for the grant of the patent is/are:

☐ the applicant(~~s~~) of the application(s) listed in the declaration under Article 8 of the PCT

or

☐ entitled to rely on the application(s) listed in the declaration under Article 8 of the PCT by reason of the following:-

The basic application(s) listed in the declaration made under Article 8 of the PCT is/are the first application(s) made in a ~~Convention country in respect of the invention.~~

CARL-ZEISS-STIFTUNG trading as
SCHOTT GLASWERKE
ppa. i. V.

Signed: _____ **Date:** Mainz, October 8, 1993
(Dr. Amrhein) (Sommerkorn)

Status: Head of Patent Department Handlungsbevollmächtigte

F.B. RICE & CO. PATENT ATTORNEYS

AU9348655

(12) PATENT ABRIDGMENT (11) Document No. AU-B-48655/93
(19) AUSTRALIAN PATENT OFFICE (10) Acceptance No. 663620

(54) Title
COOKING RANGE

International Patent Classification(s)
(51)[5] **F24C 007/08**

(21) Application No. : **48655/93** (22) Application Date : **27.09.93**

(30) Priority Data

(31) Number	(32) Date	(33) Country
4235263	**20.10.92**	**DE GERMANY**

(43) Publication Date : **05.05.94**

(44) Publication Date of Accepted Application : **12.10.95**

(71) Applicant(s)
CARL-ZEISS-STIFTUNG TRADING AS SCHOTT GLASWERKE

(72) Inventor(s)
HARWIG SCHEIDLER; MARTIN TAPLAN

(74) Attorney or Agent
F B RICE & CO , 28A Montague Street, BALMAIN NSW 2041

(56) Prior Art Documents
US 4511781
GB 2041673

(57) Claim

1. A cooking range with a cooking surface in form of a glass/glass ceramic cover with at least one cooking zone and at least one functional area having functional elements adapted to control operation of each cooking zone, said functional area being separated spatially and physically from the cooking zones, characterised in that the functional area is provided as a complete modular unit with nondestructively detachable fastening means adapted to allow independent replacement of each functional area on the cooking range.

15. The cooking range having a first glass/glass ceramic panel including at least one cooking zone, at least one second glass/glass ceramic panel with openings therethrough for receiving and retaining therein control switches and a means for mounting the second panel in the cooking range independently of and proximate to the first panel whereby the second panel provides a replaceable module, which is replaceable without substantially disturbing the first panel.

24. A cooking range of modular construction comprising at least one cooking surface in the form of a glass/glass

.../2

ceramic cover with cooking zones wherein control/signal elements combined in at least one polygonal or semicircular functional area along a side of the cooking range are integrated, wherein the functional area is made of a glass/glass ceramic and arranged as a unit spatially separated from the cooking surface and independently replaceable; the functional area including openings for receiving switches and signal lamps, the openings being flush-sealed to the surface of the functional area interfaced with the cooling surface by a permanently elastic silicon adhesive configured as a membrane, a short-stroke switch being arranged as a functional element underneath the silicon adhesive membrane, the cooking range further including a frame enclosing the cooking range without the functional areas with corresponding frame parts being fixed to the functional area, the functional area being attachable to the cooking range as a complete extension module.

663620

AUSTRALIA

Patents Act 1990

CARL-ZEISS-STIFTUNG TRADING AS SCHOTT GLASWERKE

ORIGINAL
COMPLETE SPECIFICATION
STANDARD PATENT

Invention Title:

"Cooking range"

The following statement is a full description of this invention including the best method of performing it known to us:-

The invention concerns a cooking range comprising at least one cooking surface in the form of a glass/glass ceramic cover or the like with cooking zones, wherein functional elements such as control and display elements combined in at least one functional area are integrated.

Such a cooking range, wherein the switches, signaling lamps, electronic or electromechanical components are arranged in the operating area of the cooking surface and which comprise a so-called "touch-control switch" as a functional element, is commercially available and known from the FR 2 658 591 A1.

It has been found that these touch-control switches do not always operate without failure. The touch-control switches respond to the capacitive change occurring when a finger touches the glass ceramic upper surface. However, the sensor reacts more or less quickly, depending on the humidity of the finger resp. the humidity of the glass ceramic upper surface. This unreliable response behaviour ultimately results in customer dissatisfaction.

It could thus be considered to solve the problem by introducing borehole openings in the cooking surface and inserting resp. passing respective switches or signaling lamps through said openings. In this case, however, the problem is that the sturdiness of the cooking surface is impaired and that, if damaged, the entire cooking surface

becomes unusable. If these functional elements are to be additionally mounted damp-proof, it is necessary to glue them. However, if the functional element then breaks down, it can only be disengaged from the cooking surface with difficulty or not at all.

SUMMARY OF THE INVENTION

Starting from the cooking range described above, the problem of the invention is to accomodate functional elements in the working area of the cooking surface which display reliable response behaviour and, in case of damage, facilitate simple and inexpensive replacement, whilst the evenness of the cooking surface is retained and the optical appearance of the entire cooking range may, if desired, be improved.

This problem is solved according to the invention in that the functional area is arranged as a unit which is spatially separated from the cooking surface and can be separately replaced.

The invention provides a solution to the problem by the simple method of physical separation of the cooking surface area from the functional area. Due to recesses required in the functional area, the functional area remains subject to threat of breakage, but these functional areas are easily replaceable. In case of damage there is no need to replace the entire cooking surface, but only the damaged unit, i.e. the functional part. It is a further advantage of the cooking range according to the invention that the even flatness of the entire

AUSTRALIAN PATENT OFFICE 30

In a first aspect, the present invention provides a cooking range with a cooking surface in form of a glass/glass ceramic cover with at least one cooking zone and at least one functional area having functional elements adapted to control operation of each cooking zone, said functional area being separated spatially and physically from the cooking zones, characterised in that the functional area is provided as a complete modular unit with nondestructively detachable fastening means adapted to allow independent replacement of each functional area on the cooking range.

In a second aspect, the present invention provides the cooking range having a first glass/glass ceramic panel including at least one cooking zone, at least one second glass/glass ceramic panel with openings therethrough for receiving and retaining therein control switches and a means for mounting the second panel in the cooking range independently of and proximate to the first panel whereby the second panel provides a replaceable module, which is replaceable without substantially disturbing the first panel.

In a third aspect, the present invention provides a cooking range of modular construction comprising at least one cooking surface in the form of a glass/glass ceramic cover with cooking zones wherein control/signal elements combined in at least one polygonal or semicircular functional area along a side of the cooking range are integrated, wherein the functional area is made of a glass/glass ceramic and arranged as a unit spatially separated from the cooking surface and independently replaceable; the functional area including openings for receiving switches and signal lamps, the openings being flush-sealed to the surface of the functional area interfaced with the cooling surface by a permanently elastic silicon adhesive configured as a membrane, a short-stroke switch being arranged as a functional element

AUSTRALIAN PATENT OFFICE

underneath the silicon adhesive membrane, the cooking range further including a frame enclosing the cooking range without the functional areas with corresponding frame parts being fixed to the functional area, the functional area being attachable to the cooking range as a complete extension module.

Due to recesses required in the functional area, the functional area remains subject to threat of breakage, but these functional areas are easily replaceable. In case of damage there is no need to replace the entire cooking surface, but only the damaged unit, i.e. the functional part. It is a further advantage of the cooking range according to the invention that the even flatness of the entire

AUSTRALIAN PATENT OFFICE BR

cooking range is retained and that the functional area may be provided in diverse designs and may therefore be used, on the basis of otherwise like cooking range design, to create the most varied models.

In addition to the functional area, preferably made of the same material as the cooking surface, it is also possible, in a further embodiment of the invention, to manufacture the functional area using a different material (e.g. enamel or steel plate). The scope for constructional and design variety is thereby increased considerably.

A number of options are available to the person skilled in the art for arranging the functional areas in the cooking range. To facilitate decentralised operation of the functional elements of the individual cooking ~~surfaces~~ zones, the functional areas are advantageously accommodated in the corner areas of the cooking range. It is also conceivable to provide an integrated section of the cooking range as the functional area. In this way, a central control area is obtained.

It is principally also possible to arrange the functional area as a component of polygonal sections resp. sections of oval cooking ranges. The cooking range could be constructed in segments and the replaceable functional unit could therefore also be used as a special design feature.

The term "segmented construction" (modular construction) refers to the possibility of combining cooking ~~surfaces~~ ranges (different colours, patterns, heating element types) and functional

elements of differential design in one product family. This provides the designer with a range of options for designing the entire cooking range, but at low manufacturing cost, since only a small number of different basic elements need to be manufactured.

In a further advantageous and practical embodiment of the invention the borehole opening is flush-sealed to the surface of the functional element with a permanently elastic silicon adhesive acting like a membrane, so that the upper surface of the functional area retains its even flatness and this portion filled with silicon additionally provides flexibility for actuation of a short-stroke switch arranged underneath the same. In this case the opening filled with silicon adhesive in the cooking surface acts like a membrane. Short path changes effected by finger impression are transmitted to the short-stroke switch below.

BRIEF DESCRIPTION OF THE DRAWINGS

Further details and embodiments of the invention are described by means of the examples with reference to the drawings.

The Figures show:

Fig. 1-5 five different possibilities for integrating the functional areas in the cooking range,

Fig. 6-8 different options for arranging openings in the functional area covers,

Fig. 9-10 two possibilities for accommodating switches in the openings of the functional elements,

Fig. 11 an exploded view of the arrangement of the functional element in the cooking range as an insert module,

Fig. 12 the arrangement of the functional element as a complete extension module of a cooking range in exploded view, and

Figs. 13-15 two options for mounting the replaceable insert module according to Fig. 11.

Fig. 1 is a schematic plan view presentation of a cooking range 1 with a cooking surface in the form of a glass ceramic covering comprising four cooking zones 2, 3, 4 and 5. The number of cooking zones is merely exemplary; the cooking range may comprise any number of cooking zones. The material specified is also a preferred embodiment. Other materials suitable for forming into cooking surfaces may also be used, in particular materials consisting of brittle fracturing substances. The functional elements (not shown) such as switches, signal lamps etc. are combined in function areas 6, 7, 8 and 9 constructed as functional parts (units), spatially separated from the cooking surface and arranged so as to be separately replaceable, as explained in detail in subsequent Figures.

In the embodiment according to Fig. 1 the functional areas 6-9 are arranged in the corner

area of cooking range 1. The functional area can thereby be confined to one corner or may occupy several corners, up to four corners, as shown, depending on the number of cooking zones to be integrated operationally.

The cooking range according to Fig. 2 differs from that in Fig. 1 in that, in place of the corner arrangement, a complete section 10 of the cooking range is formed as the functional area. Such an arrangement permits the provision of functional area 10 as a centralised operating panel for the entire cooking range.

Figures 3-5 show cooking ranges, wherein the functional areas are respectively arranged on two sides of the cooking range in symmetrical alignment. In Figs. 3 and 4 the functional areas are arranged to form part of respective polygons. In Fig. 3 the functional area is respectively of trapezoidal diameter, and in Fig. 4 of centrosymmetrical triangular diameter. Fig. 5 shows an embodiment wherein the functional area is arranged in the form of sections 13a and 13b of oval ccoking ranges. In these embodiments according to Figs. 3-5 it is conceivable to construct the cooking range in segments and to thus incorporate the replaceable functional unit as a special design element.

The concept "segmented construction" (modular construction) refers to the possibility of freely combining cooking ~~surfaces~~ ranges (different colours, patterns and heating elements) and functional elements of diverse design in a single product family. This provides the designer with a wide

range of design options for the entire cooking range, but at low manufacturing cost, since only a small number of different basic elements need to be produced.

In addition to the arrangements of the functional areas according to Figs. 1-5, a variety of other options are available to the person skilled in the art, which will be selected on the basis of considerations of utility, style etc.

Figs. 6-8 show different possibilities for arranging openings in the functional area covers to receive the functional elements, such as switches, signal lamps resp. electronic or electro-mechanical parts. Fig. 6 thus shows as an exemplary embodiment the functional corner area 6 according to Fig. 1 with a round opening 14, whereas Fig. 7 shows the same corner area 6 with a square opening 15. Fig. 8 shows the functional area 10 according to Fig. 2 with two round openings 16, 17, an oval opening 18 and a rhombic opening 19.

Rectangular openings or openings with other diameters are also possible, which the person skilled in the art will select with reference to utility criteria.

In the functional areas 11, 12 and 13 of Figs. 3-5 openings corresponding to those in Figs. 6-8 are of course also provided. They are not shown to keep the drawings simple.

Figs. 9 and 10 show two typical examples of the arrangement of a functional element in the form of a switch in the openings.

Fig. 9 shows in the functional area resp. the opening 14 therein (corresponding to the presentation in Fig. 6) a switch 20 actuatable by hand which does not flush-close with the surface of the functional area.

As shown in Fig. 10, the opening 14 is, however, advantageously flush-sealed with the surface of the functional area 6 by means of silicon adhesive 22. This arrangement has the advantage that the upper surface is kept evenly flat and that the area filled with silicon is flexible so as to actuate a short-stroke switch arranged thereunder. In this case the opening 14 filled with silicon adhesive 22 in functional area 6 acts like a membrane. Short path changes effected by finger impression can be transmitted to the short-stroke switch 21 below. A function of the cooking surface can thus be safely and reliably switched on or off, whilst the surface is tightly sealed and hygienic. The disadvantages of the capacitive touch-control switch are eliminated in this embodiment.

The arrangements according to Figs. 9 and 10, of course, only represent selected examples. Other functional elements are appropriately mounted in functional areas of different design (e.g. those according to Figs. 2-5) in the corresponding openings.

By reference to Figs. 11-15 the possibilities for constructional arrangement of the functional areas in the cooking range are now described as follows.

Fig. 11 shows an embodiment on the basis of Figs. 1 and 6 in exploded view. The cooking range 1 is

completely enclosed by a frame 24, whereby at least one corner is recessed to receive the functional area 6 in the form of a replaceable insert module comprising opening 14 resp. insert frame 23.

In a development of the arrangement according to Fig. 11 the frame 24 is removed in the corner areas of the cooking range according to Fig. 12 (exploded view) and integrated with the functional area 6 as position 24a, so that functional area 6 may form a complete extension module attached to a cooking range.

The same applies to the functional areas according to Figs. 2-5.

The functional areas 6-9, 10, 11, 12 and 13 may therefore either be inserted in a frame enclosing the entire cooking range (Fig. 11) or they may be attached to a cooking range as a complete extension module (Fig. 12), whereby in both cases the switch member (not shown) may already be integrated in the opening 14 and connected to the cooking ~~surface~~ range during installation by means of corresponding plug connections.

Figs. 13 and 14 show in section an example of a constructional arrangement of an insert module according to Fig. 11, whereby Fig. 13 shows the condition before installation in exploded view and Fig. 14 shows the installed state. The section extends along the central perpendicular line into the cooking range corner (left edge in the Figures).

A small frame 23 (Fig. 11) is glued to the triangular functional unit 6 comprising opening 14. The small frame comprises bending flaps 23a arranged along the short sides of the triangle and a clamping ring 23b along its hypothenuse side. The cooking range 1 comprises an L-shaped locking bar 26 glued thereto with a suitable adhesive, which extends into the free cooking range corner (viz. Fig. 11) along the enclosing frame 24 and is fixed thereto. The functional area or "functional corner" may be clamped into the L-shaped holding bar 26 of the cooking range by its clamping ring 23b and then be fully inserted in the frame 24. The bending rings 23a on the short sides of the triangle can then be bent around and thus provide sufficient mechanical support to the functional corner. This assembled state is shown in Fig. 14.

In a final step the air gap "x" between cooking range 1 and enclosing frame 24 may be filled with silicon 27. The adhesion surfaces of the frame and, if necessary, of the front end of the cooking surface are first treated with a suitable separating agent (e.g. Molikote) to ensure that subsequent replacement (in case of damage) is easily possible. It is, however, also possible to insert a suitable gasket cord or an appropriately formed elastic profile ring.

If predetermined tolerances are observed, it is possible in a preferred embodiment to provide the functional corner with a prevulcanized adhesive edge, in particular a tip-stretched silicon rubber edge, before installation and to press the functional corner tightly into the cooking range corner. In this case only the bending rings must be

bent over after the functional corner is pressed in. This embodiment has the advantage that there is no need for subsequent filling of the air gap with a silicon adhesive and that extremely simple replacement is facilitated.

This constructional principle is, of course, not restricted to the triangular functional areas shown in the Figure, but applies equally to other, e.g. square, rectangular or semicircular functional areas.

In the patent publication DE 31 04 114 C2 a glass ceramic cooking surface with a prevulcanized silicon rubber edge is described which is replaceably inserted in a sealing frame. In the case of damage, however, the entire expensive cooking surface must be replaced. In the present invention the functional area subject to breakage risk can be replaced independently of the cooking surface.

Instead of mounting the "functional corner" 6 by means of clamping ring 23b and bending ring 23a, as shown in Fig. 14, the functional corner may also be fastened to the cooking range frame by means of screw elements.

Fig. 15 shows such a construction in assembled state. Screw bolts 28 are glued along their length to functional area 6, whereby the L-shaped holding bar 26 comprises bore holes for receiving the bolts which are screwable to the holding bar by means of nuts 29. The air gap between the cooking range and the enclosing frame is also sealed in this embodiment, e.g. with a silicon adhesive 27.

The mounting methods shown in Figs. 13-15 are only examples for a whole range of mounting methods, which can principally be effected by means of bending rings, screwing, clips or clamping devices.

THE CLAIMS DEFINING THE INVENTION ARE AS FOLLOWS:-

1. A cooking range with a cooking surface in form of a glass/glass ceramic cover with at least one cooking zone and at least one functional area having functional elements adapted to control operation of each cooking zone, said functional area being separated spatially and physically from the cooking zones, characterised in that the functional area is provided as a complete modular unit with nondestructively detachable fastening means adapted to allow independent replacement of each functional area on the cooking range.

2. The cooking range according to claim 1, wherein the functional area has a glass/glass ceramic cover made of the same material as the cooking surface.

3. The cooking range according to claim 1 or 2, wherein the functional area is arranged in a corner area of the cooking range.

4. The cooking range according to claim 1 or 2, wherein the functional area is arranged as a polygon or as a semicircle along at least one side of the cooking range.

5. The cooking range according to any one of claims 2-4, wherein the cover of the functional area comprises openings for receiving functional elements such as switches, signal lamps or other electronical or electromechanical parts.

6. The cooking range according to claim 5, wherein round, oval, square or rectangular openings are provided.

7. The cooking range according to claim 5 or 6, wherein the opening is flush-sealed to the surface of the functional area by means of a permanently elastic silicon adhesive in the manner of a membrane and wherein a short-stroke switch is arranged as a functional element underneath the silicon adhesive membrane.

8. The cooking range according to any one of claims 1-7, further comprising a frame surrounding the entire cooking range including the functional areas, each

AUSTRALIAN PATENT OFFICE

functional element being insertable in recesses provided in said frame.

9. The cooking range according to any one of claims 1-7, further comprising a frame surrounding the cooking range apart from the functional areas, with separate frame parts being fixed to each functional area, the functional area being attachable to the cooking range as a complete extension module.

10. The cooking range according to claim 8 or 9, wherein the respective functional elements are integrated in the functional area before installation of said functional area in the cooking range and wherein the functional area, as well as the cooking range, comprise plug connections.

11. The cooking range according to any one of claims 8-10, wherein mechanical fastening means such as small frames, holding bars, clamping and bending rings, clips, screw connections are provided on the bottom side of the cover of the functional area and on the cooking range as well as the frame.

12. The cooking range according to any one of claims 8-11, wherein gaps between a respective functional area and the cooking range and/or frame are filled with a silicon adhesive.

13. The cooking range according to any one of claims 8-11 wherein gaps between a respective functional area and the cooking range and/or frame are sealed by an elastic gasket cord or an appropriately formed elastic profile ring.

14. The cooking range according to any one of claims 8-11, wherein the edge of the cover of the functional area is provided with silicon sealing-rim.

15. The cooking range having a first glass/glass ceramic panel including at least one cooking zone, at least one second glass/glass ceramic panel with openings therethrough for receiving and retaining therein control switches and a means for mounting the second panel in the

AUSTRALIAN PATENT OFFICE

cooking range independently of and proximate to the first panel whereby the second panel provides a replaceable module, which is replaceable without substantially disturbing the first panel.

16. The cooking range of claim 15, wherein the first and second panels are coplanar.

17. The cooking range of claim 15 or 16, wherein the first and second panels have edges which face one another in spaced relation with respect to one another and wherein an adhesive material is disposed between the edges of the first and second panels.

18. The cooking range according to any one of claims 15-17, wherein the first and second panels combine to define a rectangular area and wherein the second panel is triangular.

19. The cooking range according to any one of claims 15-18, wherein the first and second panels are each mounted within peripheral flanges which are inverted L-shaped in cross-section and rest on inverted L-shaped brackets fixed to a vertical leg of the inverted L-shaped flange members.

20. The cooking range of claim 19, further including at least one bendable tab fixed to the bottom of the second panel for fitting under a horizontal leg of the inverted L-shaped bracket.

21. The cooking range according to any one of claims 15-20, wherein a flange is adhered to the bottom of the first panel and extends horizontally with respect thereto across the gap between the panels and wherein the second panel includes a horizontally extending tab adhered to the bottom thereof which fits beneath the flange to retain the second panel in juxtaposition with the first panel.

22. The cooking range according to any one of claims 15-19, wherein the second panel includes threaded studs projecting from the bottom thereof which are received through the peripheral flanges and secured to the peripheral flanges with threaded fasteners.

AUSTRALIAN PATENT OFFICE

23. The cooking range according to any one of claims 15-22, further including visual indicator means positioned in at least one of the openings bored through the second panel.

24. A cooking range of modular construction comprising at least one cooking surface in the form of a glass/glass ceramic cover with cooking zones wherein control/signal elements combined in at least one polygonal or semicircular functional area along a side of the cooking range are integrated, wherein the functional area is made of a glass/glass ceramic and arranged as a unit spatially separated from the cooking surface and independently replaceable; the functional area including openings for receiving switches and signal lamps, the openings being flush-sealed to the surface of the functional area interfaced with the cooling surface by a permanently elastic silicon adhesive configured as a membrane, a short-stroke switch being arranged as a functional element underneath the silicon adhesive membrane, the cooking range further including a frame enclosing the cooking range without the functional areas with corresponding frame parts being fixed to the functional area, the functional area being attachable to the cooking range as a complete extension module.

25. The cooking range according to claim 24, wherein the respective functional elements are integrated in the functional area before installation of said functional area in the cooking range and wherein the functional area, as well as the cooking range, comprise plug connections.

26. The cooking range according to claim 24 or 25, wherein mechanical fastening means are provided on the bottom side of the cover of the functional area and on the cooking range as well as the frame.

27. The cooking range according to any one of claims 24-26 wherein gaps between the functional area and the

AUSTRALIAN PATENT OFFICE

cooking range and/or frame are filled with a silicon adhesive.

28. The cooking range according to any one of claims 24-26, wherein gaps between the functional area and the cooking range and/or frame are sealed by an elastic gasket cord or elastic profile ring.

29. The cooking range according to any one of claims 24-26, wherein the edge of the cover of the functional area has a silicon sealing rim.

30. A cooking range substantially as hereinbefore described with reference to the accompanying drawings.

DATED this 26th day of April 1995

CARL-ZEISS STIFTUNG
trading as SCHOTT
GLASWERKE
Patent Attorneys for the
Applicant:

F.B. RICE & CO.

AUSTRALIAN PATENT OFFICE SA

ABSTRACT

Cooking ranges with cooking surfaces in the form of a glass ceramic cover comprise functional elements such as operation and signal elements integrated into the cooking range. For improved utility and maintenance these functional elements are combined in at least one functional area forming a functional part (unit) arranged to be spatially separate from the cooking surface and independently replaceable.

48655/93

FIG. 1

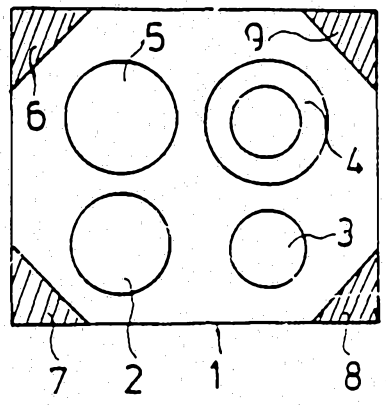

FIG. 2

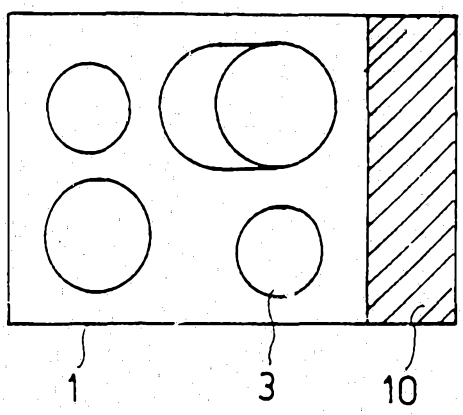

FIG. 3

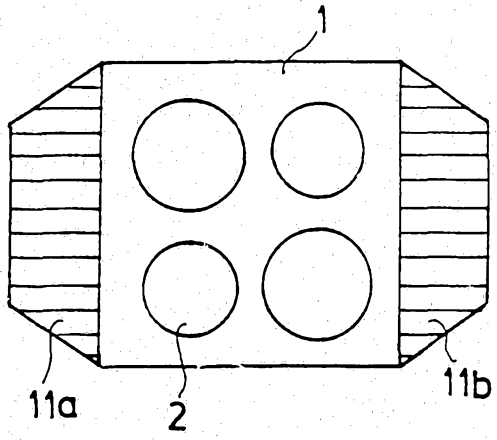

FIG. 4

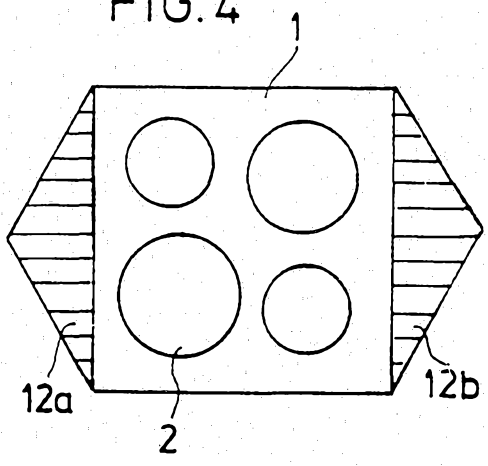

FIG. 5

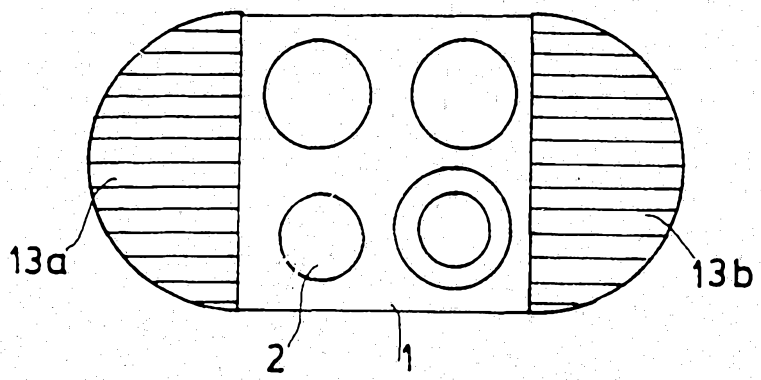

FIG.6

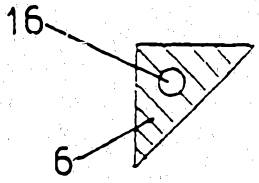

FIG.7

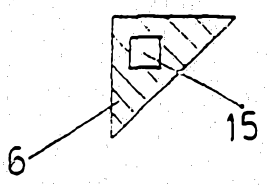

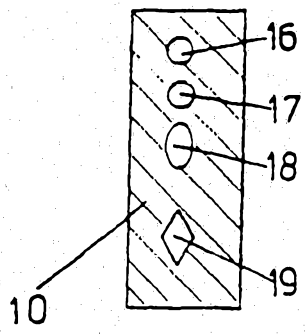

FIG.8

FIG.9

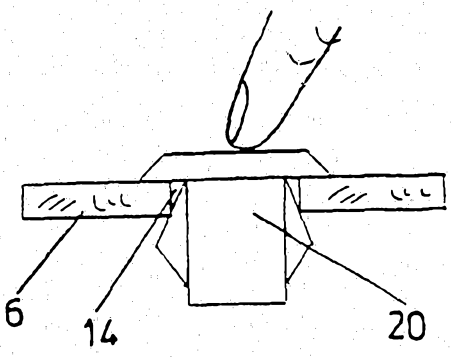

FIG.10

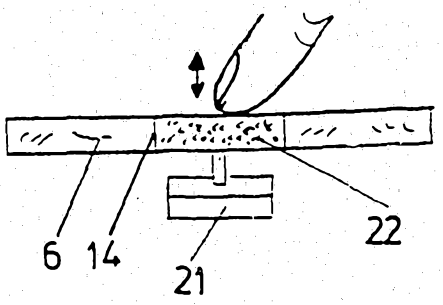

FIG.11

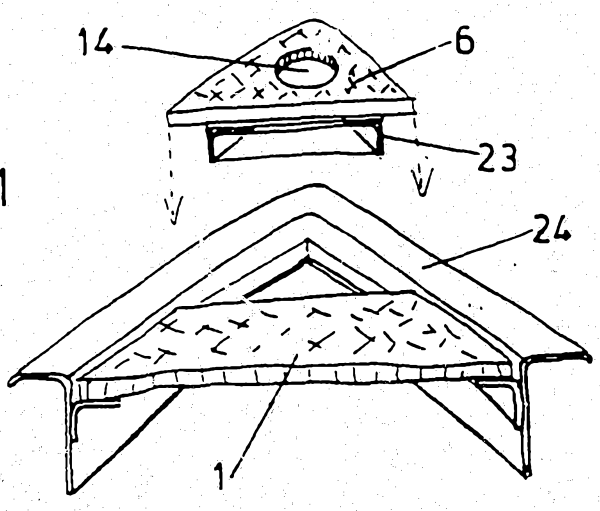

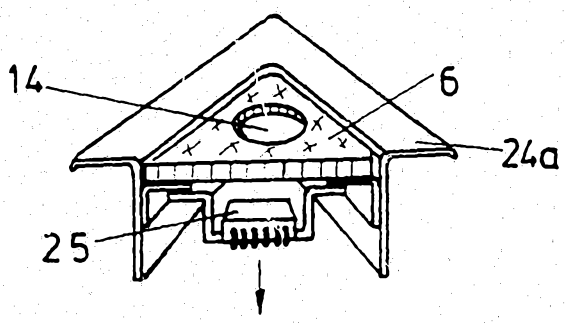

FIG.12

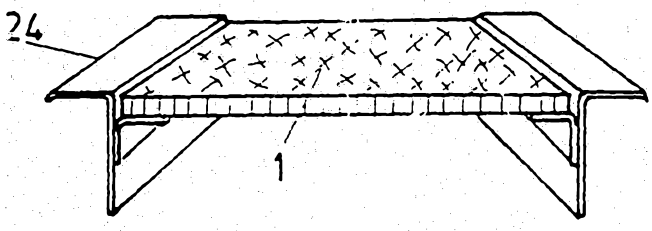

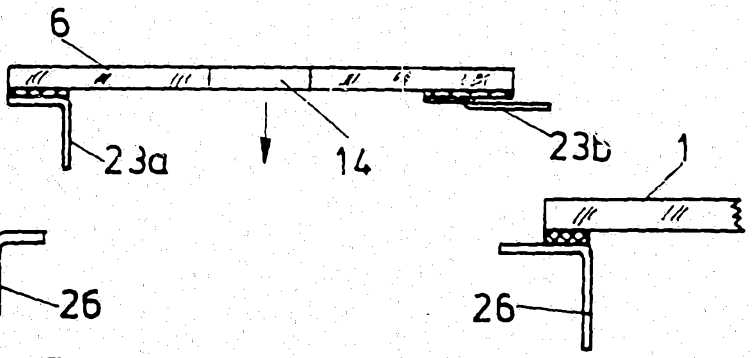

FIG.13

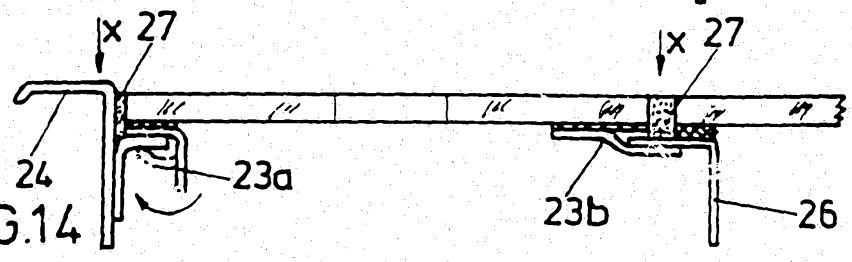

FIG.14

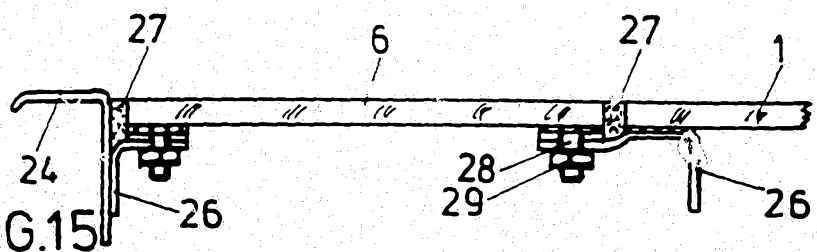

FIG.15