(12) INTERNATIONAL APPLICATION PUBLISHED UNDER THE PATENT COOPERATION TREATY (PCT)

(19) World Intellectual Property Organization
International Bureau

(43) International Publication Date
20 August 2009 (20.08.2009)

PCT

(10) International Publication Number
WO 2009/102546 A1

(51) International Patent Classification:
F01D 17/16 (2006.01)

(21) International Application Number:
PCT/US2009/031940

(22) International Filing Date:
26 January 2009 (26.01.2009)

(25) Filing Language: English

(26) Publication Language: English

(30) Priority Data:
61/027,935 12 February 2008 (12.02.2008) US

(71) Applicant *(for all designated States except US)*: **HONEYWELL INTERNATIONAL INC.** [US/US]; Columbia Road and Park Avenue, Morris Township, NJ 07962 (US).

(72) Inventors; and

(75) Inventors/Applicants *(for US only)*: **VALIN, Charles, Philippe** [FR/FR]; 11 Square Tabouillot, F-57000 Metz (FR). **ABEL, Francis** [FR/FR]; Z.I. Inova 3000, Thaon-Les-Vosges (FR). **SAUSSE, Lorrain** [FR/FR]; 4 Rue Du 8 Mai 1945, F-88130 Charmes (FR).

(74) Agents: **JAMES, John, C.** et al.; Honeywell Turbo Technologies, 3201 West Lomita Boulevard, Torrance, CA 90505 (US).

(81) Designated States *(unless otherwise indicated, for every kind of national protection available)*: AE, AG, AL, AM, AO, AT, AU, AZ, BA, BB, BG, BH, BR, BW, BY, BZ, CA, CH, CN, CO, CR, CU, CZ, DE, DK, DM, DO, DZ, EC, EE, EG, ES, FI, GB, GD, GE, GH, GM, GT, HN, HR, HU, ID, IL, IN, IS, JP, KE, KG, KM, KN, KP, KR, KZ, LA, LC, LK, LR, LS, LT, LU, LY, MA, MD, ME, MG, MK, MN, MW, MX, MY, MZ, NA, NG, NI, NO, NZ, OM, PG, PH, PL, PT, RO, RS, RU, SC, SD, SE, SG, SK, SL, SM, ST, SV, SY, TJ, TM, TN, TR, TT, TZ, UA, UG, US, UZ, VC, VN, ZA, ZM, ZW.

(84) Designated States *(unless otherwise indicated, for every kind of regional protection available)*: ARIPO (BW, GH, GM, KE, LS, MW, MZ, NA, SD, SL, SZ, TZ, UG, ZM, ZW), Eurasian (AM, AZ, BY, KG, KZ, MD, RU, TJ, TM), European (AT, BE, BG, CH, CY, CZ, DE, DK, EE, ES, FI, FR, GB, GR, HR, HU, IE, IS, IT, LT, LU, LV, MC, MK, MT, NL, NO, PL, PT, RO, SE, SI, SK, TR), OAPI (BF, BJ, CF, CG, CI, CM, GA, GN, GQ, GW, ML, MR, NE, SN, TD, TG).

Published:

— *with international search report (Art. 21(3))*

(54) **Title**: PROCESS FOR CALIBRATING A VARIABLE-NOZZLE ASSEMBLY OF A TURBOCHANGER AND A VARIABLE-NOZZLE ASSEMBLY FACILITATING SUCH PROCESS

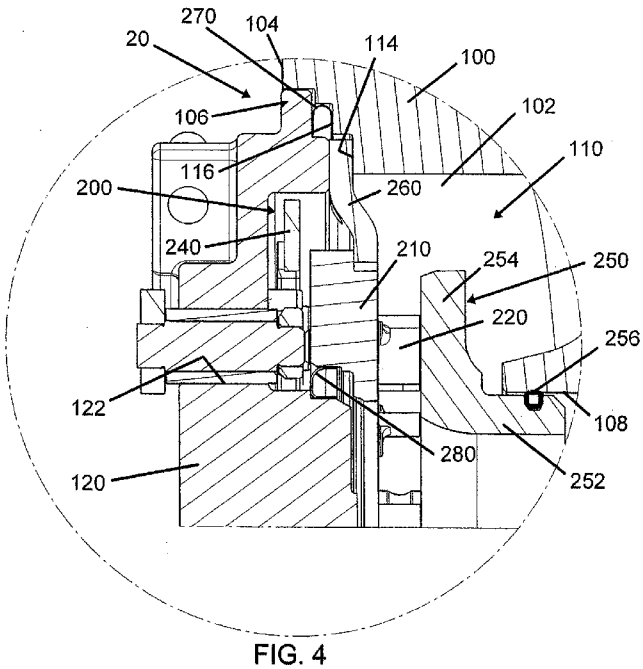

FIG. 4

(57) **Abstract**: A process for calibrating a variable-nozzle assembly (200) prior to its installation in a turbocharger. The variable-nozzle assembly facilitating such process is installed in a calibration fixture (20) having internal flow-path contours configured to replicate corresponding internal flowpath contours of a turbocharger into which the variable-nozzle assembly (200) is to be installed. The calibration fixture (20) defines a generally annular chamber (110) in fluid communication with a flow path defined in the variable-nozzle assembly (200), and a fluid supply passage (112) extending into the annular chamber. A fluid is supplied through the fluid supply passage (112), and the fluid then flows through the flow path of the variable-nozzle assembly (200). While the fluid is flowing through the variable-nozzle assembly (200), the vanes (220) are pivoted to set a predetermined flow rate. A stop member (290) is then fixed to the variable-nozzle assembly (200) so that the vanes (220) cannot be pivoted past the position corresponding to the predetermined flow rate.

WO 2009/102546 A1

PROCESS FOR CALIBRATING A VARIABLE-NOZZLE OF A TURBOCHARGER, AND A VARIABLE-NOZZLE FACILITATING SUCH PROCESS

BACKGROUND OF THE INVENTION

The present disclosure relates generally to turbochargers having a variable-nozzle assembly made up of an array of circumferentially spaced vanes supported by a nozzle ring and rotatable about respective axes defined by vane shafts that extend through bearing apertures in the nozzle ring, wherein a unison ring engages vane arms that in turn are affixed to the vane shafts such that rotation of the unison ring in one direction or the other causes the vanes to be pivoted to vary their setting angles, whereby the effective flow area through the nozzle is varied.

Such a variable-nozzle assembly typically is actuated by an actuator (e.g., a diaphragm actuator) connected via a mechanical linkage to the unison ring. The variable-nozzle assembly must be calibrated to ensure that a given position of the mechanical linkage corresponds to the desired positions of the vanes, so that for example when the mechanical linkage is placed in a position that is supposed to produce a minimum flow rate through the nozzle, the vanes will truly be in the proper positions to provide a minimum effective flow area through the nozzle.

This calibration process typically is performed during the assembly of the turbocharger, by installing the variable-nozzle assembly in the turbocharger and then supplying air into the turbine housing so it flows through the variable-nozzle assembly. A pertinent parameter (e.g., turbocharger rotational speed) is monitored while the variable-nozzle assembly is actuated to vary the vane setting angles until the monitored parameter reaches a predetermined level (e.g., until the turbocharger speed reaches a minimum value such that rotating the vanes in either direction from the minimum-speed position causes the speed to increase). Once the desired vane position is attained, the mechanical linkage

is adjusted if necessary so that a predetermined position of the linkage produces the desired result.

The need for calibration of the variable-nozzle assembly during the assembly of the turbocharger substantially complicates and slows down the assembly process.

BRIEF SUMMARY OF THE DISCLOSURE

The present disclosure relates to a process for calibrating a variable-nozzle assembly of a turbocharger prior to its incorporation into the turbocharger. The process allows the manufacturer of the variable-nozzle assembly to calibrate the assembly, if desired, before it is shipped to the turbocharger manufacturer who will incorporate it into the turbocharger. In accordance with one embodiment disclosed herein, a process is described for calibrating a variable-nozzle assembly prior to its installation in a turbocharger. The variable-nozzle assembly is installed in a calibration fixture having internal flowpath contours configured to substantially replicate corresponding internal flowpath contours of a turbocharger into which the variable-nozzle assembly is to be installed. The calibration fixture defines a generally annular chamber in fluid communication with a flow path defined in the variable-nozzle assembly, and a fluid supply passage extending into the annular chamber. A fluid is supplied through the fluid supply passage, and the fluid then flows through the flow path of the variable-nozzle assembly. While the fluid is flowing through the variable-nozzle assembly, the vanes are pivoted to set a predetermined flow rate. A stop member can then be affixed to the variable-nozzle assembly so that the vanes cannot be pivoted past the position corresponding to the predetermined flow rate.

In one embodiment, the calibration fixture includes a housing and a cover. The housing defines a central passage extending from a first end at a first face of the housing through to an opposite second end at a second face of the housing, the central passage having a first portion adjacent the first face that is configured to receive the nozzle ring of the variable-nozzle assembly, a second portion sized to receive a tubular part of an insert of the variable-nozzle assembly in a substantially sealed manner, and a third portion forming the generally annular chamber. The cover is configured to engage the housing proximate the first face thereof to substantially close the first end of the central passage.

The process in one embodiment includes steps of: (1) disposing the variable-nozzle assembly in the housing with the tubular part of the insert substantially sealingly received in the second portion of the central passage; (2) connecting a fluid source to the fluid supply passage of the housing and causing a flow of fluid from the fluid source to the fluid supply passage, the fluid then flowing through the flow path defined by the variable-nozzle assembly; and (3) adjusting the setting angles of the vanes while the fluid is flowing through the variable-nozzle assembly to cause the fluid to have a flow rate equal to a predetermined flow rate. The vane arms of the vanes are in a baseline position when the flow rate equals the predetermined flow rate.

In one embodiment the process further comprises the step of affixing a stop member to the nozzle ring. The stop member is structured and arranged to prevent the vane arms from pivoting in one direction past the baseline position, while allowing the vane arms to pivot in an opposite direction away from the baseline position. In a particular embodiment, the stop member is engaged in a receptacle defined in the opposite face of the nozzle ring from the face adjacent the vanes, such that the stop member is rotatable about an axis thereof. The stop member has an eccentric cam positioned to engage one of the vane arms such that rotation of the stop member about its axis in one direction causes the cam to urge the vane arm to pivot about the respective vane shaft's axis, the vane arm in turn causing the unison ring to rotate and thereby pivot the other vane arms in unison. The step of adjusting the setting angles of the vanes comprises rotating the stop member.

The cover in one embodiment includes an opening therethrough aligned with the stop member, and the step of rotating the stop member comprises passing an end of a tool through the opening in the cover and engaging the tool end with the stop member for rotating the stop member.

The process can further comprise the step, following the adjusting step, of fixing the stop member in a substantially permanent manner in the position of the stop member that causes the flow rate to equal the predetermined flow rate. This can be accomplished, for example, by welding the stop member to the nozzle ring, or press-fitting the stop member into the receptacle in the nozzle ring.

In one embodiment, the providing step comprises providing the housing and cover to have internal surfaces guiding the fluid into the variable-nozzle assembly that are configured to substantially conform to corresponding surfaces of the turbocharger into which the variable-nozzle assembly is to be installed.

The present disclosure also provides a variable-nozzle assembly for a turbocharger. The assembly comprises:

a generally annular nozzle ring defining a plurality of circumferentially spaced bearing apertures therethrough;

a plurality of vanes proximate one face of the nozzle ring and each having a vane shaft extending through a respective one of the bearing apertures such that a distal end of each vane shaft is proximate an opposite face of the nozzle ring;

a plurality of vane arms having first ends respectively affixed to the distal ends of the vane shafts and having opposite second ends engaged by a unison ring that is rotatable relative to the nozzle ring about a central longitudinal axis of the variable-nozzle assembly such that rotation of the unison ring causes the vane arms and the vane shafts to pivot about respective axes thereof so as to rotate the vanes to a different setting angle, the variable-nozzle assembly further comprising an insert spaced from the nozzle ring such that the vanes are disposed between the nozzle ring and a portion of the insert, the insert having a tubular part extending along the longitudinal axis for being received in a turbine housing bore of a turbocharger, the variable-nozzle assembly defining a flow path between the nozzle ring and the portion of the insert and through passages between the vanes such that a fluid can flow generally radially inwardly along the flow path and then through the tubular part; and

a stop member affixed to the nozzle ring, the stop member being structured and arranged to prevent the vane arms from pivoting in one direction past a baseline position of the vane arms, while allowing the vane arms to pivot in an opposite direction away from the baseline position.

The stop member in one embodiment is engaged in a receptacle defined in the opposite face of the nozzle ring such that the stop member is rotatable about an axis thereof, the stop member having an eccentric cam positioned to engage one of the vane arms such that rotation of the stop member about its axis in one direction causes the cam

to urge the vane arm to pivot about the respective vane shaft's axis, the vane arm in turn causing the unison ring to rotate and thereby pivot the other vane arms in unison.

BRIEF DESCRIPTION OF THE SEVERAL VIEWS OF THE DRAWING(S)

Having thus described the disclosure in general terms, reference will now be made to the accompanying drawings, which are not necessarily drawn to scale, and wherein:

FIG. 1 is a perspective view of a housing portion of a calibration fixture in accordance with one embodiment of the present invention;

FIG. 2 is a perspective view toward an inner side of a cover portion of the calibration fixture in accordance with one embodiment of the invention;

FIG. 3 is a perspective view toward an outer side of the cover portion;

FIG. 4 is a fragmentary cross-sectional view showing a variable-nozzle assembly installed in the fixture;

FIG. 5 is a perspective view of a variable-nozzle assembly in accordance with one embodiment of the invention.

DETAILED DESCRIPTION OF THE DRAWINGS

The present invention now will be described more fully hereinafter with reference to the accompanying drawings in which some but not all embodiments of the inventions are shown. Indeed, these inventions may be embodied in many different forms and should not be construed as limited to the embodiments set forth herein; rather, these embodiments are provided so that this disclosure will satisfy applicable legal requirements. Like numbers refer to like elements throughout.

FIG. 1 shows a housing **100** of a calibration fixture **20** useful in a process for calibrating a variable-nozzle assembly in accordance with one embodiment of the invention. FIGS. 2 and 3 show a cover **120** of the fixture. The housing **100** and cover **120** are designed to replicate the internal flowpath contours of the turbocharger into which the variable-nozzle assembly will be installed. In particular, the housing **100** replicates

internal contours of the turbine housing, and the cover **120** replicates internal contours of the center housing of the turbocharger.

The housing **100** defines a central passage **102** extending from one face **104** to an opposite face (not visible in FIG. 1) of the housing. The passage includes a first portion **106** adjacent the face **104**, a second portion **108** adjacent the opposite face, and a third portion **110** disposed generally between the first and second portions. The first portion **106** has a relatively large inside diameter and includes stepped regions for purposes described below. The second portion **108** is relatively small in inside diameter compared to the first portion and is sized to receive a tubular part of the variable-nozzle assembly as further described below. The third portion **110** is configured to replicate the annular or toroidal chamber of the turbine housing into which the variable-nozzle assembly will be installed. The third portion has a relatively large diameter compared to the second portion **108**. The housing **100** also includes a fluid supply passage **112** that extends through an outer peripheral surface of the housing into the third portion or chamber **110** of the housing, so that fluid (e.g., air) can be supplied via the passage **112** into the chamber **110**.

The first portion **106** of the housing passage is configured to receive the variable-nozzle assembly as well as the cover **120**, in such a manner that the cover substantially seals the variable-nozzle assembly inside the housing **100** and prevents air supplied through the passage **112** from escaping except by flowing from the chamber **110** inwardly through the vanes of the variable-nozzle assembly and then out through the second portion **108** of the housing passage.

A variable-nozzle assembly **200** is shown installed in the calibration fixture in FIG. 4, and is shown in isolation in FIG. 5. The variable-nozzle assembly includes a nozzle ring **210** that supports a plurality of vanes **220** each having a vane shaft **222** that extends through a bearing aperture in the nozzle ring, the vanes and bearing apertures being circumferentially spaced about the nozzle ring. An end of each vane shaft **222** projects out from the bearing aperture at the opposite face of the nozzle ring from the vanes. The ends of the vane shafts are rigidly affixed to first ends of respective vane arms **230**. Opposite second ends **232** of the vane arms are engaged by a unison ring **240** adjacent the nozzle ring. More particularly, the unison ring's inner diameter defines recesses **242** that receive the ends **232** of the vane arms **230**. Rotation of the unison ring about a rotation axis substantially coinciding with the central axis of the nozzle ring causes the vane arms **230**

to pivot about pivot axes defined by the bearing apertures in the nozzle ring, thereby rotating the vanes **220** about these axes. This causes the effective flow area through the vanes to be modified.

The variable-nozzle assembly **200** also includes an insert **250** having a tubular part **252** substantially coaxial with the nozzle ring **210** and having a nozzle portion **254** formed as a generally annular flange extending radially outwardly from one end of the tubular part **252**. The nozzle portion **254** is spaced axially from the nozzle ring **210**, and the vanes **220** are disposed therebetween. The nozzle ring and nozzle portion of the insert thus define a nozzle flow path through which fluid flows, passing through the spaces between the vanes. Accordingly, the setting angle of the vanes affects the flow area through the nozzle flow path, and thereby regulates the flow rate.

The variable-nozzle assembly **200** is installed into the housing **100** with the tubular part **252** of the insert sealingly received in the second portion **108** of the housing passage. A sealing ring **256** is retained in a groove in the outer cylindrical surface of the tubular part **252** for sealingly engaging the inner surface of the housing passage. A ring-shaped flange **260** of the variable-nozzle assembly is inserted into the first portion **106** of the housing passage before the rest of the variable-nozzle assembly is inserted. A radially outer portion of the flange **260** engages an axially facing annular surface **114** of the housing, and a radially inner portion of the flange engages an axially facing surface of the nozzle ring **210**. A ring-shaped spring member **270** is inserted into the housing against an axially facing annular surface **116** of larger diameter than the surface **114**. Another ring-shaped spring member **280** is inserted against a radially inwardly facing surface of a radially inner portion of the nozzle ring **210**. The cover **120** of the fixture is then placed atop the spring members **270** and **280**. A radially outer portion of the cover abuts the spring member **270** and compresses it between the cover and the housing surface **116**, and a radially outwardly facing surface of a radially inner portion of the cover, which replicates the nose portion of the turbocharger center housing, engages the inner diameter of the spring member **280**. The cover is secured to the housing such that these two parts of the fixture are substantially sealed together and contain the variable-nozzle assembly therebetween.

The cover **120** includes an aperture **122** therethrough. The variable-nozzle assembly includes a stop member **290** (FIG. 5) that is received in a receptacle defined in

the nozzle ring **210** in such a manner that the stop member is rotatable in the receptacle about its axis. The aperture **122** in the cover is located in alignment with the stop member **290**. The stop member **290** in the illustrated embodiment comprises a pin or the like, having a slotted head for receiving a screwdriver or similar tool. The stop member also includes an eccentric cam **292** extending radially out from the shaft of the stop member. The stop member is positioned such that the cam **292** can contact one of the vane arms **230**, and such that rotation of the stop member in one direction about its axis causes the cam to push the vane arm and cause it to rotate about the pivot axis defined by the bearing aperture in the nozzle ring associated with the vane arm. This rotation of the vane arm causes the unison ring **240** to be rotated, which in turn causes the other vane arms **230** to rotate in unison with the vane arm in contact with the cam **292**. In this manner, all of the vanes are pivoted in unison when the stop member is rotated.

A calibration process for a variable-nozzle assembly using the calibration fixture **20** is now explained. With the variable-nozzle assembly **200** installed in the fixture as described above, a source of fluid (e.g., air) is coupled to the fluid supply passage **112** of the housing **100**. The fluid source is operated to supply fluid into the housing at a specified flow rate. The fluid flows from the chamber **110** through the spaces between the vanes **220** and then through the tubular part **252** of the insert **250** and is discharged from the second portion **108** of the passage in the housing.

While the fluid is flowing, the operator inserts a suitable tool through the aperture **122** in the cover **120** and engages it with the stop member **290** in the variable-nozzle assembly. The operator turns the stop member while monitoring the flow rate of the fluid, which can be measured by a suitable flow meter associated with the fluid source. The stop member is turned until the indicated flow rate reaches a predetermined level (e.g., a minimum flow rate, or alternatively a specified quantitative flow rate). The fluid source is then turned off and the cover **120** is removed, and the variable-nozzle assembly **200** is removed from the housing **100**.

The stop member **290** is then permanently fixed in the position determined during the calibration process, such as by welding the stop member to the nozzle ring **210** or by press-fitting the stop member (while preventing it from rotating) into a tapering or reduced-diameter portion of the receptacle such that the stop member is immobilized by frictional interference fit.

The variable-nozzle assembly **200** calibrated according to the above-described process is ready for installation into a turbocharger. After such installation, further calibration will not be necessary. The invention thus substantially simplifies and speeds up the overall turbocharger assembly process.

Many modifications and other embodiments of the inventions set forth herein will come to mind to one skilled in the art to which these inventions pertain having the benefit of the teachings presented in the foregoing descriptions and the associated drawings. Although specific terms are employed herein, they are used in a generic and descriptive sense only and not for purposes of limitation.

WHAT IS CLAIMED IS:

1. A process for calibrating a variable-nozzle assembly for a turbine of a turbocharger prior to installation of the variable-nozzle assembly in the turbocharger, comprising the steps of:

installing the variable-nozzle assembly in a calibration fixture having internal flowpath contours configured to substantially replicate corresponding internal flowpath contours of a turbocharger into which the variable-nozzle assembly is to be installed, the calibration fixture defining a generally annular chamber in fluid communication with a flow path defined in the variable-nozzle assembly, and a fluid supply passage extending from an outer surface of the calibration fixture into the annular chamber;

connecting a fluid source to the fluid supply passage of the fixture and causing a flow of fluid from the fluid source to the fluid supply passage, the fluid then flowing through the flow path of the variable-nozzle assembly; and

adjusting a setting angle of the vanes while the fluid is flowing through the variable-nozzle assembly to cause the fluid to have a flow rate equal to a predetermined flow rate.

2. The process of claim 1, wherein the variable-nozzle assembly comprises a generally annular nozzle ring defining a plurality of circumferentially spaced bearing apertures therethrough, a plurality of the vanes proximate one face of the nozzle ring and each having a vane shaft extending through a respective one of the bearing apertures such that a distal end of each vane shaft is proximate an opposite face of the nozzle ring, and a plurality of vane arms having first ends respectively affixed to the distal ends of the vane shafts and having opposite second ends engaged by a unison ring that is rotatable relative to the nozzle ring about a central longitudinal axis of the variable-nozzle assembly such that rotation of the unison ring causes the vane arms and the vane shafts to pivot about respective axes thereof so as to rotate the vanes to a different setting angle, the variable-nozzle assembly further comprising an insert spaced from the nozzle ring such that the vanes are disposed between the nozzle ring and a portion of the insert, the insert having a tubular part extending along the longitudinal axis for being received in a turbine housing bore of a turbocharger; and

wherein the calibration fixture includes a housing and a cover, the housing defining a central passage extending from a first end at a first face of the housing through to an

opposite second end at a second face of the housing, the central passage having a first portion adjacent the first face that is configured to receive the nozzle ring, a second portion sized to receive the tubular part of the insert in a substantially sealed manner, and a third portion disposed generally between the first and second portions to form the generally annular chamber surrounding a central longitudinal axis of the housing, the fluid supply passage being defined in the housing, the cover being configured to engage the housing proximate the first face thereof to substantially close the first end of the central passage.

3. The process of claim 2, wherein the installing step comprises disposing the variable-nozzle assembly in the housing with the tubular part of the insert substantially sealingly received in the second portion of the central passage, and wherein the vane arms of the vanes are in a baseline position when the flow rate equals the predetermined flow rate.

4. The process of claim 2, further comprising the step of affixing a stop member to the nozzle ring, the stop member being structured and arranged to prevent the vane arms from pivoting in one direction past the baseline position, while allowing the vane arms to pivot in an opposite direction away from the baseline position.

5. The process of claim 4, wherein the stop member is engaged in a receptacle defined in the opposite face of the nozzle ring such that the stop member is rotatable about an axis thereof, the stop member having an eccentric cam positioned to engage one of the vane arms such that rotation of the stop member about its axis in one direction causes the cam to urge the vane arm to pivot about the respective vane shaft's axis, the vane arm in turn causing the unison ring to rotate and thereby pivot the other vane arms in unison, and wherein the step of adjusting the setting angle of the vanes comprises rotating the stop member.

6. The process of claim 5, wherein the cover includes an opening therethrough aligned with the stop member, and the step of rotating the stop member comprises passing an end of a tool through the opening in the cover and engaging the tool end with the stop member for rotating the stop member.

7. The process of claim 5, further comprising the step, following the adjusting step, of fixing the stop member in a substantially permanent manner in the position of the stop member that causes the flow rate to equal the predetermined flow rate.

8. The process of claim 2, wherein the housing is provided to have internal surfaces configured to substantially replicate corresponding surfaces of a turbine housing of a turbocharger into which the variable-nozzle assembly is to be installed, and the cover is provided to have internal surfaces configured to substantially replicate corresponding surfaces of a center housing of the turbocharger.

9. A variable-nozzle assembly for a turbocharger, comprising:

a generally annular nozzle ring defining a plurality of circumferentially spaced bearing apertures therethrough;

a plurality of vanes proximate one face of the nozzle ring and each having a vane shaft extending through a respective one of the bearing apertures such that a distal end of each vane shaft is proximate an opposite face of the nozzle ring;

a plurality of vane arms having first ends respectively affixed to the distal ends of the vane shafts and having opposite second ends engaged by a unison ring that is rotatable relative to the nozzle ring about a central longitudinal axis of the variable-nozzle assembly such that rotation of the unison ring causes the vane arms and the vane shafts to pivot about respective axes thereof so as to rotate the vanes to a different setting angle, the variable-nozzle assembly further comprising an insert spaced from the nozzle ring such that the vanes are disposed between the nozzle ring and a portion of the insert, the insert having a tubular part extending along the longitudinal axis for being received in a turbine housing bore of a turbocharger, the variable-nozzle assembly defining a flow path between the nozzle ring and the portion of the insert and through passages between the vanes such that a fluid can flow generally radially inwardly along the flow path and then through the tubular part; and

a stop member affixed to the nozzle ring, the stop member being structured and arranged to prevent the vane arms from pivoting in one direction past a baseline position of the vane arms, while allowing the vane arms to pivot in an opposite direction away from the baseline position.

10. The variable-nozzle assembly of claim 9, wherein the stop member is engaged in a receptacle defined in the opposite face of the nozzle ring such that the stop member is

rotatable about an axis thereof, the stop member having an eccentric cam positioned to engage one of the vane arms such that rotation of the stop member about its axis in one direction causes the cam to urge the vane arm to pivot about the respective vane shaft's axis, the vane arm in turn causing the unison ring to rotate and thereby pivot the other vane arms in unison.

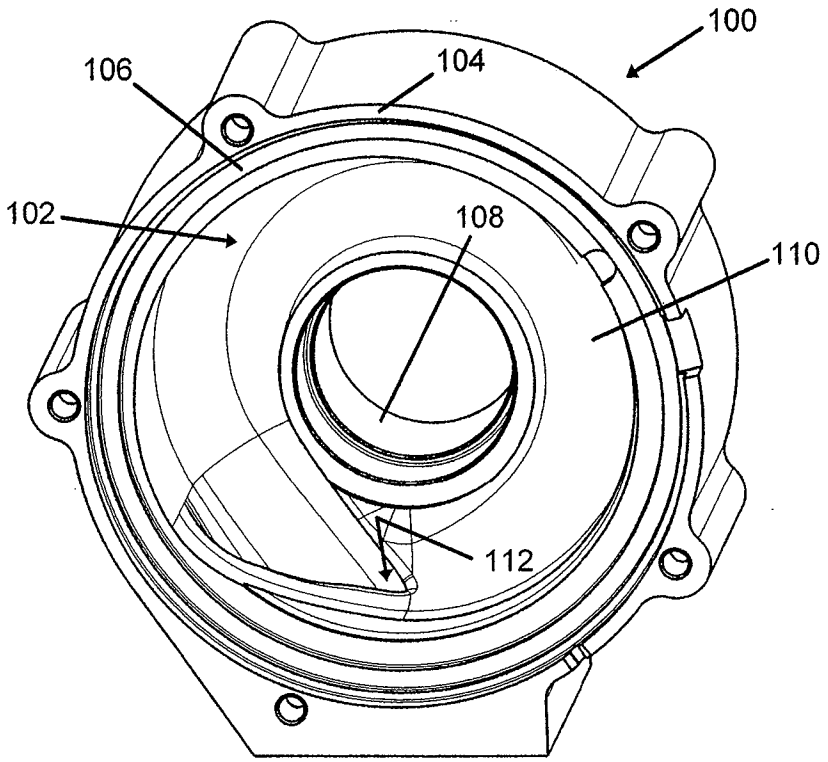

FIG. 1

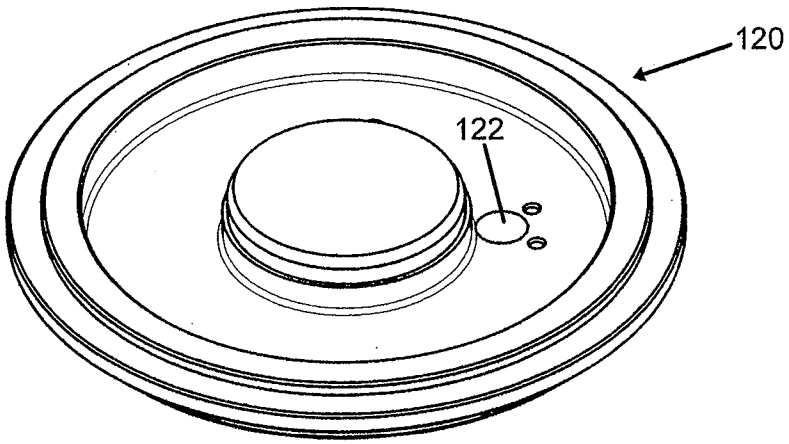

FIG. 2

FIG. 3

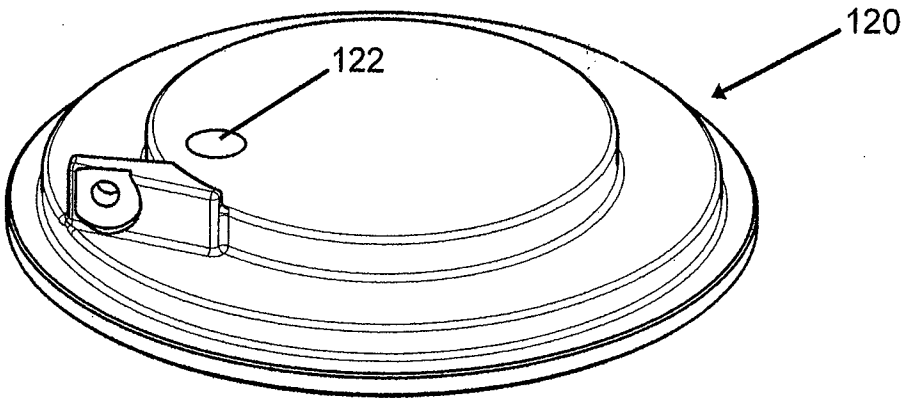
120
122

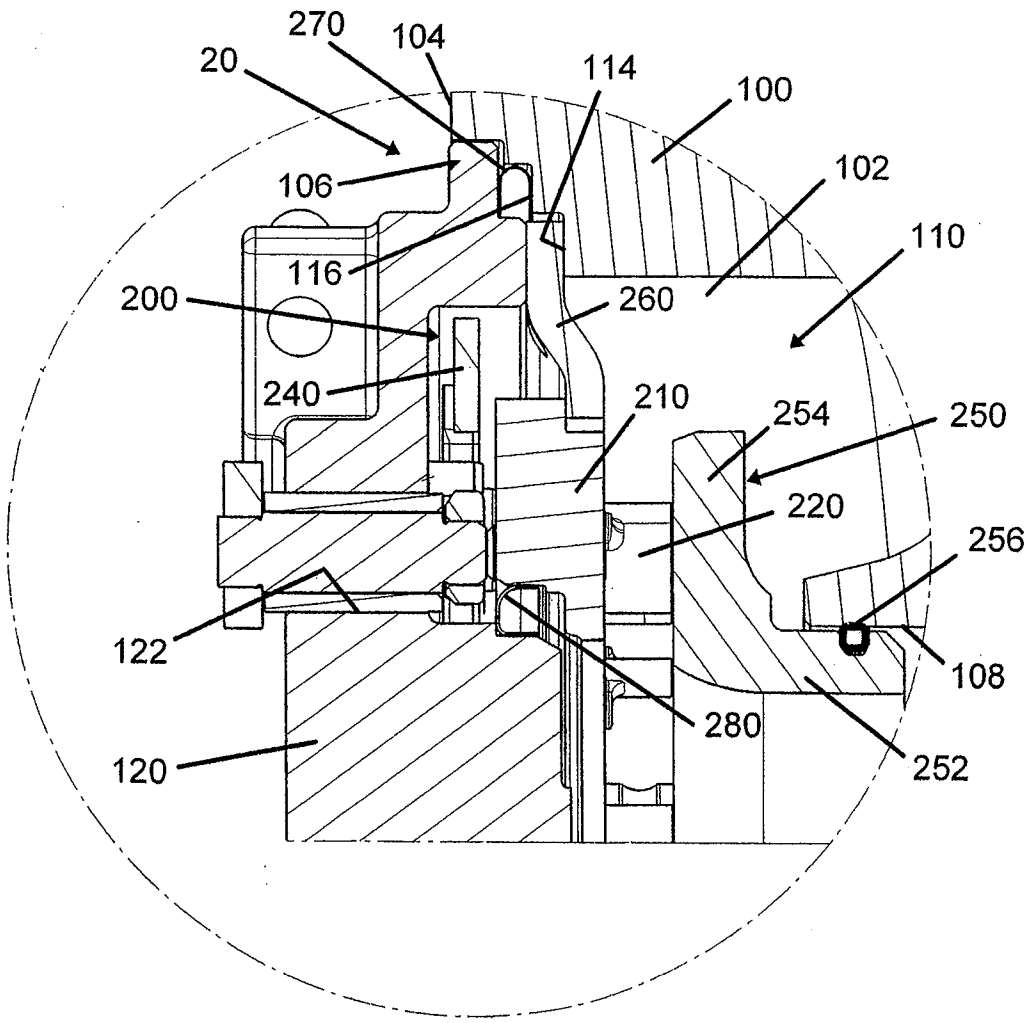
270
104
20
114
100
106
102
116
110
200
260
240
210
254
250
220
256
122
108
280
120
252

FIG. 4

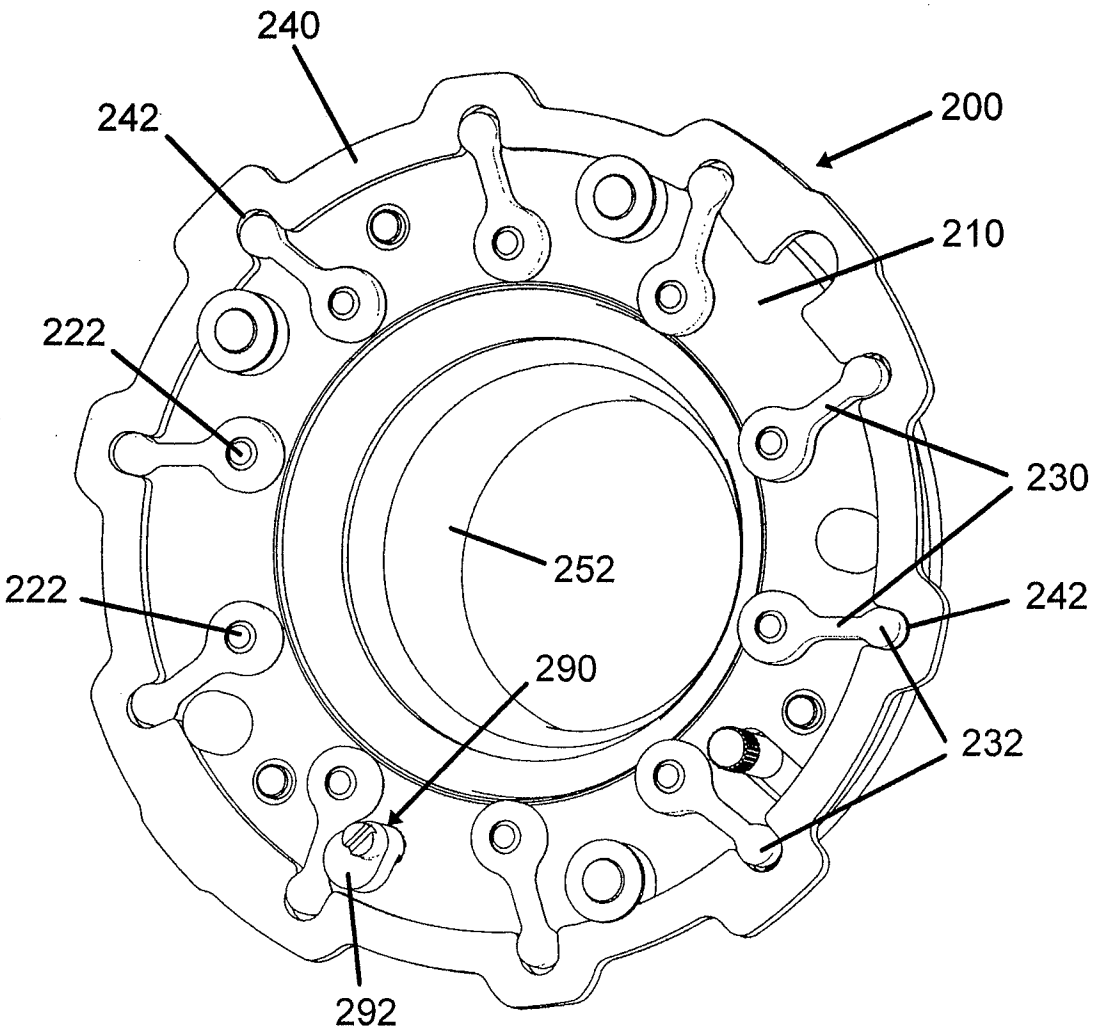

FIG. 5

INTERNATIONAL SEARCH REPORT

International application No
PCT/US2009/031940

A. CLASSIFICATION OF SUBJECT MATTER
INV. F01D17/16

According to International Patent Classification (IPC) or to both national classification and IPC

B. FIELDS SEARCHED

Minimum documentation searched (classification system followed by classification symbols)
F01D F02B F02C G01F

Documentation searched other than minimum documentation to the extent that such documents are included in the fields searched

Electronic data base consulted during the international search (name of data base and, where practical, search terms used)
EPO-Internal, WPI Data

C. DOCUMENTS CONSIDERED TO BE RELEVANT

Category*	Citation of document, with indication, where appropriate, of the relevant passages	Relevant to claim No.
X	EP 1 867 840 A (HONEYWELL INT INC [US]) 19 December 2007 (2007-12-19)	1
A	paragraphs [0051], [0058]; figures 1,2	2-10
Y	EP 1 304 462 A (TOYOTA MOTOR CO LTD [JP]; TOYOTA JIDOSHOKKI KK [JP]) 23 April 2003 (2003-04-23)	9
A	paragraphs [0004], [0015], [0043], [0044]; figures 1-7	1-8,10
Y	EP 1 635 040 A (BORG WARNER INC [US]) 15 March 2006 (2006-03-15)	9
A	the whole document	1-8,10
A	DE 100 35 762 A1 (DAIMLER CHRYSLER AG [DE]) 31 January 2002 (2002-01-31) paragraphs [0008], [0009], [0027] - [0029]; figures 1-4	1-9

-/--

[X] Further documents are listed in the continuation of Box C.

[X] See patent family annex.

* Special categories of cited documents :

"A" document defining the general state of the art which is not considered to be of particular relevance

"E" earlier document but published on or after the international filing date

"L" document which may throw doubts on priority claim(s) or which is cited to establish the publication date of another citation or other special reason (as specified)

"O" document referring to an oral disclosure, use, exhibition or other means

"P" document published prior to the international filing date but later than the priority date claimed

"T" later document published after the international filing date or priority date and not in conflict with the application but cited to understand the principle or theory underlying the invention

"X" document of particular relevance; the claimed invention cannot be considered novel or cannot be considered to involve an inventive step when the document is taken alone

"Y" document of particular relevance; the claimed invention cannot be considered to involve an inventive step when the document is combined with one or more other such documents, such combination being obvious to a person skilled in the art.

"&" document member of the same patent family

Date of the actual completion of the international search	Date of mailing of the international search report
20 May 2009	03/06/2009

Name and mailing address of the ISA/	Authorized officer
European Patent Office, P.B. 5818 Patentlaan 2 NL - 2280 HV Rijswijk Tel. (+31-70) 340-2040, Fax: (+31-70) 340-3016	Koch, Rafael

INTERNATIONAL SEARCH REPORT

International application No
PCT/US2009/031940

C(Continuation). DOCUMENTS CONSIDERED TO BE RELEVANT

Category*	Citation of document, with indication, where appropriate, of the relevant passages	Relevant to claim No.
A	WO 2007/134787 A (BORG WARNER INC [US]; BOENING RALF [DE]; METZ DIETMAR [DE]) 29 November 2007 (2007-11-29) the whole document	1-10
A	EP 0 227 475 A (ISHIKAWAJIMA HARIMA HEAVY IND [JP]) 1 July 1987 (1987-07-01) the whole document	1-10
A	EP 1 236 867 A (MITSUBISHI HEAVY IND LTD [JP]) 4 September 2002 (2002-09-04) paragraphs [0011], [0012], [0015] - [0017], [0047]; figures 7,8	1-9

INTERNATIONAL SEARCH REPORT

Information on patent family members

International application No
PCT/US2009/031940

Patent document cited in search report	Publication date	Patent family member(s)	Publication date
EP 1867840 A	19-12-2007	US 2007286716 A1	13-12-2007
EP 1304462 A	23-04-2003	DE 60216696 T2	04-10-2007
		ES 2278854 T3	16-08-2007
		JP 3809361 B2	16-08-2006
		JP 2003129853 A	08-05-2003
EP 1635040 A	15-03-2006	NONE	
DE 10035762 A1	31-01-2002	FR 2812031 A1	25-01-2002
		IT RM20010435 A1	23-01-2003
		US 2002023438 A1	28-02-2002
WO 2007134787 A	29-11-2007	EP 2018480 A1	28-01-2009
		KR 20090010199 A	29-01-2009
EP 0227475 A	01-07-1987	DE 3671654 D1	05-07-1990
		US 4741666 A	03-05-1988
EP 1236867 A	04-09-2002	AT 416301 T	15-12-2008
		BR 0200633 A	10-12-2002
		JP 3482196 B2	22-12-2003
		JP 2002256879 A	11-09-2002
		KR 20020070847 A	11-09-2002
		US 2003077167 A1	24-04-2003