PCT WORLD INTELLECTUAL PROPERTY ORGANIZATION
International Bureau

INTERNATIONAL APPLICATION PUBLISHED UNDER THE PATENT COOPERATION TREATY (PCT)

(51) International Patent Classification 5 :		(11) International Publication Number:
A61K 39/00, 43/00, 49/02 A61M 1/36	A1	WO 92/12730
		(43) International Publication Date: 6 August 1992 (06.08.92)

(21) International Application Number: PCT/SE92/00020

(22) International Filing Date: 15 January 1992 (15.01.92)

(30) Priority data:
9100142-0 17 January 1991 (17.01.91) SE

(71)(72) Applicants and Inventors: NILSSON, Rune [SE/SE]; Utsättaregränden 139, S-226 47 Lund (SE). LINDGREN, Lars [SE/SE]; Spexarevägen 6A, S-223 71 Lund (SE). NORRGREN, Kristina [SE/SE]; Bladvägen 24, S-232 53 Åkarp (SE). SANDBERG, Bengt [SE/SE]; Blomstergården 18, S-222 48 Lund (SE). SJÖGREN, Hans, Olof [SE/SE]; Brynjegränden 1, S-223 75 Lund (SE). STRAND, Sven-Erik [SE/SE]; Tenorgränd 3, S-223 68 Lund (SE).

(74) Agent: BOBERG, Gunnar; Gambro AB, Box 101 10, S-220 10 Lund (SE).

(81) Designated States: AT (European patent), BE (European patent), CA, CH (European patent), DE (European patent), DK (European patent), ES (European patent), FI, FR (European patent), GB (European patent), GR (European patent), IT (European patent), JP, LU (European patent), MC (European patent), NL (European patent), NO, SE (European patent), US.

Published
With international search report.

(54) Title: A METHOD AND A SYSTEM FOR ENHANCED *IN VIVO* CLEARANCE OF DIAGNOSTIC AND/OR THERAPEUTIC AGENTS BY EXTRACORPOREAL DEPLETION, AND THE USE OF SAID AGENTS FOR SAID PURPOSE

(57) Abstract

A method and a system is described for reducing non-target levels of specific molecules intended for diagnostic and/or therapeutic applications to vertebrate hosts, wherein said molecules are administered to a vertebrate host and kept therein for a certain time in order to be concentrate to the target by being attached thereto. The molecules which are not attached to the target are removed from the blood circulation system or at least reduced to a lower concentration by passing the blood through an extracorporeal device.

FOR THE PURPOSES OF INFORMATION ONLY

Codes used to identify States party to the PCT on the front pages of pamphlets publishing international applications under the PCT.

AT	Austria	**FI**	Finland	**ML**	Mali
AU	Australia	**FR**	France	**MN**	Mongolia
BB	Barbados	**GA**	Gabon	**MR**	Mauritania
BE	Belgium	**GB**	United Kingdom	**MW**	Malawi
BF	Burkina Faso	**GN**	Guinea	**NL**	Netherlands
BG	Bulgaria	**GR**	Greece	**NO**	Norway
BJ	Benin	**HU**	Hungary	**PL**	Poland
BR	Brazil	**IE**	Ireland	**RO**	Romania
CA	Canada	**IT**	Italy	**RU**	Russian Federation
CF	Central African Republic	**JP**	Japan	**SD**	Sudan
CG	Congo	**KP**	Democratic People's Republic of Korea	**SE**	Sweden
CH	Switzerland			**SN**	Senegal
CI	Côte d'Ivoire	**KR**	Republic of Korea	**SU**	Soviet Union
CM	Cameroon	**LI**	Liechtenstein	**TD**	Chad
CS	Czechoslovakia	**LK**	Sri Lanka	**TG**	Togo
DE	Germany	**LU**	Luxembourg	**US**	United States of America
DK	Denmark	**MC**	Monaco		
ES	Spain	**MG**	Madagascar		

TITLE

A METHOD AND A SYSTEM FOR ENHANCED IN VIVO CLEARANCE OF DIAGNOSTIC AND/OR THERAPEUTIC AGENTS BY EXTRACORPOREAL DEPLETION, AND THE USE OF SAID AGENTS FOR SAID PURPOSE

DESCRIPTION

The present invention relates to a method and a system for reducing non-target levels of specific molecules intended for diagnostic and/or therapeutic applications to vertebrate hosts. In particular, it relates to methods, compositions and means for the extracorporeal removal from the blood circulation of exogenous targeting molecules pre-labelled with a specific affinity ligand which can bind with high affinity to a corresponding receptor immobilized to an extracorporeal device.

The invention is applicable to the removal of any type of exogenous targeting molecule from the blood circulation, provided that these agents are targeted to a specific type of tissue, a specific type of cell or a specific type of extra-cellular or intra-cellular marker, and provided that this targeting molecule can be labelled with an affinity ligand without severely effecting the intrinsic affinity and specificity of the targeting molecule. A second requirement is the availability of a receptor to which the affinity ligand has a high affinity, and which in its immobilized form could be used to eliminate the targeting molecule from the blood circulation without affecting endogenous blood components or other exogenous administered components.

Antibodies have been found useful as targeting vehicles for diagnostic and therapeutic agents, inter alia radioisotopes, magnetic resonance imaging agents, enzymes, toxins and cytotoxic drugs or prodrugs. These have been used especially in diagnosis or treatment, of cancer. Commonly, antibodies conjugated to diagnostic or therapeutic agents have been administered systemically, but other modes of administration have also been used.

In general, present immunotherapeutic strategies involve the administration of exogenous

(non-human) antibodies to the patient. These antibodies are intended to interact only with a specific sub-set of cells while leaving the other cells unaffected. The antibodies are usually conjugated to a letal agent such as cytotoxic drugs or radioactive isotopes. In these cases, the therapeutic principle will be based entirely on the effect of the exogenously added therapeutic agent. Antibodies can also alone trigger a cytotoxic effect on cells exposing antigens to which the antibodies bind specifically. This is likely to be caused by two different but immunologically related mechanisms. One of these mechanisms, the antibody-dependent cell-mediated cytotoxicity (ADCC), acts through activation of cytotoxic lymphocytes. In the second case, cell lysis is dependent on complement activation which is triggered by antibodies bound to the specific cells. The conceptual simplicity of localizing tumours with radiolabelled antibodies in conjunction with external imaging has led to a great deal of research activities over the past years. Although techniques have improved, the clinical results are still hampered by some major limitations. Several of these limitations are due to parameters which are patient-dependent and can clearly not be altered.

The most important single determinant of detection sensitivity is, nevertheless, the uptake ratio of the localizing antibody on the tumour compared with the same antibody on surrounding normal tissues. Consequently, most work has centered on attempts to improve this uptake ratio with, as yet, limited success. Earlier work in this field has been based on polyclonal antibodies. The development of monoclonal antibodies would seem to have created ideal probes for these attempts. Monoclonal antibodies can be raised to tumour-selective antigens and because of the extremely high specificity there would be very little cross-reactivity with other cell markers, and consequently no, or very little, interaction with cells lacking these markers. However, human studies using mostly mouse monoclonal antibodies have, by and large, been disappointing in that respect. The extreme specificity of monoclonal antibodies, particularly if these antibodies recognize only one epitope per antigen might in some cases lead to a disadvantage in so far that a too small quantity of antibodies will be bound to the target cells, particularly if the number of accessible antigens is small. Mouse monoclonal antibodies, might also in spite of their intrinsic specificity, produce falsely positive localization due to their interaction with human Fc receptors on non-target cells. To overcome these problems, attempts have been made to use immunological fragments derived from monoclonal antibodies. Apart from the fact that these fragments most often lack the ability to interact with cells by non-idiotypic binding,they should also gain access to the target cells more readily than the intact molecule. Smaller molecules like Fab and $F(ab)_2$ fragments

do indeed penetrate more rapidly into the tumour (Matzku et al., Int.J.Cancer Suppl. 2, 1988, 11).However, the driving force causing a favourable diffusion of labelled antibodies into tumours is mainly dependent on the concentration gradient (Weinstein et al., Ann. N.Y. Acad.Sci., 1988, 199). Consequently, the blood concentration over time might be more important than the molecular size. Although the uptake of antibody fragment into the tumour might be higher, there is also likely to be a faster secretion of the antibody moieties into the urine. This is supported by data showing that the tumour concentration of antibodies was higher using intact antibody than using the corresponding antibody fragments (Wilbanks et al., Cancer 48, 1981, 1768).

Another approach has been the subtraction of background activity by simultaneous injection of non-target specific antibodies, carrying a second isotope. The latter should mimic the non-specific distribution of the tumour-directed antibody but emits a different photon energy. The two images are then subtracted. Although, this technique should in theory improve the contrast, there are, however , several practical problems. According to Bradwell et al. (Immunology Today 6, 1985, 163) artefacts may result from differences in energy between the two isotopes leading to positioning variability and different tissue attenuation of the gamma rays. Secondly, if the in vivo characteristics of the two isotopes are dissimilar, there will be a differential organ accumulation of the two detached isotopes. For example, the bladder always contains an excess of free iodine or technetium which leads to hot or cold areas. Inequalities may also occur around the heart or stomach. Thirdly,the process of subtraction, whilst improving contrast, introduces additional statistic fluctuations without increasing the signal. A further disadvantage of this method is that the enhancement of contrast is achieved at the expense of introducing additional radioactive material into the body.

Methods have also been described to enhance the clearance of residual circulating antibodies from the blood circulation. It has been suggested that this could be achieved either by the administration of a second antibody or by modification of the carbohydrate part of the antibody or the antibody conjugate to enhance clearance by hepatic cells. In the former approach, a second antibody which specifically binds to the primary imaging antibody is administered. The second antibody is injected into the patient after sufficient time has elapsed following injection of the primary antibody.The time differece should permit maximum

selective uptake of the primary antibody in the tumour to be imaged or treated therapeutically. The second antibodies will form aggregates with unbound imaging antibodies and these aggregates will then be cleared from the blood circulation of the patient through the body's own reticuloendothelial system. There are, however, conflicting views among experts in the field whether this is a feasible method or not (A.Klausner Biotechnology, 5, 1987,533). Such a method would for example mask several vital organs like spleen, lung, kidney and liver, since these are the organs mainly resposible for the uptake and clearace of the artificially induced immune complexes, referred to as aggregates.It should be noted that even if the primary tumour is not associated with the liver, this organ is nevertheless highly subseptible to metastasis. One also has to consider the risk of fluid phase complement activation caused by a relatively large amount of circulating immune complexes, which could theoretically lead to passive serum sickness. From a therapeutic point of view, one has to worry about the possible damage the conjugated toxins or radio-isotope might do to the cells of the spleen and other organs taking care of the " toxic waste". It is likely that these cells over a limited period of time will be exposed to irradiation or toxins of a magnitude close to the maximal tolerable dose of these sensitive organs. Alternative avenues to manipulate the blood clearance rate have recently been presented by M.J. Mattes, J.Natl.Cancer Inst. 79 ,1987,855. Contrary, to the method of secondary antibody this method of blood clearance utilizes the hepatocytes rather than the reticulo-endothelial system. According to the latter method enhanced blood clearance can be induced either by better exposing glycoside residues normally associated with the antibodies or by introducing such residues on the antibodies or antibody conjugates through synthetic means. Some of these glycosides will bind tightly to lectin residues exposed on normal hepatic cells, and provided the number of such residues are sufficiently high, the antibodies or antibody conjugates will be accumulated in the liver and thereby cleared from the blood circulation. Radiolocalization studies have shown that target/ non-target radioactivity ratios may be significally improved by introducing a two stage system in which radiolabelled avidin is administered following the injection of a biotinylated antibody (Paganelli,G. et al., Int.J.Cancer.Suppl. 2, 1988, 121; Oehr,P. et al. J.Nuclear.Med. 29, 1988, 728), or, alternatively, if radiolabelled biotin is injected following the administration of avidin-antibody conjugates (Hnatowich,D.D. et al. J.Nuclear Med 28, 1987, 1294). In general, these methods would suffer from drawbacks similar to those of the second antibody approach. The liver will be the recipient of the toxic waste and this vital organ will be masked for imaging.Futhermore, it should be difficult to use this method successfully if an

antibody accumulation in the target site is orders of magnitude slower than accumulation in the liver. This method would also require a great deal of enzymatic or organic synthetic manipulation on the active component i.e. the antibody conjugate.

Specific removal of antibodies from the blood circulation by extracorporeal means is commonly applied in the therapy of immune-related disorders. The first attempt to remove endogenous antibodies from blood by employing hemoperfusion through a porous gel was described by Schenkein et al. in 1971 (Schenkein et al. J.Clin.Invest. 50, 1971, 1864). Somewhat later, Terman and co-workers (Lancet 2, 1979, 824) presented a technique in which a patient suffering from systemic lupus erythematosus was successfully treated by passing the patients plasma through a collodion-charcoal device. Extracorporeal techniques have also been used to overcome blood-group incompatibility. Blood treatment systems for the removal of anti-A and anti-B antibodies utilizing a technique in which synthetic blood-group antigens are covalently linked to a matrix have been described (Bensinger et al. N.Engl.J.Med.304, 1981, 160). Protein A covalently linked to a sepharose matrix has been used with the purpose to remove immunoglobulins from the blood-circulation in patients suffering from autoimmune diseases or from hyperimmunized patients. The principle out-line of such a system has been presented (Larsson, L.Å. et al, In Progress in artificial organs; Nosey, Kjellstrand, Ivanovich, eds., Cleveland,ISAO Press 1985, p902). Systems based on this principle have been used to reduce the level of anti-HLA antibodies prior to kidney transplantation of hyperimmunized patients (Palmer,A. et al., Lancet i, 1989, 10), and to remove anti-FVIII or anti-FIX antibodies to enable a successful treatment of heamophilia patients with factor extracts (Nilsson,I.M. et al., Blood 52, 1981, 38).

A system for the extracorporeal adsorption of immunoglobulins and circulating immune complexes utilizing columns where protein A has been covalently linked to a silica matrix is descibed in U.S. Patent No. 4,681,870.The extracorporeal removal of endogenous antibodies produced in response to treatment with exogenous antibody have been presented in the European Patent Application No.88309909.5. Removal of specific antibodies from whole blood in a continuous extracorporeal system has also been described (Nilsson, I.M.,et al., Plasma Ther.Transfus.Technol. 5, 1984,
127).

A diagnostic concept.

This innovation can be utilized for diagnostic purposes in different ways. It can, for instance, be used with immunoscintigraphy for detection/localization of residule tumour growth and the presence of metastases. Another principle application is named immuno-guided surgery, where it can be used to better locate and define the border-line between tumour and normal tissues at the surgical procedure.

In the following general description of the techniques, the tumour targeting molecule is examplified by monoclonal antibodies and the extracorporeal adsorbent by avidin-columns.

The technology is based on increased uptake of radioactivity in tumour tissue compared to normal tissues. The radioactivity is selectively targeted to the tumour by using molecules specific for tumour antigens e.g.monoclonal antibodies. The distribution of radioactivity in the body is imaged by a scintillation camera.

The procedure involves the following steps:

Administration of radiolabelled immunoconjugate:

Tumour-selective monoclonal antibodies, labelled with a gamma-emitting radionuclide and conjugated with biotin, are injected into the patient. The immunoconjugate will distribute throughout the body and selectively target to areas with tumour growth.

Depletion of circulating immunoconjugate:

After a certain time, normally one to two days after the injection of the immunoconjugate, the uptake in the tumour has usually reached a maximum. However, only a small portion of the injected activity is localized to the tumour and most of the immunoconjugate is distributed in the circulation and the normal tissues. This excess of immunoconjugate increases the background and should be removed in order to improve the immunoscintigraphy. The depletion is performed by extracorporeal immunoadsorption of plasma through an avidin-column. Blood is drawn from the patient and continuously passed through a plasma separation

device i.e. a plasma filter or an on-line centrifuge, the plasma is then passed through an avidin-adsorbent and the depleted plasma is mixed with the blood and returned to the patient. By this procedure about 90-95 % of the immunoconjugate,i.e. the targeting molecule carring the affinity ligand, is removed from the blood circulation after processing of about three times the plasma volume. The invention includes, however, also the possibility that the immuno-conjugate is removed directly from whole blood.

Detection of radioactivity:

Immunoscintigraphy.

After termination of the extracorporeal treatment, the patient is placed in front of a scintillation camera and the distribution of radioactivity in the body is imaging with either planar or tomografic techniques. The tumour-to-background ratio in the images is improved. The immunoscintigraphic analysis may be repeated on day one or two.

Immuno-guided surgery.

Following termination of the extracorporeal procedure, the patient is ready for surgery. During surgery,the border-line between tumour and normal tissues is defined by the use of a hand-operated radioactivity detection probe.

A therapeutic concept.

The basis for this therapy is that tumour-selective agents e.g. monoclonal antibodies is used for selective targeting of tumour killing or tumour retarding substances to the tumour. The anti tumour agent might incorporate radionuclides, toxins, cytostatics, enzymes that activate prodrugs, or other suitable drugs linked to the antibodies. However, many of these agents might at higher concentration have cytotoxic or cystostatic effects on normal cells resulting in undesirable side effects in the patient. Even in the case of a highly tumour-selective targeting molecule (e.g. monoclonal antibody), only a small portion of the substance will be localized to the tumours. The remaining will be present in the blood circulation and in normal tissues. The innovation described in this patent application can be utilized for elimination of the circulating toxic substances from the blood, resulting in decreased side effects on normal

tissues.

The immunoconjugates to be used in connection with this innovation consist of three principal parts; a tumour-targeting module (e.g. a monoclonal antibody), an anti-tumour module (e.g. radionuclides, drugs etc), and an affinity ligand (e.g. biotin). The conjugate can be removed by utilizing the biospecific interaction with the affinty ligand (e.g. an avidin-adsorbent). Two or all three said functions may, however, be provided by one and the same molecule.

The procedure involves the following steps:

Administration of therapeutic immunoconjugate:

Tumour-selective monoclonal antibodies, conjugated with an anti-tumour agent, and labelled with preferably biotin, are administrated to the patient. The immunoconjugate will distribute throughout the body and selectively target to areas with tumour growth.

Depletion of circulating immunoconjugate:

After a certain time, normally one to two days after the injection of the immunoconjugate, the uptake in the tumour has reached a maximum. However, only a small portion of the injected dose is localized to the tumour and most of the immunoconjugate is distributed in the circulation and normal tissues. This excess of immunoconjugate increases the risk of side effects and have to be removed in order to improve the therapy. The depletion is performed by extracorporeal immunoadsorption of plasma, preferably by utilizing an avidin-column. Blood is drawn from the patient and continuously passed through a plasma separation device i.e plasma filter or on-line centrifuge. The plasma is then passed through an avidin-adsorbent and the depleted plasma is mixed with the blood and returned to the patient. By this procedure about 90-95 % of the immunoconjugate, present in the blood, is removed after processing of about three times the plasma volume. The invention includes, however, also the possibility that the immunoconjugate is removed directly from whole blood.

The injection of immunoconjugate and the subsequent removal of the excess of this toxic conjugate from the circulation may have to be repeated dependent on the nature of the

neoplastic disease.

Embodiments:

The method of the present invention relies on the specific removal of previously administered synthetically modified target-specific agents from the blood-circulation in a host to be treated. Removal of these targeting molecules are achieved by the use of a specific adsorbent device having immobilized receptors specific to the affinity ligand. The latter may be covalently bound to the original targeting molecule. Such targeting molecules may constitute proteins, carbohydrates or polynucleotides or may contain parts of these structural elements. Amomg proteins are the antibodies which could be of different isotypes and could originate from any species. Of particular interest are the monoclonal antibodies and derivatives thereof. The latter include enzymatically produced fragments such as the $F(ab')_2$, F(ab'), F(ab) and the like. They also include genetically engineered hybrids or chemically synthesized peptides based on the specificity of the antigen binding region of one or several target specific monoclonal antibodies e.g. chimeric antibodies, single chain antibodies etc.

The present invention may rely on the ability of covalent attachment of a specific affinity ligand onto the targeting molecule in a manner that does not severely affect the affinity and/or specificity of the targeting molecule in its interaction with the desired target cell. The affinity ligand may be any molecule which can be covalently attached to the targeting molecule.For therapeutic purposes the affinity ligand and the cytotoxic agent may constitute one single molecule to be attached to the targeting macromolecule. Cytotoxic agents,such as radionuclides , drugs or prodrugs may also be introduced directly on to the affinity ligand before or after attaching the affinity ligand to the targeting molecule.The affinity ligand may also be a prodrug. Furthermore, the affinity ligand may in addition also serve as an activator of prodrugs. In that case, the activator(e.g. an enzyme) being linked to the targeting molecule, may convert a prodrug to an active drug or toxin on(or close to) the target site (Senter, P.D. FASEB J. 4,188,1990). For the application of in vivo diagnosis, the targeting molecule should carry an imaging agent, such as a radioisotope or a magnetic resonance imaging agent. These could be introduced directly onto the targeting molecule or the affinity ligand or the conjugate of the two. Although the affinity ligand may vary, biotin or derivatives thereof, e.g. 2-iminobiotin, desthiobiotin, diaminobiotin,would fulfill most of the requirements for this application. Biotin has an exceptionally high affinity for its receptor i.e.

avidin or streptavidin. Biotin is easily coupled to antibodies often without loss of binding capacity. The biotin-avidin complex has a very small dissociation rate constant leading to an extremely long half life of the complex.

Biotinylation of proteins such as immunoglobulins can be achieved through various means. The amino groups in proteins can easily be conjugated by the use of biotinyl-p-nitrophenyl esters or biotinyl-N-succinimide esters. The coupling can also be achieved by direct coupling with carbodiimide, particularly watersoluble derivatives of the latter. In some cases it may be an advantage to use spacers of various length like caproylamidobiotinyl esters. Alternative ways of preparing biotin derivatives active with groups other than amino groups are also commonly used. Among these are biotinyl hydrazide which reacts with sugar and nucleic acid residues and biotinyl-bromoacetyl hydrazide or biotin maleimide which reacts with sulfhydryls and other strong nucleophiles. Biotinyl-diazoanilide can be used to conjugate biotin to phenol or imidazole functions. There are also other means by which the carboxyl group of the valeric acid side chain can be activated or converted to a reactive function.

The receptor to which the affinity ligand has a high affinity may be immobilized to various types of solid supports. The coupling method of choice will depend on the nature of the receptor as well as the nature of the immunosorbent support matrix. For protein based receptors, functional groups such as hydoxyl- , amino- , carboxyl- or thiol-groups may be utilized. Glycoproteins may be coupled to the matrix via their glycoresidues. The solid support may also be activated to enable binding of the receptor by means in which the receptor forms linkages with the solid support through specific or non-specific reaction with the side-chains or the backbone structure of the receptor protein. The linkage between the solid support and the receptor may also be of non-covalent nature, where electrostatic or hydrophobic forces are utilized. Apart from the biotin / avidin system other combinations of affinity ligand and corresponding receptors can be used within the scope of this invention. The following list is by no means complete and will merely serve as examples of additional combinations of affinity ligands and their receptors.

o Antibody / antigen (haptens)
  e,g. anti-DNP antibodies / targeting molecules conjugated with DNP.

o Lectins / saccharide residues

e.g. lectin from Sambueus nigra / beta-D-gal(1-4)-D-glc

o Enzyme / enzyme inhibitors

e.g. D-Alanin carboxypeptidase from B.subtilis or E.coli / 6-aminopenicillanic acid or p-aminobenzylpenicillin.

e.g. Dehydrofolate reductase / aminopterin or amethopterin

o Protein / co-factors.

e.g. Intrinsic factor / vitamin B12 or cobalamin.

The adsorbent device to which the receptor is immobilized may be of various shape and chemical composition. It may for example constitute a column house filled with particulate polymers, the latter of natural origin or artificially made. The particles may be macroporous or their surface may be grafted, the latter in order to enlarge the surface area. The particles may be spherical or granulated and be based on polysaccharides, ceramic material, glass, silica,plastic, or any combination of these or alike material. A combination of these could for example be solid particles coated with a suitable polymer of natural origin or artificially made. Artificial membranes may also be used. These may be flat sheet membranes made of cellulose, polyamide , polysulfone , polypropen or other types of material which are sufficiently inert, biocompatible, non-toxic and to which the receptor could be immobilized either directly or after chemical modification of the membrane surface.Capillary membranes like the hollow fibers made from cellulose, polypropen or other materials suitable for this type of membranes may also be used.

The principle out-line of a system for processing of human plasma with the aim of removing exogenous targeting molecules in accordance with the invention is described in Fig.1. Blood is drawn from the patient through a peristaltic pump (1) at a flow of typically 20-50 ml per min. The blood is separated into plasma and blood cells in a standard blood separation device (2), either through centrifugation or by the use of a plasma filter. Heparin and/or citrate may be added to the blood prior to the plasma separation in order to prevent blood coagulation and reduce complement activation.

Prior to entering the adsorbent device, the plasma flow will be monitored with respect to pressure and air bubbles. The latter will be removed in a standard air-trap. An optional safety filter device (6) may be used to remove any debris or particles coming out from the adsorbent device. The plasma will finally mix with the patients own blood-cells and the blood will pass a second air-trap (4) and the pressure will be monitored before the blood is returned to the patient. A similar extracorporeal plasma adsorption system for removal of immune complexes has been described (Wallmark,A et al., Artificial Organ 8, 1984, 72).
The procedure is greatly simplified if whole blood rather than plasma is processed. The princple out-line of such a system is shown in Fig 2. Removal of specific antibodies in a continous extracorporeal whole blood system has previously been described (Nilsson , I. M et al., Plasma Ther. Transfus. Technol. 5, 1984, 127).

The following experiments are far from optimized, and should merely serve as an illustation of the use of the invention, and are not limitative of the remainder of the disclosure in any way whatsoever.

EXPERIMENTAL

Material and Methods

1. The animal model.

Nude rats with thymic aplasia has become generally accepted for testing of monoclonal antibodies for immunoscintigraphy and immunotherapy. With the possibility of implanting human tumour material in these rats, experimental animals are obtained which express human tumour antigens, in a defined place. We utilized nude rats (Rowett RNu/RNu strain) transplanted with tumour cells obtained from a tumour biopsy from a patient with melanoma metastases. The monoclonal antibody was the 96.5 (mouse IgG2a) specific for p97, a cell surface glycoprotein with the molecular weight of 97 000 present on 60 - 80 % of human

melanoma. The tumour model has been described in detail (Ingvar,C.et al., Nucl. Med 30, 1989, 1224).

2. Conjugation and labelling of monoclonal antibodies.

The monoclonal antibody 96.5 (330 ug) was labelled with 37 MBq iodine-125 (^{125}I), using the Chloramine-T method. By elution on a Sephadex G25 column (Pharmacia PD10) the fraction containing the labelled protein was collected and used for the conjugation. The labelling efficiency of the ^{125}I 96.5 was around 70 %. The radiolabelled monoclonal antibody was conjugated with biotin by mixing 500 ug of antibody with 41 ug of N-Hydroxysuccinimido-biotin (NHS-biotin) in 0.1M $NaHCO_3$, 0.15M NaCl with 10% DMSO. The mixture was incubated for 1 h at room temperature, followed by overnight incubation at 4 C. The ^{125}I-McAb-biotin conjugate was separated from free biotin-reagent by gelfiltration on a Sephadex G25 column, equilibrated with PBS (10 mM Sodium phosphate, 0.15 M NaCl, pH 7.3). The conjugate was stored at 4 C until used.

3. Radioimmunoscintigraphy with extracorporeal immunoadsorption of plasma.

Nude rats (Rowett RNu/RNu strain), 2-3 months of age, with a weight of 210±25 g were used. The rats were transplanted with tumour cells, established from a human melanoma metastase, on each thigh: intramuscularly (left) and subcutaneously (right). The immuno-conjugate was injected 1-2 weeks after tumour inoculation when the tumour was just palpable. Four to seven days before injection of immunoconjugate, the rats to be treated with extracorporeal immunoadsorption have been catetherized using the carotid and the jugular blood vessels. 24 hours after injection of 50 ug conjugate (3 MBq), the rats were treated with extracorporeal immunoadsorption. Blood was pumped continuously through a hollow-fiber plasmafilter at a rate of 1.5 ml/min and plasma was separated and passed through an adsorbent column at a flow rate of 0.2 ml/min. The column contained 1.2 ml of avidin-sepharose, highly specific for adsorption of the biotin-conjugate. Approximately three plasma volumes were treated during a 3 h period. The animals were imaged with a scintillation camera (General Electric T400) before, and directly after the extracorporeal treatment. The rats were killed with an overdose of ether and various organs (see table 1 for list of organs) were removed. Each tissue sample was weighed and measured in an automatic NaI(Tl)

gamma counter for radioactivity content. The specific tissue uptake was expressed as % of injected dose per gram of tissue (%/g) and as an uptake ratio (%/g tumour)/(%/g tissue). Control rats were neither catetherized nor treated with extracorporeal immunoadsorption.

Results

During extracorporeal immunoadsorption of these rats, 90-95 % of the radioactivity in the blood were removed, corresponding to about 40-50 % of the total activity in the animals. The immunoscintigrams are presented in figure 3, and the results from the measurements of tissue specific activities in table 1. These results are well in agreement with theoretical evaluations based on simulated extracorporeal immunoadsorption using a computerized mathematical model (Norrgren K. et al., Antibody Immunoconjugates, and Radiopharmaceuticals, in press; copy enclosed).

3. Radioimmunoscintigraphy with extracorporeal immunoadsorption of whole blood.

Euthymic rats (Wistar/Furth strain), 2-3 months of age, with a weight of 210±25 g were used. Four to seven days before injection of immunoconjugate, the rats were catetherized using the carotid and the jugular blood vessels. 24 hours after injection of 50 ug conjugate (5 MBq), the rats were subjected to extracorporeal immunoadsorption. Blood was pumped continuously through an adsorbent column at a flow rate of 0.2 ml/min. The column (1.5 ml) contained avidin covalently linked to Sepharose 6 MB macrobeads. The macrobeads allow direct adsorption of whole blood. Approximately three blood volumes were treated during a 3 h period. The animals were analyzed with a scintillation camera (General Electric T400) before, and directly after the extracorporeal treatment. The rats were killed with an overdose of ether and various organs (see table 2 for list of organs) were removed. Each tissue sample was weighed and measured in an automatic NaI(Tl) gamma counter for radioactivity content. The specific tissue uptake was expressed as % of injected dose per gram of tissue (%/g). Control rats were neither catetherized nor treated with extracorporeal immunoadsorption.

Results

During extracorporeal immunoadsorption of the rats, 90-95 % of the radioactivity in the blood were removed, corresponding to about 40-50 % of the total body activity. The immuno-

scintigrams are presented in figure 3, and the results from the measurements of tissue activities in table 2. The extracorporeal immunoadsorption of whole blood was of the same efficiency as immunoadsorption of plasma, but is technically easier to perform.

The invention is of course not restricted to just only the above described examples, but may be varied within the scope of the following claims. The specific molecules may for instance be removed by other means than adsorption. Alternative methods may be filtration and/or centrifugation.

Table 1. Tissue uptake and binding ratio with and without extracorporeal immunoadsorption.

	Control Rats		Rats treated with ECIA			
Tissue	%/gram	ratio	%/gram	ratio	%depletion	improvement
Tumour	0.48 +/-0.03	1.00	0.24 +/-0.11	1.00	50.1	1.00
plasma	2.23 +/-0.37	0.22 +/-0.06	0.15 +/-0.03	1.34 +/-0.64	93.1	5.99
Lymph nodes	0.38 +/-0.07	1.30 +/-0.32	0.18 +/-0.08	1.29 +/-0.27	51.9	0.99
muscules	0.17 +/-0.09	3.35 +/-1.45	0.10 +/-0.02	2.50 +/-0.89	43.7	0.75
kidney	0.35 +/-0.05	1.39 +/-0.25	0.07 +/-0.02	3.86 +/-2.21	80.8	2.78
liver	0.32 +/-0.05	1.52 +/-0.19	0.05 +/-0.02	5.24 +/-3.69	83.9	3.45
spleen	0.23 +/-0.03	2.17 +/-0.33	0.04 +/-0.006	6.95 +/-4.35	83.5	3.20
heart	0.22 +/-0.08	2.45 +/-1.03	0.07 +/-0.01	3.37 +/-1.34	67.9	1.37
lung	0.52 +/-0.07	0.95 +/-0.15	0.14 +/-0.07	1.70 +/-0.43	72.1	1.80
bone marrow	0.34 +/-0.05	1.44 +/-0.24	0.05 +/-0.01	5.47 +/-3.02	86.4	3.79
stomach	0.22 +/-0.003	2.05 +/-0.08	0.17 +/-0.09	1.62 +/-1.52	24.3	0.79

%/gram: % of the total body activity measured per gram of the respective tissue. (mean +/- S.D.)

Ratio: (%/gram tumour)/(%/gram normal tissue) (mean+/- S.D.)

ECIA : extracorporeal immunoadsorption.

% depletion : 100*((%/gram without ECIA- %/gram with ECIA)/(%/gram without ECIA))

Improvement : ratio with ECIA/ratio without ECIA.

Table 2. Tissue uptake and binding ratio with and without extracorporeal immunoadsorption of whole blood.

Tissue	Control Rats %/gram	Rats treated with ECIA %/gram	% depletion
plasma	3.22	0.35	89.1
lymph nodes	0.31	0.25	19.4
muscules	0.11	0.08	27.3
kidney	0.56	0.11	80.4
liver	0.42	0.10	76.2
spleen	0.24	0.09	62.5
heart	0.35	0.13	62.8
lung	0.60	0.24	60.0
bone marrow	0.45	0.13	71.1

%/gram: % of the total body activity measured per gram of the respective tissue. (mean)

ECIA : extracorporeal immunoadsorption of whole blood.

% depletion : 100*((%/gram without ECIA- %/gram with ECIA)/(%/gram without ECIA))

CLAIMS

1. A method for reducing levels of non-tissue-bound targeting molecules, selective for certain tissues or cells, wherein the said method is intended for diagnostic and/or therapeutic applications to vertebrate hosts, and wherein said targeting molecules are administered to a vertebrate host and kept therein for a certain time in order to be concentrated to the target tissues or cells by being attached thereto, **characterized** in that the targeting molecules which are not attached to the target tissues or cells are removed from the blood circulation system or at least reduced to a lower concentration by passing the blood through an extracorporeal device, which selects and retains the targeting molecules.

2. A method according to claim 1, **characterized** in that the removal of the said non-tissue-bound targeting molecules is effected by passing the blood or plasma through an adsorption device, containing immobilized agents which selectively bind the said targeting molecule.

3. A method according to claim 1 or 2, **characterized** in that the said immobilized agent, which may constitute an immobilized receptor, binds to a part of the targeting molecules which does not constitute the target specificity of the said targeting molecule and which has been artificially induced into the targeting molecule by gene technology, such as mutation, hybridization or by other fusion techniques.

4. A method according to claim 2 or 3, **characterized** in that an affinity ligand, being specific to the said immobilized receptor, is attached to the said targeting molecule.

5. A method according to claim 4, **characterized** in that the said affinity ligand is covalently linked to the said targeting molecule.

6. A method according to claim 4 or 5, **characterized** in that the affinity ligand is biotin or derivatives thereof and that the immobilized receptor is avidin, including fragments or derivatives thereof, or alike biotin binding receptors.

7. A method according to claim 6, **characterized** in that the immobilized receptor is streptavidin, or derivatives or fragments thereof.

8. A method according to any of the claims 1-7, **characterized** in that an imaging agent is conjugated to the targeting molecule and that the system is intended for in vivo diagnosis of vertebrates.

9. A method according to claim 8, **characterized** in that the system is intended for in vivo diagnosis of tumours.

10. A method according to claim 8 or 9, **characterized** in that the said imaging agent is a radioisotope.

11. A method according to the claims 8-10, **characterized** in that the said imaging agent is Iodine-125.

12. A method according to any of the claims 1-7, **characterized** in that the said targeting molecule in itself possesses a tumour killing or tumour regressive effect, or is converted to possess any of these effects.

13. A method according to claim 12, **characterized** in that the said tumour killing or tumour regressive effect is exerted by an agent conjugated to the targeting molecule.

14. A method according to claim 13, **characterized** in that the said conjugated agent is a cytotoxic drug, radioisotope or an activator of pro-drugs or a combination of these.

15. A method according to claim 14, **characterized** in that the said activators of the pro-drugs are enzymes.

16. A method according to claims 3 and 4, **characterized** in that the immobilized receptor is an enzyme inhibitor or substrate having high affinty to an enzyme conjugated to the targeting molecule, and where such enzyme is capable of converting pro-drugs to active drugs such as those possessing tumour killing or tumour regressive effects.

17. A method according to any of the claims 1-16, **characterized** in that the targeting molecule is an antibody, or fragments thereof, and including genetically engineered hybrids or chemically synthesized peptides based on the specificity of the antigen-binding region of one or several target specific monoclonal antibodies e.g. chimeric antibodies, single chain antibodies or alike antibody derivitives.

18. A method according to claim 4, **characterized** in that said receptor specificity and affinity ligand are provided by any of the following combinations:

a) antibody/antigen (haptens)
e g anti-DNP antibodies/targeting molecules conjugated with DNP,

b) lectins/saccharide residues

e g lectin from Sambueus nigra/beta-D-gal(1-4)-D-glc,

c) enzyme/enzyme inhibitors

e g D-Alanin carboxypeptidase from B.subtilis or E.coli/
6-aminopenicillanic acid or p-aminobeynzylpenicillin,

e g Dehydrofolate reductase/aminopterin or amethospterin,

d) protein/co-factors

e g Intrinsic factor/vitamin B12 or cobalamin.

19. A system for reducing levels of non-tissue-bound targeting molecules, selective for certain tissues or cells, intended for diagnostic and/or therapeutic applications to vertebrate hosts, including means for adding said targeting molecules to the blood circulation system for keeping them therein for a certain time in order to be concentrated at the target by being attached thereto, **characterized** by means for extracorporeal circulation of blood through an extracorporeal device, having means for removing the targeting molecules which are not attached to the target from the blood or at least reducing the concentration of said targeting molecules in the blood passing said extracorporeal device, and by means for the return of the blood to the patient from the extracorporeal circulation.

20. A system according to claim 19, **characterized** in that said extracorporeal device includes an adsorption device having immobilized thereto specific receptors towards the said targeting molecule.

21. A system according to claim 19 or 20, wherein an affinity ligand, being specific to the said immobilized receptor, is attached to the said targeting molecule, **characterized** in that the affinity ligand is biotin or derivatives thereof and that the immobilized receptor is avidin or alike biotin binding receptors.

22. The use of targeting molecules, selective for certain tissues or cells,in connection with the reduction of non-tissue-bound targeting molecules in diagnostic and/or therapeutic application, wherein said targeting molecules are added to the blood circulation system and kept therein for a certain time in order to be concentrated at the target by being attached thereto, **characterized** in that said molecules have an artificially induced specific affinity, or are pre-labelled with a specific affinity ligand, which render high affinity of the

targeting molecules to a corresponding receptor immobilized to an extracorporeal device through which the blood is fed for removing the targeting molecules which are not attached to the target or at least reducing said molecules to a lower concentration.

23. The use according to claim 22, **characterized** in that the affinity ligand is covalently linked to the said targeting molecule.

24. The use according to claim 22 or 23, **characterized** in that the affinity ligand is biotin or derivatives thereof.

25. The use according to any of the claims 22-24, **characterized** in that an imaging agent is conjugated to the targeting molecules which are intended to be utilized for in vivo diagnosis of vertebrates.

26. The use according to claim 25, **characterized** in that the conjugated targeting molecules are intended for in vivo diagnosis of tumours.

27. The use according to claim 25 or 26, **characterized** in that the said imaging agent is a radioisotope.

28. The use according to the claims 25-27, **characterized** in that the said imaging agent is Iodine-125.

29. The use according to any of the claims 22-24, **characterized** in that the said targeting molecule in itself possesses a tumour killing or tumour regressive effect, or is converted to possess any of these effects.

30. The use according to claim 29, **characterized** in that the said tumour killing or tumour regressive effect is exerted by an agent conjugated to the targeting molecule.

31. The use according to claim 30, **characterized** in that the said conjugated agent is a cytotoxic drug, radioisotope or an activator of pro-drugs or a combination of these.

32. The use according to claim 31, **characterized** in that the said activators of the pro-drugs are enzymes.

33. The use according to any of the claims 22-32, **characterized** in that the targeting molecule is an antibody, or fragments thereof, and including genetically engineered hybrids or chemically synthesized peptides based on the specificity of the antigen-binding region of one or several target specific monoclonal antibodies e.g. chimeric antibodies, single chain antibodies or alike antibody derivitives.

34. The use according to claims 22-23 or 25-33, **characterized** in that said immobilized receptors and affinity ligand are provided by any of the following combinations:

a) antibody/antigen (haptens)

e g anti-DNP antibodies/targeting molecules conjugated with DNP,

b) lectins/saccharide residues

e g lectin from Sambueus nigra/beta-D-gal(1-4)-D-glc,

c) enzyme/enzyme inhibitors

e g D-Alanin carboxypeptidase from B.subtilis or E.coli/

6-aminopenicillanic acid or p-aminobeynzylpenicillin,

e g Dehydrofolate reductase/aminopterin or amethospterin,

d) protein/co-factors

e g Intrinsic factor/vitamin B12 or cobalamin.

FIG 1

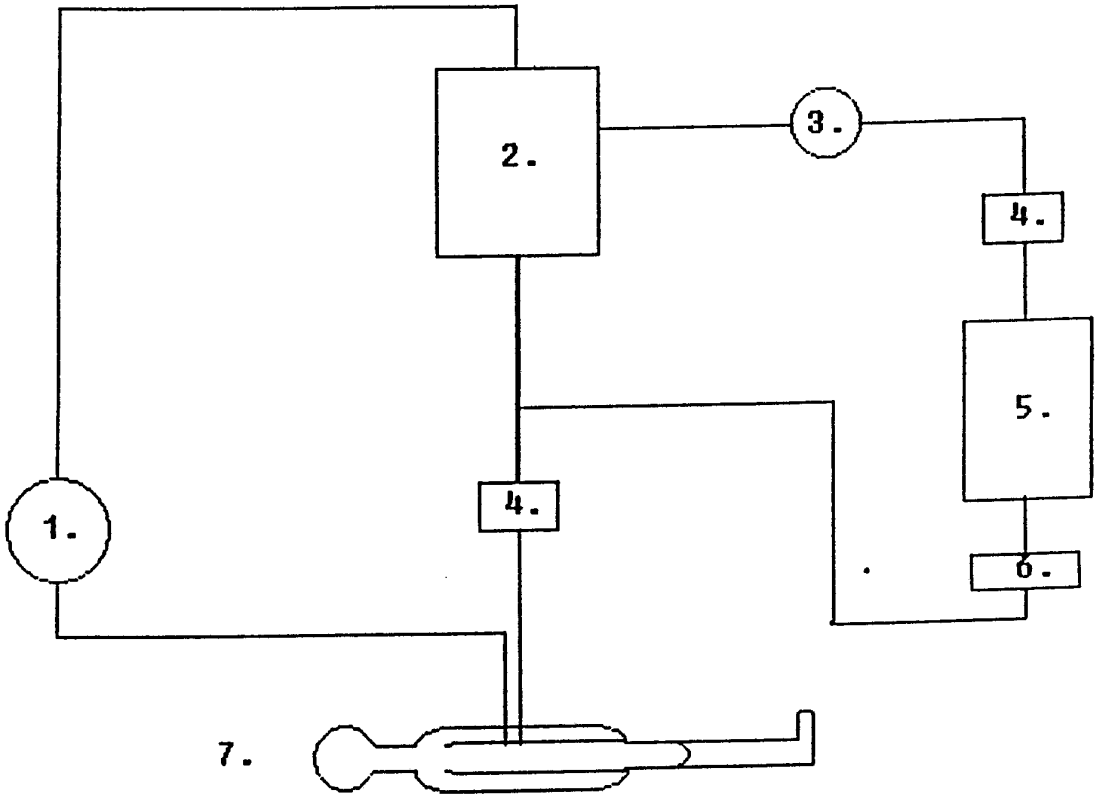

FIG 2

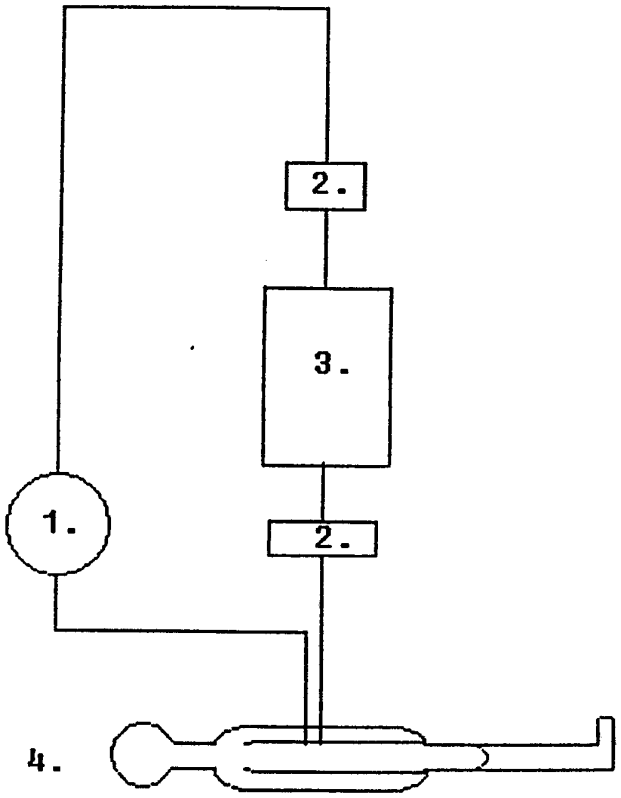

FIG 3A

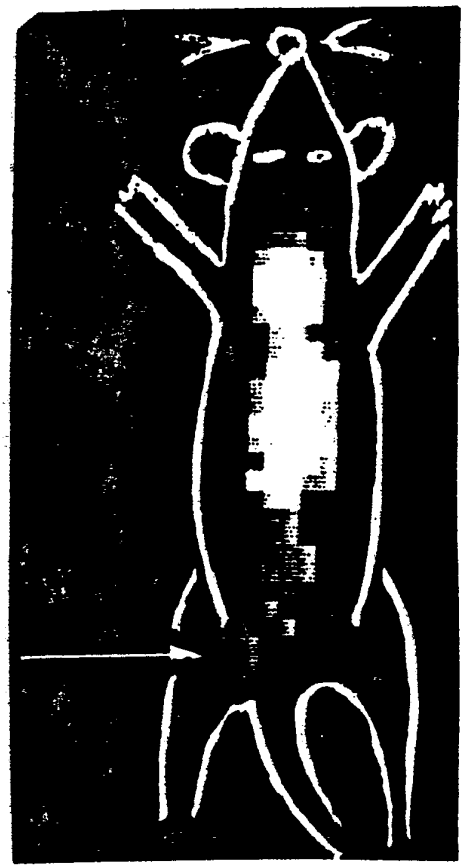

FIG 3B

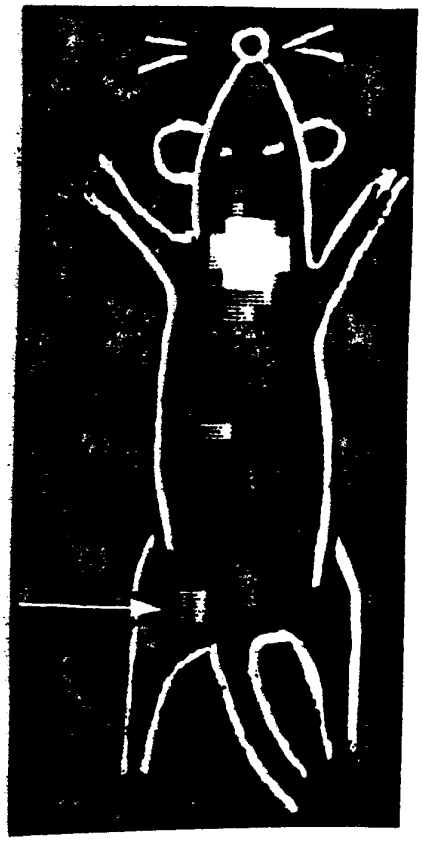

INTERNATIONAL SEARCH REPORT

International Application No PCT/SE 92/00020

I. CLASSIFICATION OF SUBJECT MATTER (if several classification symbols apply, indicate all)[6]

According to International Patent Classification (IPC) or to both National Classification and IPC

IPC5: A 61 K 39/00, 43/00, 49/02, A 61 M 1/36

II. FIELDS SEARCHED

Minimum Documentation Searched[7]

Classification System	Classification Symbols
IPC5	A 61 K; A 61 M

Documentation Searched other than Minimum Documentation to the Extent that such Documents are Included in Fields Searched[8]

SE,DK,FI,NO classes as above

III. DOCUMENTS CONSIDERED TO BE RELEVANT[9]

Category *	Citation of Document,[11] with indication, where appropriate, of the relevant passages[12]	Relevant to Claim No.[13]
X	WO, A2, 8806045 (BISSENDORF PEPTIDE GMBH) 25 August 1988, see the whole document	1
Y		2,4,5,8-20
	--	
X	WO, A1, 9007929 (AKZO N.V. ET AL) 26 July 1990, see page 3, line 25 - line 29; claim 30	1,2,4,5, 12-15, 18,19, 20
Y		14-16
	--	
Y	Faseb Journal, Vol. 4, No. 2, 1990 PETER D. SENTER: "Activation of prodrugs by antibody-enzyme conjugates: a new approach to cancer therapy", see page 188 - page 193	14-16
	--	

* Special categories of cited documents:[10]

"A" document defining the general state of the art which is not considered to be of particular relevance

"E" earlier document but published on or after the international filing date

"L" document which may throw doubts on priority claim(s) or which is cited to establish the publication date of another citation or other special reason (as specified)

"O" document referring to an oral disclosure, use, exhibition or other means

"P" document published prior to the international filing date but later than the priority date claimed

"T" later document published after the international filing date or priority date and not in conflict with the application but cited to understand the principle or theory underlying the invention

"X" document of particular relevance, the claimed invention cannot be considered novel or cannot be considered to involve an inventive step

"Y" document of particular relevance, the claimed invention cannot be considered to involve an inventive step when the document is combined with one or more other such documents, such combination being obvious to a person skilled in the art.

"&" document member of the same patent family

IV. CERTIFICATION

Date of the Actual Completion of the International Search	Date of Mailing of this International Search Report
7th May 1992	1992 -05- 07
International Searching Authority	**Signature of Authorized Officer**
SWEDISH PATENT OFFICE	Carl Olof Gustafsson

Form PCT/ISA/210 (second sheet) (January 1985)

III. DOCUMENTS CONSIDERED TO BE RELEVANT (CONTINUED FROM THE SECOND SHEET)

Category *	Citation of Document, with indication, where appropriate, of the relevant passages	Relevant to Claim No
P,X	WO, A1, 9101749 (COBE LABORATORIES, INC.) 21 February 1991, see the whole document -- --------	1,2,4,5, 8-14

FURTHER INFORMATION CONTINUED FROM THE SECOND SHEET

V. [x] OBSERVATIONS WHERE CERTAIN CLAIMS WERE FOUND UNSEARCHABLE [1]

This international search report has not been established in respect of certain claims under Article 17(2) (a) for the following reasons:

1. [ ] Claim numbers 22-34 because they relate to subject matter not required to be searched by this Authority, namely:

See PCT Rule 39.1(iv): Methods for treatment of the human or animal body by surgery or therapy, as well as diagnostic methods.

2. [ ] Claim numbers....., because they relate to parts of the international application that do not comply with the prescribed requirements to such an extent that no meaningful international search can be carried out, specifically:

3. [ ] Claim numbers....., because they are dependent claims and are not drafted in accordance with the second and third sentences of PCT Rule 6.4(a).

VI. [ ] OBSERVATIONS WHERE UNITY OF INVENTION IS LACKING [2]

This International Searching Authority found multiple inventions in this international application as follows:

1. [ ] As all required additional search fees were timely paid by the applicant, this international search report covers all searchable claims of the international application.

2. [ ] As only some of the required additional search fees were timely paid by the applicant, this international search report covers only those claims of the international application for which fees were paid, specifically claims:

3. [ ] No required additional search fees were timely paid by the applicant. Consequently, this international search report is restricted to the invention first mentioned in the the claims. It is covered by claim numbers:

4. [ ] As all searchable claims could be searched without effort justifying an additional fee, the International Searching Authority did not invite payment of any additonal fee.

Remark on Protest

[ ] The additional search fees were accompanied by applicant's protest.

[ ] No protest accompanied the payment of additional seach fees.

ANNEX TO THE INTERNATIONAL SEARCH REPORT ON INTERNATIONAL PATENT APPLICATION NO.PCT/SE 92/00020

This annex lists the patent family members relating to the patent documents cited in the above-mentioned international search report.
The members are as contained in the Swedish Patent Office EDP file on 28/03/92
The Swedish Patent Office is in no way liable for these particulars which are merely given for the purpose of information.

Patent document cited in search report	Publication date	Patent family member(s)		Publication date
WO-A2- 8806045	88-08-25	DE-A-C-	3705637	88-09-29
		DE-A-	3864020	91-09-05
		EP-A-B-	0344201	89-12-06
		JP-T-	3501333	91-03-28
		US-A-	4820261	89-04-11
WO-A1- 9007929	90-07-26	AU-D-	5039790	90-08-13
		CA-A-	2025899	90-07-24
		EP-A-	0454783	91-11-06
WO-A1- 9101749	91-02-21	AU-D-	6426890	91-03-11
		EP-A-	0436717	91-07-17