No. 687,225. Patented Nov. 26, 1901.

W. GORDON & H. W. GOULD.

HEEL BEADING MACHINE.

(Application filed July 25, 1900.)

(No Model.) 2 Sheets—Sheet 1.

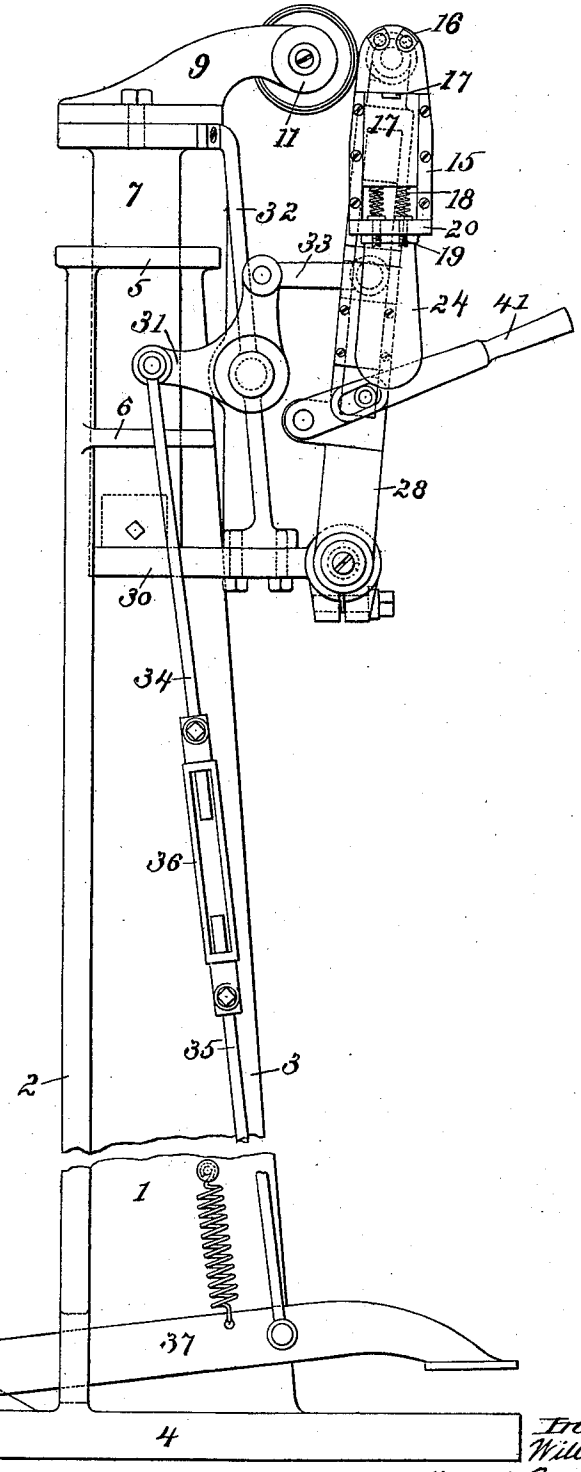

Witnesses:
Edward S. Day.
Horace Van Everen.

Fig. 1.

Inventors.
William Gordon &
Howard W. Gould
by their Attorney
Benjamin Phillips

THE NORRIS PETERS CO., PHOTO-LITHO., WASHINGTON, D. C.

No. 687,225. Patented Nov. 26, 1901.

W. GORDON & H. W. GOULD.

HEEL BEADING MACHINE.

(Application filed July 25, 1900.)

(No Model.) 2 Sheets—Sheet 2.

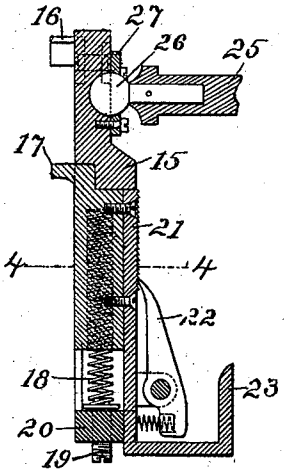

Fig. 3.

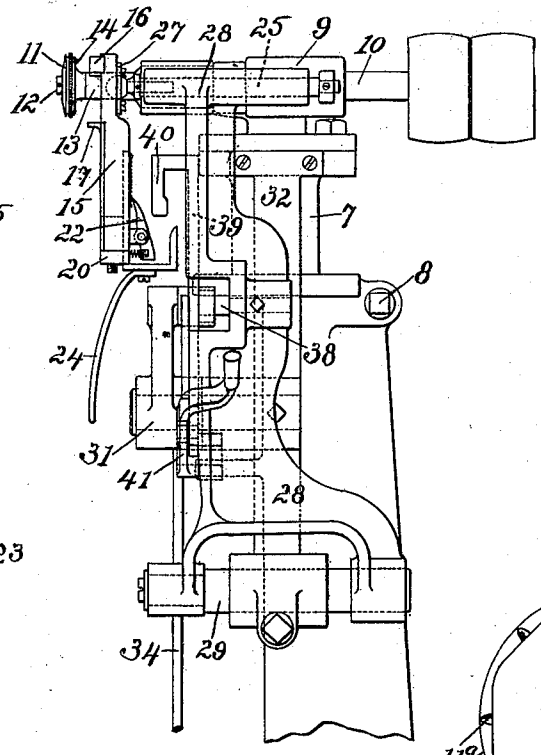

Fig. 2.

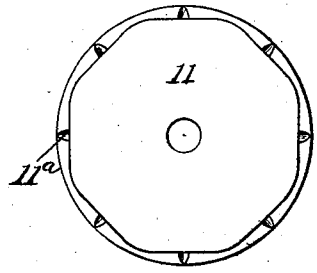

Fig. 6.

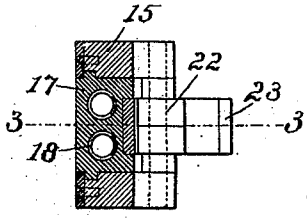

Fig. 4.

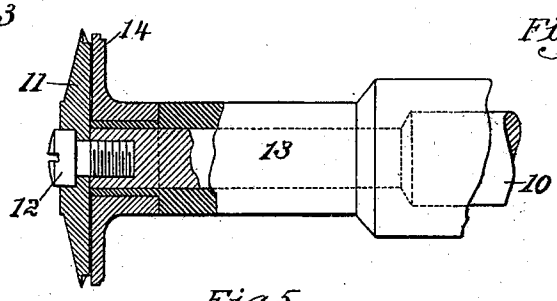

Fig. 5.

Witnesses:
Edward S. Day.
Horace Van Everen.

Inventors,
William Gordon &
Howard W. Gould
by their attorney
Benjamin Phillips

THE NORRIS PETERS CO., PHOTO-LITHO., WASHINGTON, D. C.

UNITED STATES PATENT OFFICE.

WILLIAM GORDON AND HOWARD W. GOULD, OF BOSTON, MASSACHUSETTS, ASSIGNORS TO UNITED SHOE MACHINERY COMPANY, OF PATERSON, NEW JERSEY, A CORPORATION OF NEW JERSEY.

HEEL-BEADING MACHINE.

SPECIFICATION forming part of Letters Patent No. 687,225, dated November 26, 1901.

Application filed July 25, 1900. Serial No. 24,755. (No model.)

To all whom it may concern:

Be it known that we, WILLIAM GORDON and HOWARD W. GOULD, citizens of the United States, residing at Boston, in the county of Suffolk and State of Massachusetts, have invented certain new and useful Improvements in Heel-Beading Machines; and we do hereby declare the following to be a full, clear, and exact description of the invention, such as will enable others skilled in the art to which it appertains to make and use the same.

This invention relates to heel-beading machines which are used in the manufacture of boots and shoes for imparting a finished appearance to the edge of the heel next to the upper. Such machines usually comprise an edge hammering or ironing tool termed the "beading-tool" and an indenting-tool for forming a line of indentations below the edge acted on by the beading-tool. In all heel-beading machines which have heretofore been devised, so far as we are aware of the state of the art, the shoe has been held and pressed against the beading-tool by the operator. The results so obtained have been unsatisfactory, as the operator often fails or is unable to press the shoe against the tool with sufficient force to produce a clear and distinct line of indentations or to properly iron the heel edge. Moreover, as in such machines the shoe must be held against the beading-tool by main strength the work of the operator is very laborious and the machine is necessarily slow in operation.

The object of our invention is to provide a machine of the class referred to with means for supporting the work and presenting it to the action of the beading-tool, whereby the machine is made capable of producing satisfactory work, the labor of the operater is reduced, and the speed at which the machine can be operated is increased.

A further object of our invention is to provide an improved form of beading-tool.

With these objects in view our invention consists in the devices and combinations of devices hereinafter described and claimed.

In the accompanying drawings, in which is illustrated a preferred form of our invention, Figure 1 is a view in side elevation of a machine embodying the same. Fig. 2 is a view in front elevation of the mechanism shown in the upper part of Fig. 1. Fig. 3 is a detail sectional view on the line 3 3 of Fig. 4, showing the work-support and a heel-clamping mechanism carried thereby. Fig. 4 is a detail sectional view on the line 4 4, Fig. 3. Fig. 5 is a detail view, partly in section, of the beading and indenting tools; and Fig. 6 is a face view of the beading-tool detached.

Referring to the drawings, in which like characters of reference indicate like parts, 1 represents the frame of the machine, of any suitable construction, herein shown as consisting of two vertical webs 2 and 3 at right angles to each other supported on a base 4 and connected at their upper ends by transverse webs 5 and 6. Supported in the frame 1 and adjustable vertically therein is a standard 7, passing through openings in the webs 5 and 6 and held in position by the clamping-screw 8. (See Fig. 2.) A bracket 9, bolted to the upper end of the standard, is provided with bearings for the shaft 10, carrying at one end fast and loose pulleys and at the other end the tool 11, secured thereto by a screw 12. The bearing for the end of the shaft to which the tool 11 is secured is formed by a removable bushing 13, and the outer end of this bushing is reduced in diameter to form a bearing for the indenting-tool 14.

The tools 11 and 14 are substantially the same as those disclosed in the patent to Joshua H. Ryder, No. 388,790, dated August 28, 1888, except that the inner surface of the guiding-flange of the tool 11 is provided with notches 11^a, as shown in Fig. 6. These notches interrupt the smooth surface of the flange and cause such flange to act on the upper surface of the heel in the manner that the cam-surfaces act on the outer surface of the heel—that is, the edges of the notches act to deliver a series of blows upon the upper surface of the heel, and thus hammer and iron down such surface and give it a smooth finished appearance. The notches 11^a do not extend completely through the flange of the tool, but form grooves on its inner surface. These grooves collect the dressing removed from the outer surface of the heel in sufficient

quantity to apply the same to the upper surface of the heel, which is thus polished in the same manner as the outer surface.

As a means for supporting the shoe and presenting it to the beading-tool we provide a support, upon which the shoe is securely held, movable toward and from the beading-tool to bring the heel of the shoe into contact with the tool and also movable while the heel is in contact with the tool to cause the tool to travel around the upper edge of the heel. We also preferably so mount the support as to be capable of a lateral movement with relation to the beading-tool to bring the upper edge of the heel into alinement with the tool, and thus capacitate the machine for operation upon different styles of shoes. We also preferably mount the support so that it is capable of an oscillating or tilting movement in addition to the movements above referred to, whereby the upper edge of the heel may be kept in alinement with the beading-tool throughout the travel of the tool about the heel and the surface of the heel kept parallel with the surface of the tool. In the mechanism illustrated in the drawings for accomplishing the above results 15 represents the shoe-support, consisting of a block provided with the stationary clamping-jaws 16 and movable clamping-jaw 17, the jaws being arranged to clamp and securely hold the heel of a shoe by engaging the edge thereof, the jaws 16 engaging the back and the movable jaw 17 the breast of the heel. The movable jaw 17 slides in suitable guideways in the block 15 and is pressed upwardly by the coiled springs 18, seated in holes bored in the body portion of the jaw and resting on adjusting-screws 19, passing upwardly through a cross-bar 20, forming the lower end of the block 15. Rigidly secured to the back of the sliding jaw 17 is a toothed bar 21, with which locking-pawls 22, carried by the block 15, are adapted to engage to lock the jaw 17 from movement after it has been moved by the springs 18 to engage the heel of a shoe. The lower end of the bar 21 is turned outwardly and then upwardly to form an engaging projection 23, the function of which will be hereinafter described. A plate 24, secured to the horizontal portion of the bar 21 and extending downwardly therefrom, serves as a support for the fore part of the shoe. The block 15 is supported at the end of a rod 25 by means of a ball-and-socket joint formed by a ball 26 at the end of the rod engaging a hemispherical socket in the block 15 and held therein by means of the plate 27. The rod 25 constitutes a laterally-movable carrier for the shoe-support and is mounted to slide freely in a horizontal bearing in the upper end of a frame 28, pivoted on a shaft 29, securely clamped in an arm 30, extending from the lower end of the standard 7. The lower end of the frame 28 is forked to form a bearing at each side of the clamp for the shaft 29. By loosening the clamp the shaft 29 and frame 28 can be adjusted laterally. As a means for swinging the frame 28 to move the shoe-support toward the beading-tool we provide a bell-crank lever 31, pivoted on a bracket 32, secured to the arm 30 and to the upper end of the standard 7 and connect one arm of the bell-crank to the frame 28 by means of a link 33 and the other arm to a treadle 37 by means of rods 34 35 and adjusting-link 36. The link 33 is loosely pivoted on a pin 38, secured to the frame 28, and moves when the frame is adjusted laterally.

As a means for releasing the locking-pawls 22 from the teeth of the bar 21 and for depressing the clamping-jaw 17 against the tension of the springs 18 we provide a slide 39, reciprocating in suitable guideways in the frame 28, provided at its upper end with an outwardly and downwardly extending portion forming an engaging projection 40, which as the slide 39 is moved downwardly engages the pawls 22 and lifts them from the teeth of the bar 21 and thereafter engages the horizontal portion of the bar 21 and depresses the jaw 17. A hand-lever 41, pivoted to the frame 28 and having a pin-and-slot connection with the slide 39, serves as a means for actuating the slide.

The operation of the machine above described is as follows: The parts being in the position shown in the drawings the operator presses down on the lever 41 to impart a downward movement to the projection 40. The projection 40 by striking the pawls 22 or the projection 23 of the bar 21 moves the shoe-support to the left (or right as viewed in Fig. 2) to bring the lower ends of the pawls into position to be struck thereby, and in its continued downward movement the projection 40 passes between the projection 23 and pawls 22 and lifts the pawls from the teeth of the bar 21 and thereafter by contacting with the horizontal portion of the bar 21 depresses the clamping-jaw 17 against the tension of the springs 18. The operator now places a shoe upon the support 15 with the heel in position to be clamped by the jaws 16 and 17 and the toe portion supported by the plate 24 and moves the lever 41 to raise the slide 39 and projection 40. As the projection 40 rises the clamp 17 is raised by the springs 18 and pressed against the breast of the heel, and thereafter as the projection 40 continues to rise the pawls 22 are released and engage the teeth of the bar 21 to lock the jaw 17 in position. The shoe-support is now moved laterally, the bar 25 sliding in the frame 28, to bring the crease between the upper and the heel in line with the guiding-flange of the tool 11, and by pressing on the treadle 37 the frame 28 is swung, through the connections hereinbefore described, to bring the heel of the shoe into contact with the tool. While the shoe is thus pressed against the tool the support 15 is rotated about its pivot to cause the tool to travel around the heel. The universal joint allows the support to be tilted or

swung in any direction, and thus the operator is enabled to manipulate the support to keep the upper edge of the heel in alinement with the tool at all times and the surface of the heel parallel with the surface of the tool.

When necessary, the frame 28 can be adjusted laterally to adapt the machine for different styles and sizes of shoes. The manner in which the shoe-support is mounted, however, adapts the machine for operation upon shoes of widely-varying styles and sizes without such adjustment. The beading-tool and the work-support are supported from the adjustable standard 7, as has been described, whereby the parts may be adjusted to suit the height of the operator.

While in the above description we have referred to the tool 11 as a "beading-tool" and to the tool 14 as an "indenting-tool," it is to be understood that both of these tools are concerned in the beading operation and that either might be termed a "beading-tool." It is also to be understood that our invention is not limited to any particular form of beading tool or tools and that where we use the term "beading-tool" in the claims we intend to cover any tool or tools for performing the functions of either or both of the tools 11 and 14 or any tool for imparting a finished appearance to the upper edge of a shoe-heel.

The construction illustrated and described embodies our invention in its preferred form; but it is to be understood that our invention is not limited thereto, but may be embodied in many different constructions without departing from the spirit thereof.

Having thus described our invention, we claim as new and desire to secure by Letters Patent—

1. A heel-beading machine, having, in combination, a beading-tool and a shoe-support relatively movable to bring the tool into engagement with the heel of a shoe and to cause the tool to travel around the heel, the tool and shoe support being also relatively movable to maintain the surfaces of the heel and tool parallel, substantially as described.

2. A heel-beading machine, having, in combination, a beading-tool and a shoe-support relatively movable longitudinally of the axis of the tool during the operation of the machine, said shoe-support being movable to present the heel of the shoe to the tool and a treadle and suitable connections for actuating the support to press the heel against the tool, substantially as described.

3. A heel-beading machine, having, in combination, a beading-tool, a shoe-support movable longitudinally of the axis of the tool during the operation of the machine, and movable to present the heel of the shoe to the tool, and a treadle and suitable connections for actuating the support to press the heel against the tool, substantially as described.

4. A heel-beading machine, having, in combination a beading-tool, a shoe-support, a laterally-movable carrier, a universal joint between the support and the carrier, a frame in which the carrier is mounted, and means for actuating the frame to press the heel of the shoe against the tool, substantially as described.

5. A heel-beading machine, having, in combination, a beading-tool, a shoe-support movable toward and from the tool, a pivot therefor about which the support is universally movable, and means for actuating the support to press the heel of the shoe against the tool, substantially as described.

6. A heel-beading machine, having, in combination, a shoe-support provided with a clamp for grasping the heel of a shoe, comprising a movable member, springs for actuating said member to engage the heel of a shoe, pawls to lock said member when so engaged, means for actuating the pawls to release said member and for actuating said member against the tension of said springs, substantially as described.

7. A heel-beading machine, having, in combination, a shoe-support provided with a clamp for grasping the heel of a shoe comprising a movable member, springs for actuating said member to engage the heel of a shoe, pawls to lock said member when so engaged, a slide provided with a projection and means for actuating the slide to cause the projection to engage and actuate the pawls to release said member and thereafter to engage and actuate said member against the tension of said springs, substantially as described.

8. A heel-beading tool, provided with a flange to enter the crease between the upper and heel of a shoe, the surface of the flange engaging the heel being provided with grooves extending part way only through the flange to interrupt the surface of the flange and collect dressing for application to the upper surface of the heel, substantially as described.

9. A heel-beading machine, having, in combination, a beading-tool, a movable frame, a shoe-support mounted thereon to move longitudinally of the axis of the tool and to present the heel of the shoe to the tool, and means for actuating the frame to press the heel of the shoe against the tool, substantially as described.

In testimony whereof we affix our signatures in presence of two witnesses.

WILLIAM GORDON.
HOWARD W. GOULD.

Witnesses:
FRED O. FISH,
HORACE VAN EVEREN.