(No Model.)

C. A. SPRAGUE.

IRON BEDSTEAD, &c.

No. 455,976. Patented July 14, 1891.

Fig. 1.

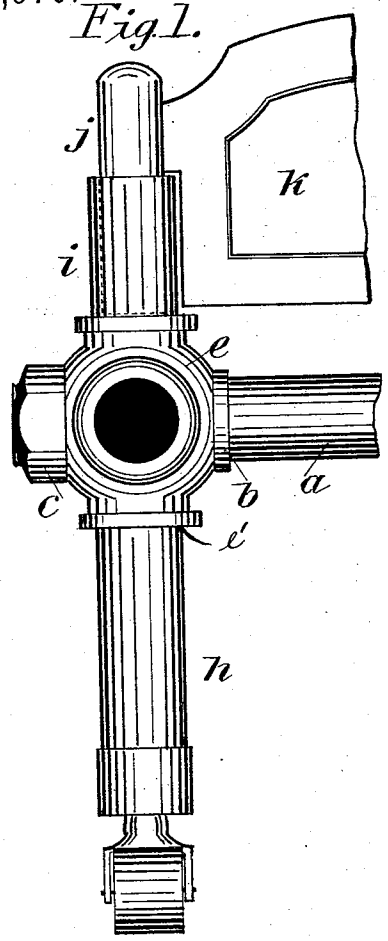

Fig. 2.

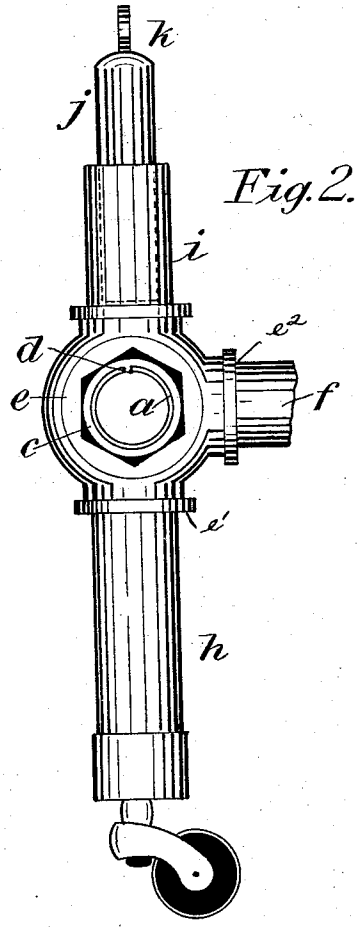

Fig. 3.

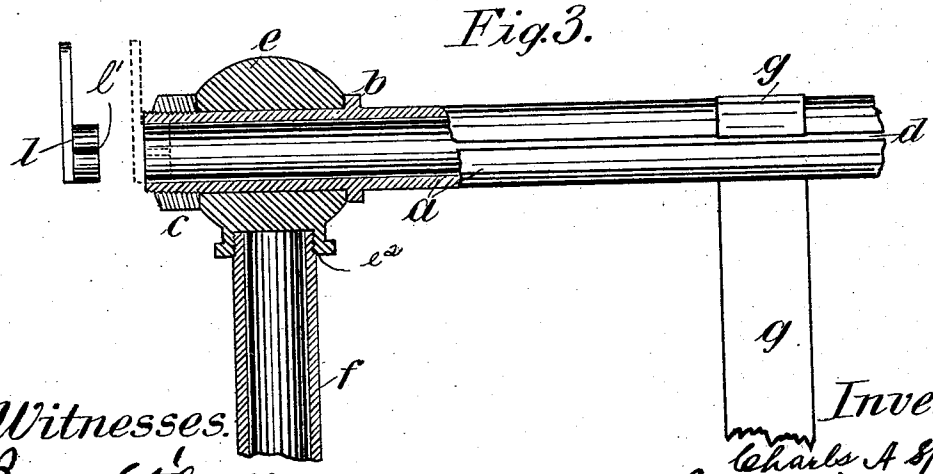

Witnesses.
Byron Stilwell
Daniel Cahleman

Inventor.
Charles A Sprague
Byron Stilwell
Attorney.

THE NORRIS PETERS CO., PHOTO-LITHO., WASHINGTON, D. C.

UNITED STATES PATENT OFFICE.

CHARLES A. SPRAGUE, OF ASHLAND, OHIO.

IRON BEDSTEAD, &c.

SPECIFICATION forming part of Letters Patent No. 455,976, dated July 14, 1891.

Application filed October 19, 1889. Serial No. 327,599. (No model.)

To all whom it may concern:

Be it known that I, CHARLES A. SPRAGUE, a citizen of the United States, residing at Ashland, in the county of Ashland and State of Ohio, have invented new and useful Improvements in and upon Iron Bedsteads, of which the following is a specification.

My invention has relation to improvements in bedsteads.

The object is to provide a construction combining lightness and strength with ready adaptability for taking apart or dismantling when found necessary for the purposes of removal or transportation, and, furthermore, to provide simple and convenient means for tightening the bed-bottom.

With the above objects in view the invention consists in the improved construction and combination of parts, as hereinafter more fully pointed out and described.

In the accompanying drawings, Figure 1 is a view in elevation, looking toward the head-board. Fig. 2 is an elevation at right angles to Fig. 1; and Fig. 3 is a plan view, partly in section, showing the tension device and also illustrating the wrench for turning the nut.

Like letters of reference refer to like parts throughout the several views.

Referring to the drawings, the letter *a* indicates the roller at the head of the bed. This roller is tubular and provided with a longitudinal slot *d*, and also, near the opposite ends thereof, with annular shoulders or flanges *b*. Inasmuch as the foot portion is constructed the same as the head of the bed, it will be necessary herein to describe and illustrate only one of these parts. End pieces *e e* are arranged upon the roller and bear against the annular shoulders above referred to, said end pieces provided upon their under and forward faces, respectively, with screw-threaded sockets e' e^2, the former adapted to receive the legs *h* and the latter the side pieces *f*. The extremities of the head-rollers are provided with external screw-threads to receive nuts C, which bear against the outer faces of the end pieces *e* and serve to hold them firmly against the annular shoulders *b*, so that lateral displacement is thus effectually guarded against. These end pieces *e*, located upon the head-rollers, are furthermore provided with tubular or socketed extensions *i*, which receive the posts *j* of the head-board *k*.

The slot in the head-roller (a corresponding slot being arranged in the foot-roller) is for the purpose of admitting fabric, metal, or other material composing the bed-bottom. It is obvious that when the ends of the bed-bottom are thus inserted and secured, should any looseness or sagging occur all that is necessary to be done is simply to loosen nut C and turn the tubular rail *a* by means of the wrench *l*. (Shown in Fig. 3.) By thus turning the tube the bed-bottom may be rendered taut, after which the nut may be again tightened and the end rail thus held in its adjusted position.

I employ in connection with my invention a tension-strap *g*, (illustrated in Fig. 3,) which may be of any suitable material and extending beneath the center of the bed, with one end extending into the slot of the head-roller. The opposite end of the strap is free; but any suitable means (not shown) may be employed for securing said strap to the foot-roller.

By the above provision is made for an independent adjustment of the strap. As is well known, the center of a bed often sags or becomes loose, while the outer portions or edges still remain taut. It is obvious that when this occurs in a bed constructed in accordance with the above description it would not be advisable to turn one of the rollers in order to tighten the bed-bottom, for it would have the tendency to strain the already taut edges and possibly result in damage. It therefore becomes necessary to provide some means whereby the center may be made taut without straining the bed-bottom in the least. In order to accomplish this, I merely pull the tension-strap tight and secure the free end thereof to the foot-roller in any desirable manner. This will of course raise and support the central sagged portion. When, however, the entire bed-bottom becomes loose, it is evident that in such a case it will be necessary, in order to adjust the same, to turn one of the rollers in the manner before pointed out, the free end of the tension-strap being first released.

The important features of my invention are the means provided for readily taking the

bed apart and the means employed for tightening the bed-bottom, in combination with the tension-strap, forming an independent tightening device.

Having thus described my invention, what I claim, and desire to secure by Letters Patent of the United States, is—

1. In a bedstead, the combination of a tubular head and foot rollers provided with annular shoulders or collars, end pieces having their upper, under, and front faces provided with screw-threaded sockets, legs having their upper screw-threaded ends engaging the under sockets of the end pieces, tubular side pieces provided with screw-threaded ends engaging the front sockets of the end pieces, head and foot boards having their posts entering the sockets of the upper faces of the end pieces, and nuts engaging the threaded extremities of the rollers and bearing against the outer faces of said end pieces, substantially as set forth.

2. In a bedstead, the combination of head and foot rollers provided with longitudinal slots for the reception of the ends of the bed-bottom, a tension-strap passing beneath the center of the bed-bottom and having one end passing into the slot of the head and its opposite end free and adapted to be secured to the foot-roller, and means for rotating the rollers, substantially as set forth.

CHARLES A. SPRAGUE.

Witnesses:
BYRON STILWELL,
SAM. R. JONES.