United States Patent [19]

Tranberg et al.

[11] **3,881,331**

[45] **May 6, 1975**

[54] **LOCKING DEVICE INCORPORATING A LOCK CASE, AN ESCUTCHEON AND A DOOR HANDLE**

[75] Inventors: **Erik Rudolf Tranberg; Nils Kaj Gunnar Rosenqvist,** both of Eskilstuna, Sweden

[73] Assignee: **GKN-Stenman AB,** Eskilstuna, Sweden

[22] Filed: **Oct. 2, 1973**

[21] Appl. No.: **402,688**

[52] **U.S. Cl.** **70/107;** 70/149; 70/218; 70/427

[51] **Int. Cl.** **E05b 59/00;** E05b 13/00

[58] **Field of Search** 70/107, 111, 149, 218, 70/427

[56] **References Cited**

UNITED STATES PATENTS

2,638,770	5/1953	Gutman	70/107
3,791,180	2/1974	Doyle	70/107

Primary Examiner—Albert G. Craig, Jr.
Attorney, Agent, or Firm—Sughrue, Rothwell, Mion, Zinn & Macpeak

[57] **ABSTRACT**

A locking device incorporates a lock case, an escutcheon housing and a door handle. The lock case houses a spring bolt mechanism operable by the door handle and a dead bolt mechanism operable by a locking mechanism. The spring bolt and the dead bolt are separately latchable. The escutcheon housing contains a substantial part and preferably the whole of a lock cylinder mechanism for latching the spring bolt. The dead bolt mechanism is adapted to be actuated, at any rate from one side, by a key via lock cylinder mechanism or a tumbler lever mechanism. From the other side the dead bolt can be latched or released via the said tumbler lever mechanism, a separate lock cylinder mechanism or a handle. Said handle may also cooperate with the spring bolt via a separate mechanism contained in a second escutcheon housing. When the dead bolt is actuated by a tumbler lever mechanism a cover plate in the escutcheon housing preferably cooperates with the spring bolt mechanism so that it covers the key hole for the tumbler lever mechanism when the spring bolt is being latched.

11 Claims, 13 Drawing Figures

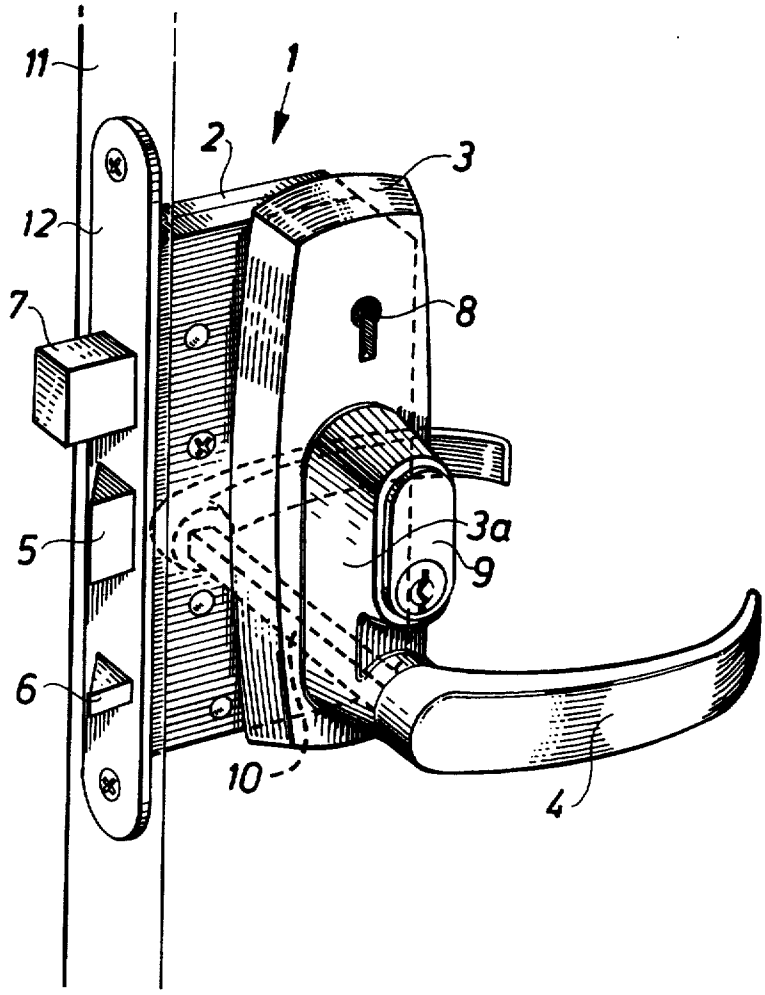

Fig. 1

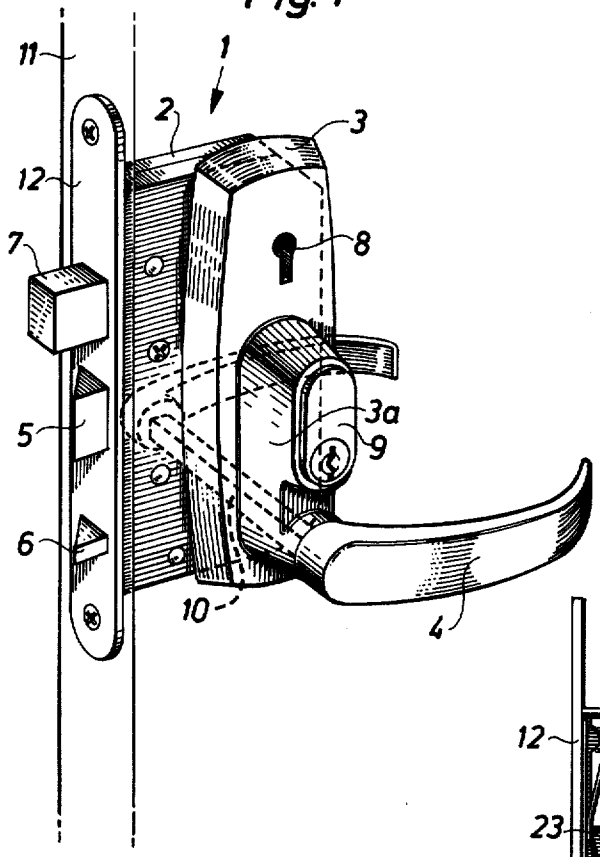

Fig. 2

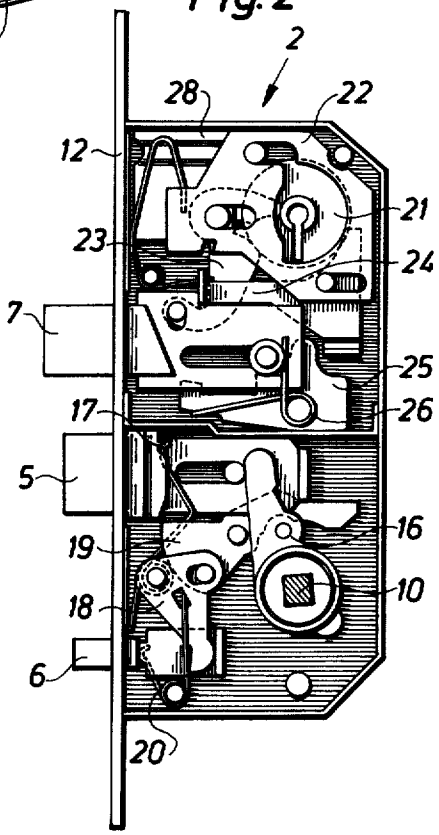

Fig. 3

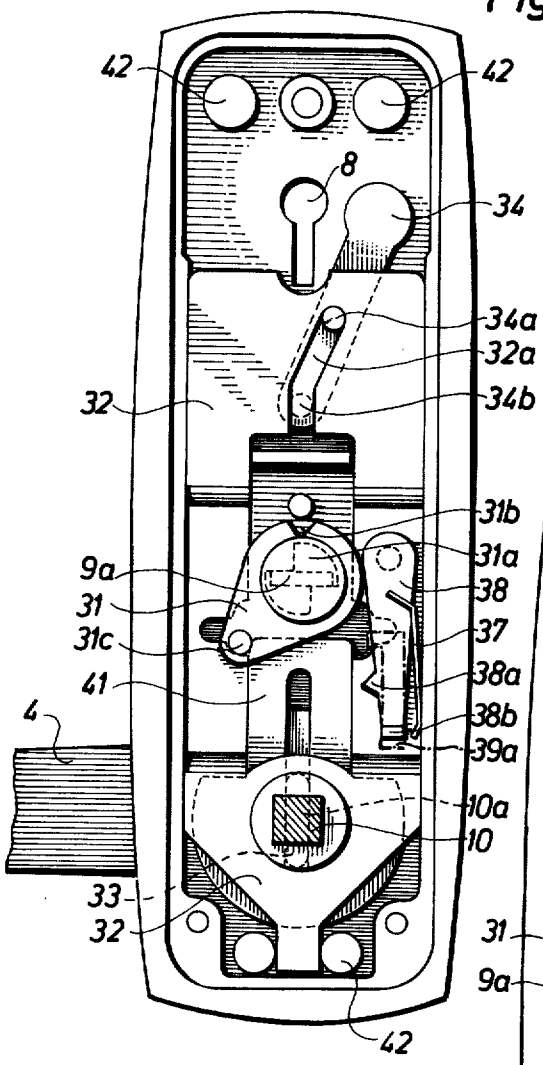
42
42
8
34
34a
32a
34b
32
31b
31a
9a
38
31
37
31c
38a
41
38b
4
39a
10a
10
33
32
42
4

Fig. 4

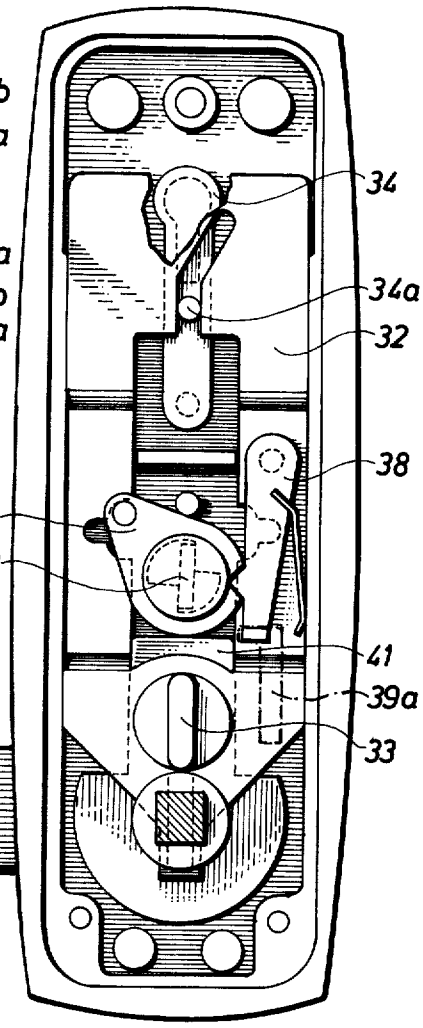
34
34a
32
38
31
9a
41
39a
33

Fig. 5

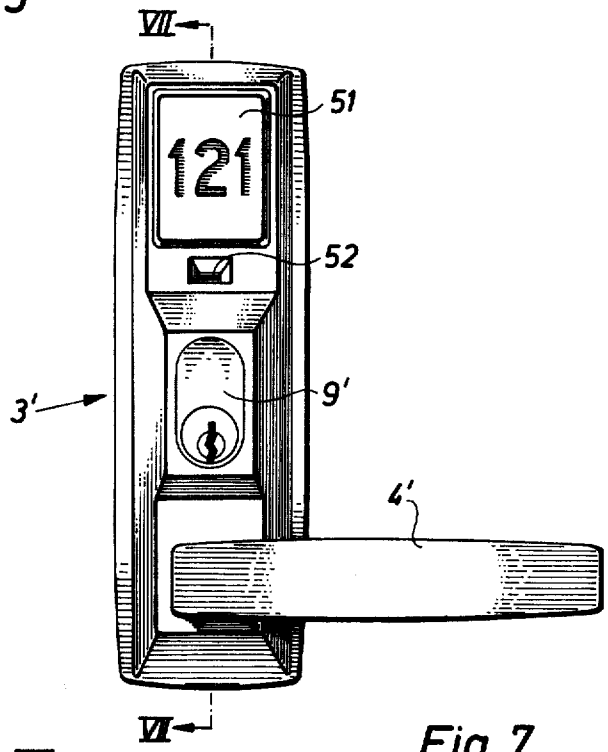

Fig. 6

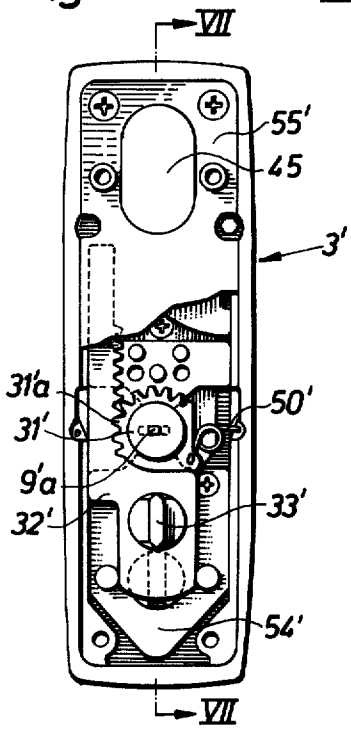

Fig. 7

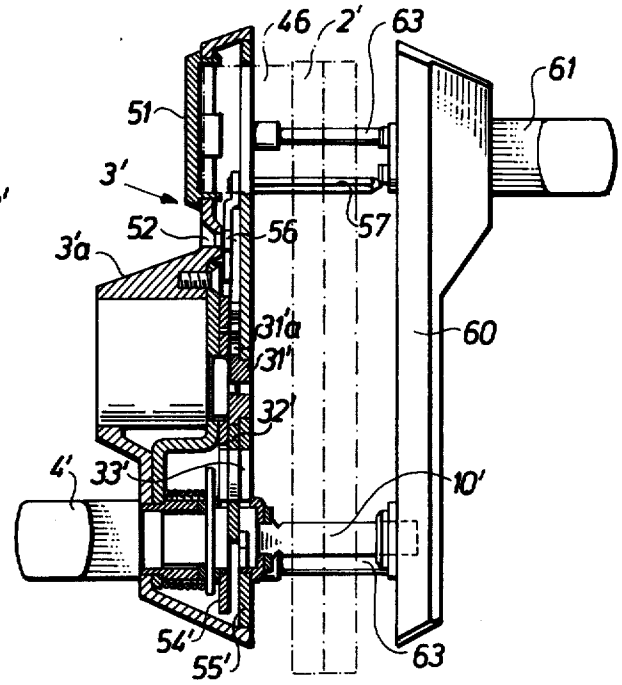

Fig. 8

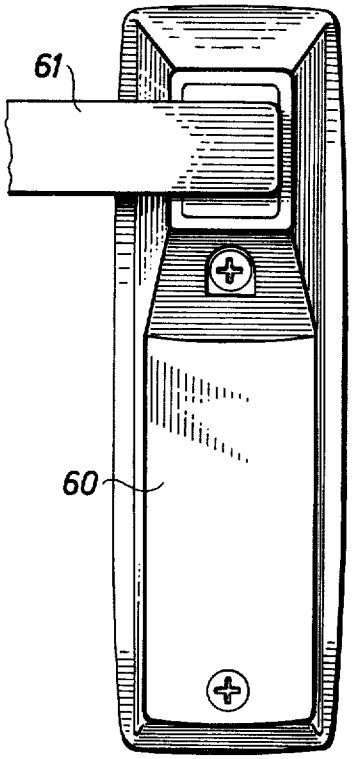

Fig. 9

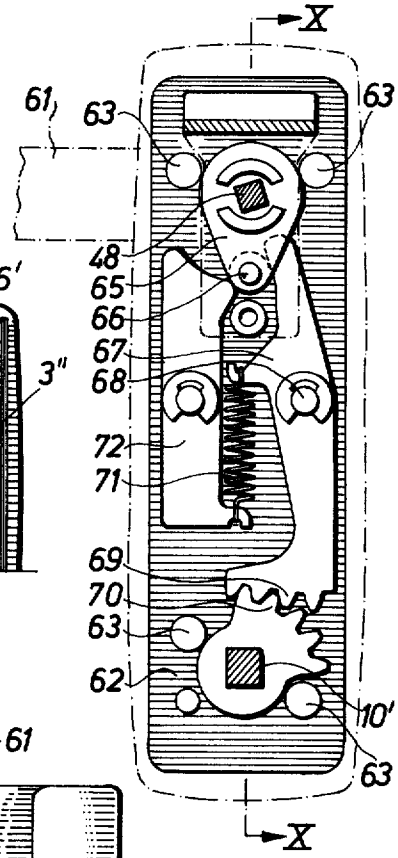

Fig. 13

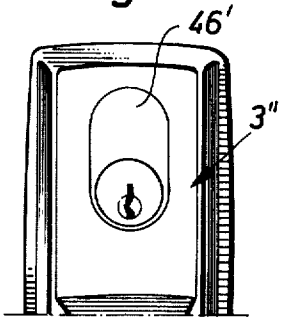

Fig. 10

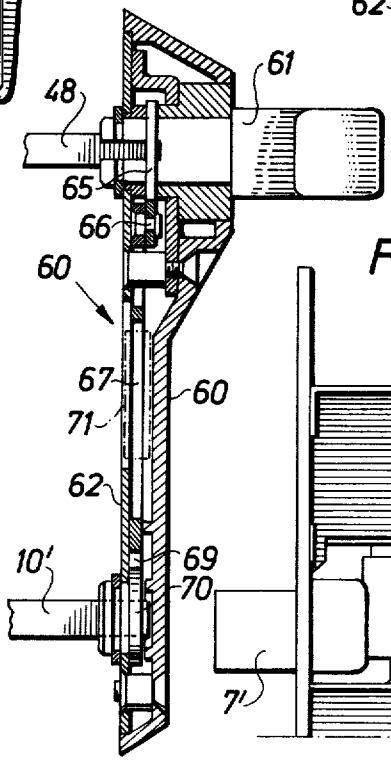

Fig. 12

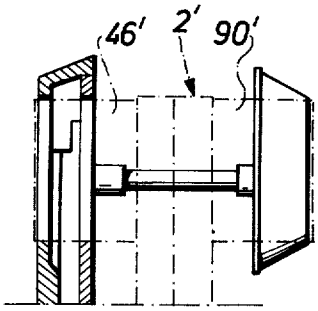

Fig. 11

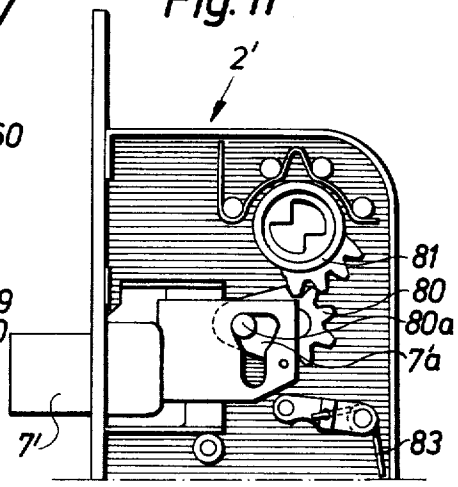

LOCKING DEVICE INCORPORATING A LOCK CASE, AN ESCUTCHEON AND A DOOR HANDLE

This invention relates to a locking device incorporating a lock case, an escutcheon housing and a door handle, the lock case housing a spring bolt operable by the door handle via a sectioned bar, e.g. a square bar, for a cylinder lock mechanism and a deadlock mechanism provided with a dead bolt.

In a locking device of this kind the lock case usually has certain prescribed dimensions in order to fit into recesses provided in doors in accordance with current standards.

One object of the present invention is to provide, without increasing the dimensions of the lock case, a door lock with substantially improved locking safety.

A further object of the invention is to provide a locking device with improved locking safety which by simple exchange can replace a door lock of conventional type, such as a cylinder lock or a tumbler lever lock of normal design, without any major interference with the door being necessary.

A further object is to provide an improved locking device which is readily adaptable for different applications such as a house front door, an apartment door, a hotel room door, etc.

These and other objects are satisfied by a locking device according to the present invention, which in its broadest aspect is characterized by the spring bolt and the deadbolt being separately latchable independently of each other.

Optimal locking safety is obtained in that two separate lock mechanisms are combined in such a manner within one and the same locking device as to be separately latchable. An existing conventional cylinder lock in a door, built in according to current standard, can quickly and easily be replaced by a combined lock according to the invention without any interference with the door being necessary. The master key suite of the replaced cylinder lock can then be retained, if so desired, at the same time as additional locking safety is afforded thereby that the dead bolt is operable by a special key, to which in different individual cases only one person or a certain group of persons has access. Thus in the case of an apartment key the landlord can have a master key which can be used for actuation of the spring bolts for the locking devices of all apartments, while the individual apartment tenant has, in addition to a key for actuation of the spring bolt of the locking device, also and solely a key for actuation of the dead bolt. The apartment tenant can thus prevent the landlord from being able to enter the apartment when the tenant does not wish him to do so.

When the locking device is used as a hotel room lock the hotel management can have access to the keys for actuation of the dead bolts of all the locking devices in the hotel. If so desired, certain rooms can then be latched, so that a person having access to a key to the spring bolt only cannot gain entry into the hotel room. On the other hand the spring bolt as well as the dead bolt can, if so desired, be operable from the inside by one single handle, enabling the hotel guest, while occupying the room, to prevent a member of the cleaning staff with access only to the room key for actuating the spring bolt from being able to enter the hotel room when the hotel guest does not grant access.

In one embodiment the dead bolt is operable by a lock mechanism incorporating a tumbler lever. This embodiment is highly suitable both as a house lock and as an apartment lock, wherein in addition to the spring bolt, the dead bolt is latched via the tumbler lever mechanism this is particularly useful in cases when the house or apartment is left for some length of time or if extra locking of the outside door is wanted at night.

One embodiment of the invention is characterized in that the spring bolt, from the side of the door provided with the escutcheon housing, is both latchable and releasable regardless of whether the dead bolt is latched or released and in that the dead bolt, from the opposite side of the door, is latchable and releasable regardless of whether the spring bolt is latched or released.

In this embodiment, it is possible by comparatively simple means to provide an extra safety arrangement, for example by blocking, from the outside of the door in connection with latching of the spring bolt, access to the key hole of the dead bolt. From the inside, on the other hand, a possibility is offered of actuating the dead bolt as well as the spring bolt in the ordinary manner regardless of whether one or both of them from the outside are latched.

In one preferred embodiment of the invention, the escutcheon houses a greater part of the whole of the lock cylinder of the cylinder lock and the lock cylinder is arranged for actuation of a member in the escutcheon housing by means of which the door handle is releasable from the sectioned bar for or at the latching of the spring bolt.

Within the scope of the invention it is thus possible to locate some of the operating means to the escutcheon housing which has a stout, robust and at the same time attractive design. Also, the prescribed lock case dimensions are maintained and good and reliable function of the two lock mechanisms are secured.

One further embodiment of the invention is characterized in that also the deadlock mechanism is arranged to be actuated, from one side, by a lock cylinder. This embodiment is particularly preferable when the locking device is used as a hotel room lock, in which case the above-mentioned advantages are also obtained. It can however also be used to advantage as both a house lock and an apartment lock.

Despite the two bolts being latchable independently of each other, the locking device is in one embodiment provided with means for such interconnection of the two lock mechanisms that, at any rate from one side, the two bolts are releasable by actuation of the lock mechanism of only the dead bolt. The interconnecting means can then, according to a preferred embodiment, at any rate partly be contained in an escutcheon housing located on the opposite side of the escutcheon housing which houses the lock cylinder.

This embodiment is thus characterized by stoutly constructed escutcheon housings on both sides of the door, one of which, located on the inside of the door, houses the said mechanism that interconnects the two lock mechanisms. It is then preferred that the interconnecting means be operable by means of a handle carried in the last-mentioned escutcheon housing, the device being elaborated to advantage so that turning of the handle in one direction initially causes releasing of the dead bolt and that upon further turning releasing of the spring bolt is achieved.

The escutcheon housing is appropriately provided at the rear with a cover plate having different recesses, among others for guiding of the driver and a projection provided on the bolt catch, and a keyhole, so that access to the lock case for actuation of the dead bolt is allowed. Further members, such as a retaining plate, a washer through which the spindle of the door handle is passed, a stop ring and a guide plate are also housed in the escutcheon housing on the inside of the aforesaid cover plate. The escutcheon housing is secured to the door by means of a number of socket nuts passed through the cover plate, which socket nuts engage with screws that from the inside of the door are passed through an escutcheon housing or member which can be designed in different ways.

In practice it is preferred that the dead bolt housed in the lock case be located above the spring bolt. It is, however, conceivable to instead locate the spring bolt uppermost. It is preferred that the spring bolt, as is the case in a conventional lock, interacts with a latch pawl which, when the door is closed, releases a catch hook that latches the spring bolt. By this means the possibility is eliminated of moving the spring bolt to the open position by means of a tool introduced between the side edge of the door and the door frame.

Further features of a locking device according to the invention will become apparent from the following description of some embodiments thereof, wherein reference is made to accompanying drawings.

FIG. 1 is a perspective view showing two principal parts, i.e., the escutcheon housing and lock case of a locking device according to the invention.

FIG. 2 is a side view of the lock case with one wall removed, so that the locking mechanisms contained therein are revealed.

FIG. 3 is a rear view of the escutcheon housing shown in FIG. 1 after removal of a cover plate which forms the inner end surface of the escutcheon housing. The figure shows interacting parts in a position in which the door handle and square bar are connected together with each other.

FIG. 4 is a view corresponding to FIG. 3 with interacting parts in a position in which the door handle is disengaged from the square bar. A cover plate then covers the keyhole of the dead lock.

FIG. 5 is a front view of the escutcheon housing for a different embodiment of a locking device according to the invention, especially intended for hotel room locks.

FIG. 6 shows the escutcheon housing according to FIG. 5 viewed from the rear.

FIG. 7 is a section along line VII—VII of the housing according to FIG. 5, while also illustrated is an escutcheon housing fitted to the opposite side of the door (not shown).

FIG. 8 is a front view of an escutcheon housing located on the inside of the door.

FIG. 9 shows the escutcheon housing according to FIG. 8 viewed from the rear.

FIG. 10 is a section along line X—X of the escutcheon housing according to FIG. 8.

FIG. 11 shows the upper part of a lock case modified in relation to FIG. 2, in which lock case the dead bolt is arranged for actuation of a cylinder lock mechanism.

FIG. 12 is a cross section showing a part of yet another embodiment, in which the dead bolt on both the inside and the outside of the door is operable by means of a lock cylinder.

FIG. 13, finally, shows a part of an escutcheon housing further modified in relation to FIGS. 1 and 5.

A locking device **1** comprises a lock case **2** and an escutcheon housing **3** in which is mounted a door handle **4**. The door case houses both a spring bolt **5** operable by the door handle as well as a latch pawl **6** and appurtenant mechanisms, which are shown in FIG. 2 and will be described in more detail below, and also a dead bolt **7** and appurtenant tumbler lever mechanism, which is intended to be operated by means of a lever key which is insertable through a keyhole **8** provided in the escutcheon housing. A thickened part **3*a*** of the escutcheon housing houses a lock cylinder **9** of conventional type, by means of which the door handle **4** can be disengaged from the square bar **10**.

The spring bolt **5**, the latch pawl **6** and the dead bolt **7** are passed through recesses in a strike plate **12** fitted in the side edge of the door **11**.

The lock case, despite its containing two mutually independent lock mechanisms, has the same standard dimensions as lock cases for conventional spring bolt locks with, attached to the lock case, a lock cylinder or dead lock with a bolt operable by a door handle. A lock case **2** according to the present invention can therefore take the place of previously known conventional lock cases without any interference with the door being necessary.

The principal parts of the two lock mechanisms are illustrated in FIG. 2. When the door handle is turned, a follower **16** provided on the square bar **10** moves the spring bolt **5** towards the right in FIG. 2 by the action of a spring **17**. The latch pawl **6** interacts via a link **18** with a bolt hook **19**. When the door is closed the latch pawl **6** is pushed in by the action of a spring **20**, whereupon the bolt hook **19** is released by the link **18** so that the spring bolt **5** is held fixed in the locked position and cannot be displaced inside the lock case, e.g. by means of a tool introduced between the door frame and the strike plate **12**.

The movements of the dead bolt **7** are regulated by a key insertable in the keyhole **8** via a bolt disc **21**, preferably seven spring-actuated tumbler levers **22**, a bolt arm **23**, a latch arm **24** and a bolt hook **25**, which is actuated by a spring **26**. The lowermost lever rests against a support plate **28**.

The mechanism housed in the escutcheon housing **3** will now be described in greater detail with reference to FIGS. 3 and 4.

The active part **9*a*** of the lock cylinder interacts with a follower **31**, which upon turning of the lock cylinder by means of a key (not shown) is movable between two end positions shown in FIG. 3 and FIG. 4, respectively. Two fan-shaped recesses **31*a*** in the follower allow turning of the key of the lock cylinder a quarter of a revolution in the normal manner in order for the key to be removable from the lock without actuating the follower. Via a pin **31*c***, the follower actuates a bolt **32**, which is in the form of a disc with a centrally bowed section and a pointed lower end. The bolt is arranged to move a driver **33** into and out of a recess provided in the square bar **10** for interconnection of the door handle **4** and the square bar **10** or for disengagement of these two parts in relation to each other. In its upper part, the bolt **32** is provided with an inclined groove **32*a***, in which is inserted a pin **34*a*** of a cover plate **34**, which when the

bolt is moved upwards is swung to a position in which it covers the keyhole **8**. This thus occurs when the door handle is disengaged from the square bar **10**.

The follower **31** works together with a bolt hook **38** pivoted on the bolt and actuated by a spring **37**, having a hook member **38***a*, which in the disengagement position shown in FIG. **4** enters into a recess **31***b* provided in the follower **31**. The bolt hook **38** is also provided with a projection **38***b* which is guided in a recess **39***a* in a cover plate (not shown) applied to the rear of the escutcheon housing.

In the position shown in FIG. **4**, the projection **38***b* is inserted in a sideways-directed section of the recess **39***a*.

The said cover plate (not shown) is also provided with recesses for guidance of the driver **33** as this moves.

The thickened part **3***a* of the escutcheon housing forms, as mentioned above, a housing for the lock cylinder of the cylinder lock. The bottom of this housing consists in part of a retaining plate with a section resting against the said cover plate (not shown). Also connected to this retaining plate is a washer, which is passed through the spindle of the door handle **4** and rests against a guide plate **41** provided for the bolt **32**.

The door handle is further provided with a shearing notch causing it to shear off if it is subjected to excessive violence when it is disengaged from the square bar.

Reference number **42** designates recesses for socket nuts which are used to apply the escutcheon housing by means of screws (not shown) which are passed through an escutcheon element (not shown) attached to the inside of the door.

Described in FIGS. **5–7** is a modified embodiment of the locking device largely intended to be put into use as a hotel lock. The most important difference as against the previously described embodiment is that the dead bolt from the outside of the door is intended to be actuated by a cylinder lock mechanism. For this purpose, the escutcheon housing **3'** is provided with a recess **45** for a lock cylinder **46** instead of the keyhole **8** shown in FIG. **1**. For actuation of the dead bolt from the inside of the door, use is made in this embodiment of a handle **61**, connected with a square axle **48** passing through the lock case **2'**. The handle **61** is carried in an escutcheon housing **60** fitted on the inside of the door, which escutcheon housing contains certain operating means which will be described more closely below and with reference to FIGS. **8–10**.

In accordance with what has been explained above only the hotel management will have access to the key belonging to the lock cylinder **46**. This lock cylinder will thus normally not be operable from the outside. The escutcheon housing **3'** is therefore provided with a recess for a cover plate **51**, which normally hides the lock cylinder. Shown in FIG. **5** is the cover plate provided with a number, appropriately the corresponding room number, but the cover plate **51** can naturally be marked in some other way or be without marking if so desired. The escutcheon housing **3'** is also provided with an indication window **52**, in which an indication means **56, 57**, cooperating with the dead bolt, marks when the door is latched from the inside. This serves at the same time as a signal to examplewise members of the hotel staff, who cannot gain entry to the room by actuation of the lower lock cylinder **9'** by means of, for instance, a master key fitting all the doors.

If, on the other hand, the hotel management examplewise wishes to prevent anyone from gaining entry to the hotel room concerned, the cover plate **51** is removed, whereafter the dead bolt is latched by means of a special key which fits the lock cylinder **46**.

In FIGS. **6** and **7** it is shown how the interior of the escutcheon member **3'** is elaborated. In relation to the embodiments shown in FIGS. **3** and **4**, the difference is that there is no need of the special cover plate for an upper keyhole since there is none. In this embodiment the follower **31'** is provided with teeth **31'***a*, which mesh with corresponding teeth on a displaceable bolt slide **32'**, which in its lower part has a driver member **33'** which when the follower is turned is brought into or, as applicable, out of a recess in the square bar **10** in essentially the same manner as described in connection with FIGS. **3** and **4**.

The follower **31'** is retained in its two end positions by a torsion spring **50'**. Reference numeral **54'** designates a guide plate for the driver member **33'**. Reference numeral **55'** designates a rear cover plate for the escutcheon housing.

Illustrated in FIGS. **8–10** is the escutcheon housing **60** located on the inside of the door and its associated parts. The escutcheon housing is provided with a handle **61**, which in the manner described below allows actuation of the lock mechanisms of both the dead bolt and the spring bolt. On the back of the escutcheon housing is a baseplate **62**, which is secured to the escutcheon housing on the outside of the door by means of four screws **63**.

The upper square axle **48** constitutes an operating axle or spindle for the lock mechanism for the dead bolt **7'** shown in FIG. **11**.

Located on the axle **48** is a follower **65** provided with a roller or pin **66**, which actuates an intermediate arm **67**, the central part of which is supported in a pin **68**. In its lower end, the intermediate arm **67** has a toothed segment **69** which meshes with a corresponding toothed segment **70** on the lower square bar **10'**. The intermediate arm **67** is swingable by the influence of a spring **71**, the lower element of which interacts with a catch member **72**, the purpose of which is to hold the follower **67** in either rest position.

Upon turning of the handle **61**, so that the square axle shown in FIG. **9** turns clockwise, the dead lock mechanism shown in FIG. **11** is actuated so that the dead bolt **7'** takes up the locked position.

Upon turning of the handle **61** in the opposite direction from the locked position, the dead bolt **7'** is initially moved to the release position, after which further turning of the handle causes the follower **65**, via the intermediate arm **67** and the two toothed segments **69** and **70**, to actuate the lower square bar **10'** so that the spring bolt takes up the release position.

It is seen from FIG. **11** that the movement of the dead bolt **7'** via a toothed segment **80** is controlled by a toothed cylinder follower **81**, which is actuated either by a lock cylinder **46** (FIG. **7**) or from the opposite side by a handle **61** via the square bar **48**.

The toothed segment **80** has a pin **80***a* which engages in a groove **7'***a* in the rear end of the dead bolt **7'**. The movements of the dead bolt take place through the influence of a spring **83**.

In FIG. **11** only the upper part of the lock case **2'** is shown. The lower part provided with the spring bolt can be elaborated in largely the manner illustrated in

FIG. 2 or be designed in some other manner depending on the actual requirements. The latch member **6** can thus instead for example be located nearer the spring bolt **5**.

FIG. **12** illustrates a modification of the embodiment according to FIG. **7**. In this embodiment, the dead bolt is arranged to be actuated from both the inside and the outside by a separate lock cylinder **46'** and **90'**, respectively. In this embodiment there is no escutcheon housing on the inside which allows actuation of the spring bolt mechanism. Instead the latter is actuated in the normal manner by means of a handle applied to the lower square axle. This embodiment is especially intended for use for outside doors of houses and apartments. Both the upper lock cylinders can be operable by the same key, but it is naturally possible if so desired to adapt the lock cylinder positioned in the escutcheon housing to fit the said key also. The locking cylinder **9** may preferably be designed as a master key cylinder the key of which, however, does not fit into the rest of the cylinders **46'**, **90'**.

Shown in FIG. **13** is the upper part of an outer escutcheon housing **3''**, which is suitable for use with a locking device according to FIG. **12**. This escutcheon housing differs from that shown in FIG. **5** in that there is no indication window, in addition to which the housing lacks means for application of a cover plate over the upper lock cylinder. Otherwise, the two escutcheon housings can largely be held to correspond to each other.

In all the embodiments dealt with above the dead bolt and appurtenant lock mechanism are located uppermost in the lock case. As an alternative, the spring bolt with its lock mechanism can instead be located uppermost. Several other conceivable variations are possible within the scope of the invention. The latch pawl **6** of the spring bolt, for example, can interact with a differently elaborated, automatically latching lock mechanism than in the embodiment shown. The latch pawl **6** can thus be located higher up, as in FIG. **2**, i.e., closer to the spring bolt **5**, and the latch pawl can also be located between the spring bolt **5** and the dead bolt **7**. In a further modification, the lock cylinder **9** or **9'** is only partly inserted in the escutcheon housing, which can then in order to further limit the part of the escutcheon plate protruding from the door be recessed in the door.

The invention also offers many other modifications within the scope of its fundamental concept as defined in the appended claims.

What we claim is:

1. A locking device comprising:

a lock case, an escutcheon housing and a door handle;

the lock case including therein a spring bolt operable by a sectioned bar, said sectioned bar in a cooperative arrangement with the door handle;

a cylinder lock mechanism to effectuate a locking of said spring bolt, said lock mechanism being substantially contained in the escutcheon housing;

a dead lock mechanism including a dead bolt latchable separately from the spring bolt; and

means in said escutcheon housing cooperating with said lock cylinder for releasing the door handle from the sectioned bar upon the latching of the spring bolt.

2. A locking device according to claim **1** wherein the escutcheon housing has an opening for a second locking mechanism adapted for the dead bolt.

3. A locking device according to claim **2** wherein the locking cylinder is positioned in a projecting portion of the escutcheon housing.

4. A locking device according to claim **1** wherein the lock cylinder is positioned offset from the axis of the sectioned bar level between said axis and the dead bolt.

5. A locking device according to claim **1**, including means for an interconnection of the two lock mechanisms such that from one side, both the dead bolt and the spring bolt are releasable by actuation of the lock mechanism of the dead bolt, said interconnecting means being partly contained in a second escutcheon housing which is located on the opposite side of the door in relation to the escutcheon housing which houses the lock cylinder and being operable by said handle.

6. A locking device according to claim **5**, characterized in that turning of the handle in one direction will cause, upon commencement of the turning movement, a releasing of the dead bolt and, upon further turning, a releasing of the spring bolt.

7. A locking device according to claim **5**, wherein both escutcheon housings are of substantially the same length as the lock case.

8. A locking device according to claim **1**, wherein the dead bolt is releasable from the side of the door provided with the escutcheon housing only after the spring bolt has been released or activated for release.

9. A locking device according to claim **8**, wherein the dead bolt mechanism interacts with a tumbler lever mechanism which is operable by means of a key, the said key being insertable through a keyhole made in the escutcheon housing, the lock cylinder of the cylinder lock interacting with a means in the escutcheon housing arranged in one position to cover the keyhole of the dead lock so that a key cannot be inserted.

10. A locking device according to claim **9**, wherein the said means comprise a cover plate which is arranged to cover the keyhole when the spring bolt is latched by releasing of the door handle from the sectioned bar.

11. A locking device according to claim **10**, wherein the lock cylinder cooperating with means, displaceable in the escutcheon housing, interacts with the cover plate, said displaceable means also arranged to bring a driver into engagement or disengagement, respectively, with a recess provided in the sectioned bar for interconnection and releasing, respectively, of the door handle and sectioned bar.

* * * * *