March 4, 1930. W. G. FLUHARTY 1,749,739

CARRIER WAVE TELEGRAPHIC TRANSMISSION SYSTEM

Filed April 2, 1928 3 Sheets-Sheet 1

Fig. 1.

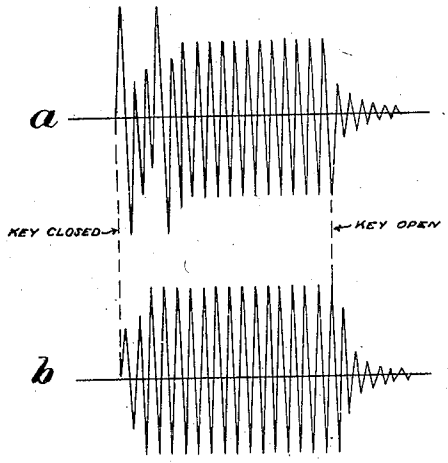

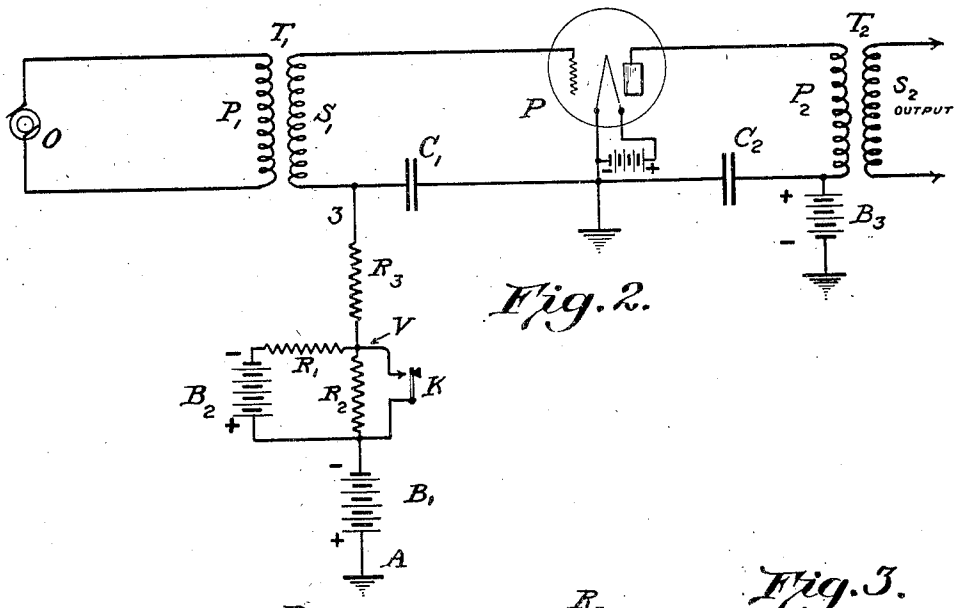

Fig. 2.

Fig. 3.

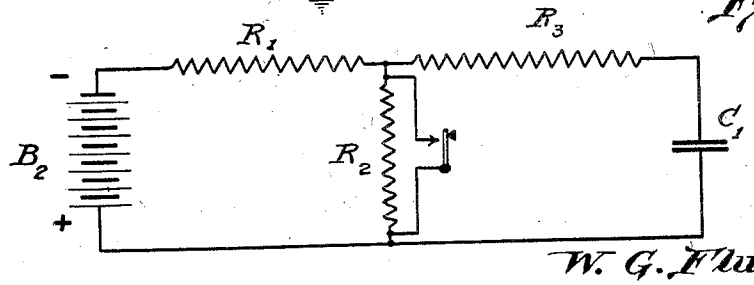

Inventor

W. G. Fluharty

By

Eugene C. Brown

Attorney

March 4, 1930. W. G. FLUHARTY 1,749,739

CARRIER WAVE TELEGRAPHIC TRANSMISSION SYSTEM

Filed April 2, 1928 3 Sheets-Sheet 2

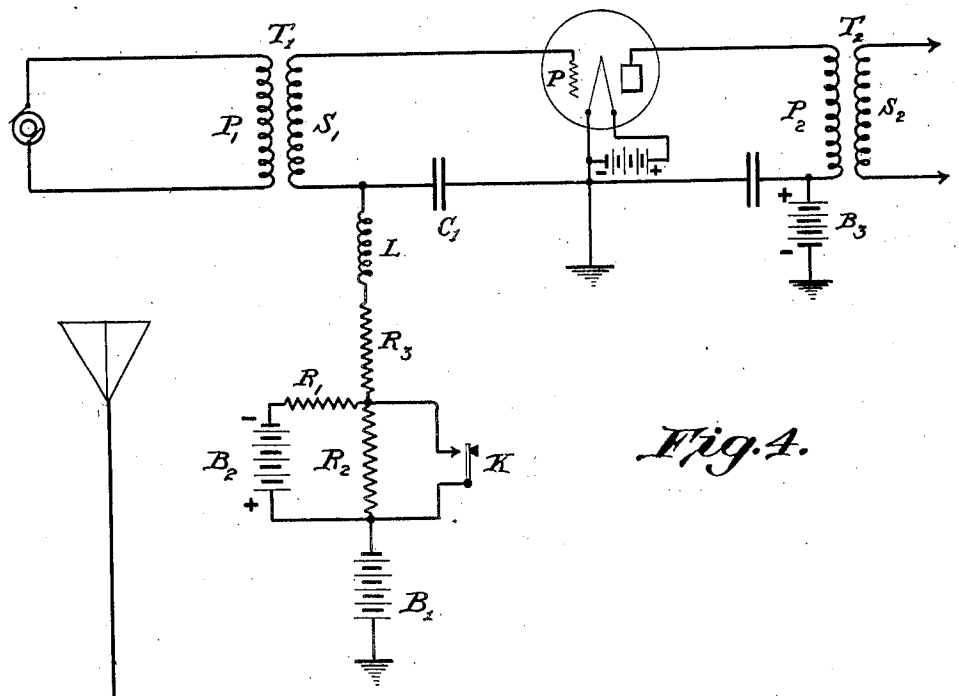

Fig. 4.

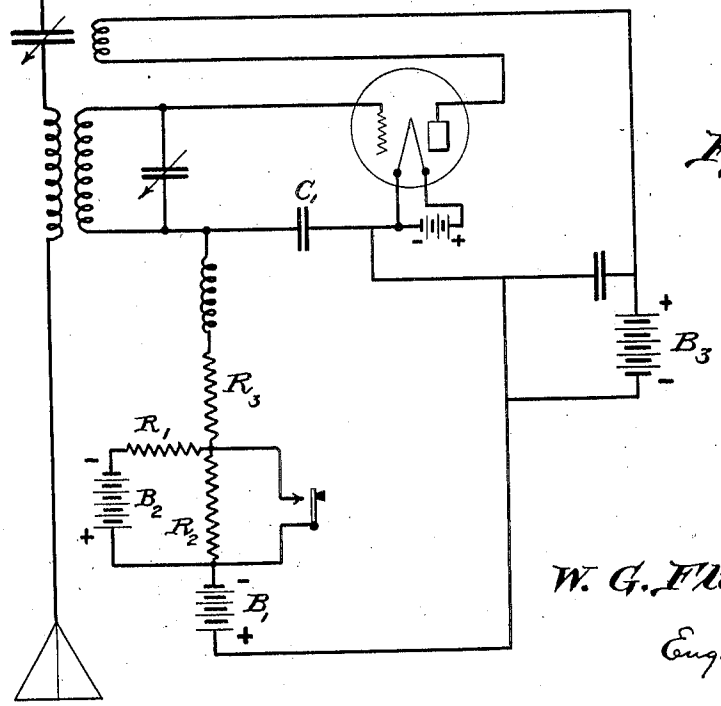

Fig. 5.

Inventor
W. G. Fluharty
Eugene C. Brown
Attorney

March 4, 1930. W. G. FLUHARTY 1,749,739

CARRIER WAVE TELEGRAPHIC TRANSMISSION SYSTEM

Filed April 2, 1928 3 Sheets-Sheet 3

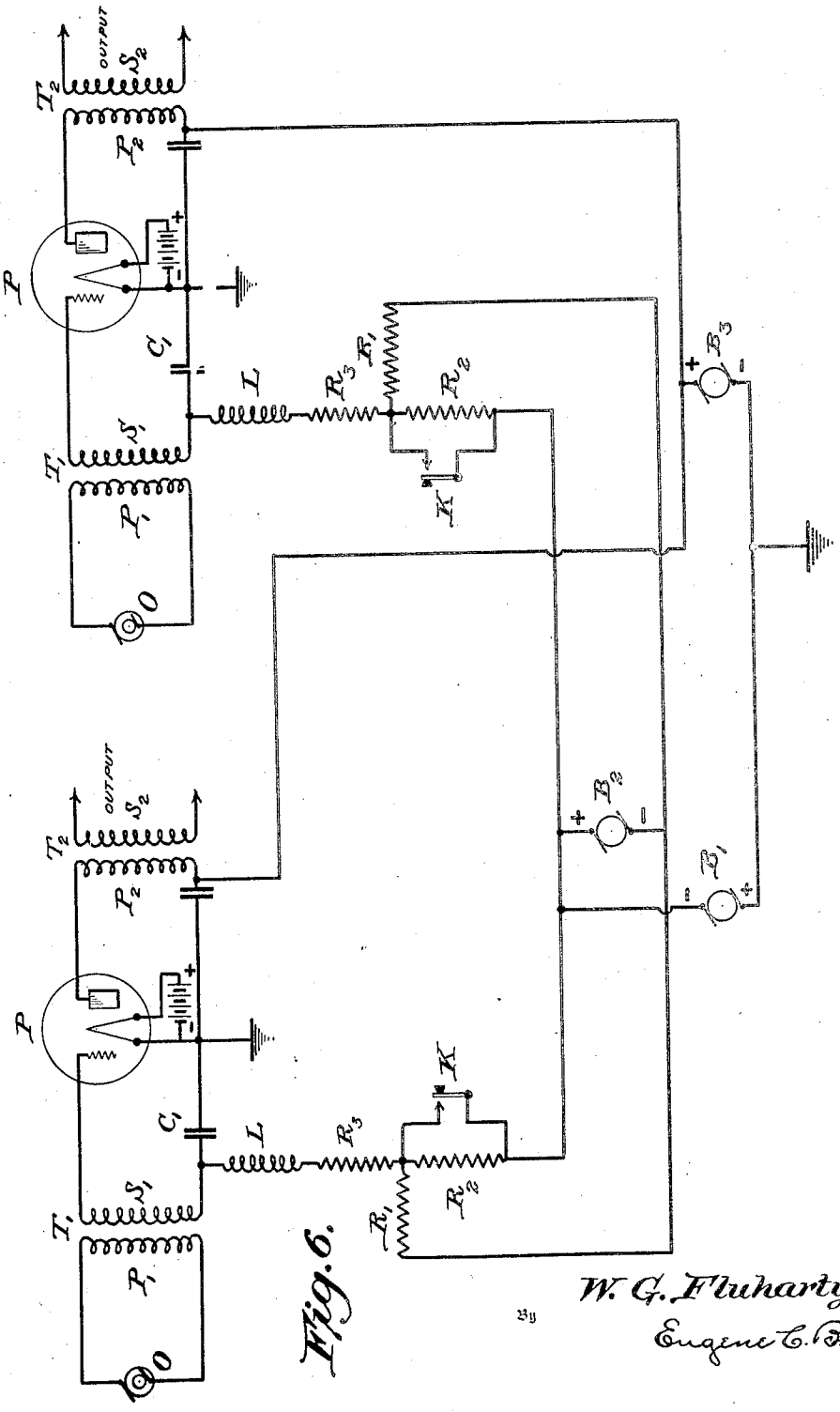

Fig. 6.

Inventor

W. G. Fluharty

By Eugene C. Brown

Attorney

Patented Mar. 4, 1930 1,749,739

UNITED STATES PATENT OFFICE

WILLIAM G. FLUHARTY, OF ROCKVILLE CENTER, NEW YORK, ASSIGNOR TO THE WESTERN UNION TELEGRAPH COMPANY, OF NEW YORK, N. Y., A CORPORATION OF NEW YORK

CARRIER-WAVE TELEGRAPHIC TRANSMISSION SYSTEM

Application filed April 2, 1928. Serial No. 266,654.

My invention relates to an improved keying arrangement for carrier wave telegraphic transmission systems.

Heretofore in telgraphic transmission systems of the carrier wave type employing vacuum tube modulators or repeaters, the transmitting key or relay controlling the modulator in accordance with the telegraphic signals was placed directly in the plate circuit of the tube, or directly in the grid or grid-battery circuit of the tube. When so placed, the operation of the key or relay gives rise to disturbances commonly known in the art as "key thumps." These disturbances or distortions transmitted by the carrier frequency, not only cause disturbances in the receiving set for which the signals are intended, but they also cause disturbances in other receiving sets tuned to different wave lengths. These disturbances are particularly objectionable in systems in which several carrier frequencies are used for the simultaneous transmission of several messages; where the key thump disturbances break through the several tuned receiving systems and cause false signals to be heard or recorded, or cause unnecessary distortion of the received signal.

It is an object of my invention to devise a keying system which will be free from the disturbances commonly known as key thumps.

A further object of my invention is to devise a keying system in which the rate of rise of the envelope of each signal impulse may be controlled and given any desired slope.

My invention is illustrated in the accompanying drawing in which:

Fig. 1 shows typical oscillographic records of a signal with the key thump and a signal without the key thump.

Fig. 2, is a circuit arrangement illustrating my invention as applied to a carrier wave transmitting system.

Fig. 3, is an equivalent circuit arrangement of certain parts of the circuit of Fig. 2.

Fig. 4, illustrates a modification of my invention.

Fig. 5, illustrates my invention as applied to a radio telegraphic transmitting system.

Fig. 6, is a circuit diagram showing two transmitters supplied from common "B" and "C" current sources.

Referring to Fig. 2, O is an oscillator operating continuously at a predetermined frequency and supplying carrier current to transformer T_1 connected to the input circuit of three-element vacuum tube P. One terminal of the secondary S_1 of transformer T_1 is connected directly to the grid of the tube P, while the other terminal of the secondary is connected to one terminal of a condenser C_1, and to one terminal of a resistance R_3. The remaining terminal of condenser C_1 is connected to the grounded side of the filament of tube P. The remaining terminal of resistance R_3 is connected to ground through a resistance R_2 and a grid biasing or "C" battery B_1. An auxiliary grid biasing or "C" battery B_2 is arranged to produce a voltage drop across resistance R_2, through a controlling resistance R_1. A key K is connected in shunt to resistance R_2 and is arranged to short-circuit this resistance in accordance with the telegraphic signals. The output circuit of tube P is provided with a transformer T_2, the primary winding of which is connected in the plate circuit of the tube in series with the plate battery B_3. A by-pass condenser C_2 is connected around the plate battery B_3.

The battery B_1 is the usual grid biasing or "C" battery and is adjusted in potential to cause the tube P to operate substantially at the middle of the straight portion of the plate current characteristic curve. The battery B_2 is so connected that the potential drop across resistance R_2 tends to make the grid more negative. The magnitude of the voltage drop across resistance R_2 may be adjusted to any desired value by the proper selection of the values of the two resistances R_1 and R_2 and of the value of the potential of battery B_2.

The operation of the system shown in Fig. 2 is as follows:—

With the key K open, the combined potentials of "C" battery B_1 and the negative potential drop across resistance R_2 is of such value that substantially no plate current flows through tube P. Thus, with key K

open, there is no transmission of carrier waves from oscillator through the modulator tube P. Upon closing key K, the voltage across resistance R_2 is short-circuited. Prior to the closing of key K condenser C_1 was charged to a potential equal to the combined voltages of "C" battery B_1 and the voltage drop across resistance R_2. Upon closing key K, the condenser C_1 discharges through the circuit including resistance R_3 and battery B_1, that is, the condenser discharges through this circuit until its terminal voltage becomes equal to the voltage across battery B_1. When steady conditions are attained within the circuit, the biasing potential upon the grid is equal to that supplied by the battery B_1, and carrier waves are repeated and amplified from oscillator through the modulator or relay tube P to the output circuit. Due to the fact that the potential impressed upon the grid of tube P is equal to the voltage across the condenser C_1 at any instant, and due to the fact that the condenser does not discharge instantaneously, the transmission of the carrier currents through the tube is not initiated abruptly but in a smooth manner. The gradual rise or shaping of the envelope which comprises the signal, may be controlled by controlling the rate of discharge of the condenser C_1 when the key K is closed.

Upon opening the key after the transmission of a signal character, an additional potential is thrown in series with that of the battery B_1. This potential is the drop across resistance R_2 as mentioned above, and is of such magnitude and polarity that the total biasing potential on the grid of tube P is made so highly negative that transmission of carrier current through the tube ceases. However, the carrier current is not abruptly stopped due to the fact that condenser C_1 does not immediately assume the combined potential of battery B_1 and the drop across resistance R_2, but a short time is required for the condenser to become fully charged and to assume its maximum voltage. Thus, manipulation of key K starts and stops the transmission of carrier current through the tube without breaking or interrupting any of the main circuits. Also, by virtue of applying the auxiliary biasing battery at the low potential side of the tube circuit, the values or characteristics of the tube circuits are not disturbed, and there is no distortion of the transmitted signals other than those caused by the inherent characteristics of the tube used and its adjacent circuit.

The time rate of change of the potential across condenser C_1 may be controlled by properly choosing the values of the condenser and of resistance R_3 and other constants of the associated circuit. The rate of change of potential across condenser C_1 may be predetermined by the application of well known and demonstrated formulas. As the potential on the grid of tube P is always that of the condenser C_1, the changes of the grid potential will follow directly those of the condenser C_1 and not those caused directly by opening the key K. In other words, the potential change across the condenser C_1 caused by operation of the key follows a transient, which may be controlled by my keying system.

Fig. 3 is the equivalent circuit of that part of the circuit in Fig. 2 which has to do with the transient voltages. When considering the operation of the transient voltages, we are concerned only with the change of voltage across the condenser C_1, consequently the remainder of the circuit of Fig. 2 may be ignored.

Referring to Fig. 3: some time after the key K has remained closed there will be no potential across the condenser C_1, as the charge will have equalized through the resistance R_3 and the key, also the potential across R_2 is short-circuited. At the instant the key is opened the potential across R_2 is released and starts to charge the condenser C_1 at a rate expressed in the following well known formula found in standard hand books on the subject.

$$V_t = E\left(1-\epsilon^{\frac{-t}{RC}}\right)+V\epsilon^{\frac{-t}{RC}} \text{ volts} \quad (1)$$

V_t = voltage across the conductor at any time after the key is opened.

E = impressed voltage, or voltage across R_2.

t = time in seconds.

V = voltage across condenser before opening key.

As there was no voltage across the condenser C_1 just before the key was opened the above formula reduces to

$$V_t = E\left(1-\epsilon^{\frac{-t}{RC}}\right) \quad (2)$$

From this formula the proper values of R_1, R_2 and R_3 may be determined to give us say 10 volts potential at a time, say one one-hundredth of a second after the key K is open. Let us adjust B_2 and R_1 and R_2 so that the voltage across R_2 is 12 volts in its steady state; then

$V_t = 10$; $E = 12$; $t = .01$; $\epsilon = 2.718$ a constant.

$R = R_3$ unknown resistance.

$C = .5$ microfarads

or $\frac{.5}{1000000}$ farads.

Solving for R in the above equation we have

$$R = \frac{-t}{\log\epsilon\left(\frac{E-V_t}{E}\right)c}$$

Substituting the correct values in the foregoing equation we have

$$R=R_3=\frac{-.01}{\left[\log \epsilon\left(\frac{12-10}{12}\right)\right]\frac{.5}{1000000}}$$

$$=\frac{-.01}{\left(\log \epsilon \frac{1}{6}\right).5\times 10^{-6}}$$

$$=7070 \text{ ohms.}$$

The proper resistance to use for R^3 is then found to be 7070 ohms. At the end of .01 of a second after the key is opened 10 volts biasing grid potential has been added to the original biasing "C" battery shown as B_1 in Fig. 2. The combined "C" potential is now sufficient to throw the grid of tube P so far negative that all plate current is practically stopped and it ceases to function as a transmitter or amplifier. This effect is shown in Fig. 1, and also the time required for the plate current to diminish to zero. Starting at the point marked "key open" the oscillation can be seen to gradually die out to zero as the potential builds up across the condenser C_1.

The voltage discharge transient of the condenser C_1 starts at the instant the key is closed and may be calculated from the following formula

$$V_t=V\epsilon^{\frac{-t}{RC}} \quad (3)$$

in which the previous values may be substituted.

V_t=voltage of condenser C_1 at a time t 2 volts.

t=time in seconds required for voltage to drop to 2.

V=voltage charge on condenser at instant of closing key=12 volts.

R=7070 ohms.

C=.5 microfarads.

From the above formula

$$t=\log\left(\frac{V_t}{V}\right)(-RC)$$

substituting

$t=-1.221\times 7070\times .5\times 10^{-6}$

=.00434 second, required for voltage on condenser C_1 to drop to 2 volts.

It will be noticed by referring to Fig. 1 that when the voltage across the condenser C_1 is least the amplitude of the oscillations is maximum and when the voltage across the condenser C_1 is maximum the oscillations are minimum. If the polarity of the battery B_2 is reversed the effect on amplitude of the oscillations is also reversed. In the calculations the potential of the customary grid biasing battery was neglected. This is permissible because the potential of B_1 is not altered by opening or closing the key. The true voltage on the condenser at any time is the direct sum of the steady voltage of B_1 and the transient voltage across the condenser C_1 when the polarities of B_1 and B_2 are in the same direction and the direct difference when they are in opposite directions.

In Fig. 1, the curve (*a*) shows an oscillographic record of a "dot" signal when resistance R_3 is reduced to zero, and curve (*b*) shows the same signal when R_3 is 1000 ohms. The "key thump" disturbances are clearly shown in curve (*a*), while they are not to be found in curve (*b*). The wave in curve (*b*) rises gradually and smoothly to maximum value.

An inductance in series with a resistance may be substituted for R_3 in Fig. 2. In that case the transient will be changed according to the values used; that is, the rate of charge and discharge of the condenser C_1 will be changed according to the values of the units selected, but the action on the transient voltage across the condenser C_1 will function the same as in the case previously described. Fig. 4 illustrates this arrangement. Actual values may be calculated from well known formulas.

The main feature of this keying scheme is that single frequencies or a combination of multiple frequencies may be transmitted through the tube P and the rate of rise and fall of the envelope of these frequencies regulated without causing distortion to these oscillations by the regulating means; or disturbance in the oscillating or tuned circuits by the addition of these keying means.

When the frequency of the oscillations is sufficiently removed from the keying transient the inductance L may be inserted as shown in Fig. 4, when L will have a double function. Firstly, it will act as a choke and prevent the oscillations passing through the resistances R_2 and R_3 to ground and, secondly, act as one of the controlling elements in the transient voltage across condenser C_1. Likewise, several combinations of inductance, capacity and resistance may be substituted in the place of R_3 of Fig. 2 without departing from the main features of this scheme. Also, different combinations of inductance, capacity and resistance may be substituted in place of condenser C_1 without departing from this scheme.

My keying arrangement may be directly applied to an oscillating tube system to start and stop the oscillations of the tube generator and control the transient or envelope of the transmitted or generated wave according to predetermined constants. This keying scheme is especially applicable to radio transmission systems to remove the so-called "key thump" from the transmitted signals. When applied to transmitting systems it accomplishes a sharper transmitted wave of the carrier frequency and a more pleasing and un-

derstandable signal. Also, because of the sharp transmitted wave, less interference is caused in radio receiving systems operating on adjacent carrier frequencies. Fig. 5 shows how it may be applied directly to an oscillating transmitter. This is a conventional drawing and needs no further description.

In installations where two or a number of simultaneous carrier frequencies are used, such as in multiple frequency carrier telegraphy, it would be more convenient to use one common battery or generator to furnish the "C" biasing and keying battery for the several transmitters. Fig. 6 shows two transmitters being supplied from common battery. More transmitters may be supplied by carrying out the same scheme of connections on the additional transmitters as shown in the figure.

I claim:

1. A signal transmission system comprising an electric discharge relay having a cathode, an anode and a control electrode, a source of space current for said relay, an input circuit, a source of carrier waves to be repeated connected to the input circuit, a source of biasing potential for normally biasing the control electrode at such potential that the carrier waves are not effectively repeated by the relay, means for abruptly changing the potential of the biasing source in accordance with telegraphic signals to render said relay operative, and means for gradually changing the potential of the control electrode in response to the abrupt changes of the biasing source voltage.

2. A signal transmission system comprising an electric discharge relay having a cathode, an anode and a control electrode, a source of space current for said relay, an input circuit, a source of carrier waves to be repeated connected to the input circuit, a source of biasing potential for normally biasing the control electrode at such potential that the carrier waves are not effectively repeated by the relay, said source of biasing potential including an energy storing device and a source of electric energy for charging the same, means for abruptly changing the potential of the source of electric energy, and means for controlling the rate of charge and discharge of said storage device to prevent abrupt changes in the potential of the control electrode.

3. A signal transmission system comprising a thermionic relay having a cathode, an anode and a control electrode, an output circuit for the relay including a source of space current, an input circuit connected between the cathode and the control electrode and including a condenser, a source of biasing potential connected in shunt to said condenser, means in said shunt and associated with said source of biasing potential for changing the voltage of said source in accordance with telegraphic signals, and a resistance connected in said shunt path in series with said source.

4. A signal transmission system comprising a thermionic relay having a cathode, an anode and a control electrode, an output circuit for the relay including a source of space current, an input circuit connected between the cathode and the control electrode and including a condenser, a source of biasing potential connected in shunt to said condenser, means associated with said source of biasing potential for changing the voltage of said source in accordance with telegraphic signals, and a resistance and a choke coil connected in said shunt path in series with the source of biasing potential.

5. A signal transmission system comprising an electric discharge relay having a cathode, an anode and a control electrode, an output circuit for the relay including a source of space current, an input circuit connected between the cathode and the control electrode including a condenser, a path in shunt to said condenser including a biasing battery and a resistance connected in series, means for producing a voltage drop across said resistance including a second battery and a second resistance connected in series across said first resistance, and means for short-circuiting said first resistance in accordance with telegraphic signals.

6. A signal transmission system comprising an electric discharge relay having a cathode, an anode and a control electrode, an output circuit for relay including a source of space current, an input circuit connected between the cathode and the control electrode including a condenser, a path in shunt to said condenser including a biasing battery and a resistance connected in series, means for producing a voltage drop across a portion of said resistance, and means for short-circuiting said portion of said resistance in accordance with telegraphic signals.

7. A signal transmission system comprising an electric discharge relay having a cathode, an anode and a control electrode, an output circuit for the relay including a source of space current, an input circuit connected between the cathode and the control electrode including a condenser, a path connected in shunt to said condenser including a biasing battery and two resistances connected in series, means for producing a voltage drop across one of said resistances including a battery and a third resistance connected in series across the terminals of said last mentioned resistance, and means for short-circuiting the energized resistance in accordance with telegraphic signals.

8. A telegraphic signaling system comprising a source of carrier waves, a modulator for said waves including a control circuit, a source of signal impulses connected to said

control circuit, a condenser in shunt to said control circuit and a high resistance in series with said circuit between the condenser and the source of signal impulses.

9. A telegraphic signaling system comprising a source of carrier waves, a modulator for said waves including a control circuit, a source of signal impulses connected to said control circuit, a condenser in shunt to said circuit, and a high resistance and a choke coil in series with said circuit between the condenser and the source of signal impulses.

10. A telegraphic signaling system comprising a source of carrier waves, a modulator for said waves having a control circuit, a source of signal impulses, a translating device, means for discharging the signal impulses through said translating device, means for controlling the rate of discharge of the signals through the translating device, and circuit connection for supplying the control circuit of the modulator with current derived from across the translating device.

11. The method of controlling a modulator in accordance with telegraphic signals which consists in, producing sharp voltage pulses in accordance with the signals, discharging the pulses through a translating device, controlling the rate of discharge to obtain a gradually increasing potential drop across the translating device, and supplying the control circuit of the modulator with current derived from across the translating device.

12. The method of controlling a modulator in accordance with telegraphic signals which consists in, producing sharp voltage pulses in accordance with the signals, charging a condenser with each pulse, controlling the rate of charge to obtain a gradually increasing voltage across said condenser for each pulse, and supplying the control circuit of the modulator with current derived from across the condenser.

In testimony whereof I affix my signature.

WILLIAM G. FLUHARTY.