Aug. 9, 1938. H. C. SMITH 2,126,146

UNDERREAMER

Filed May 29, 1936 2 Sheets-Sheet 1

Fig. 1

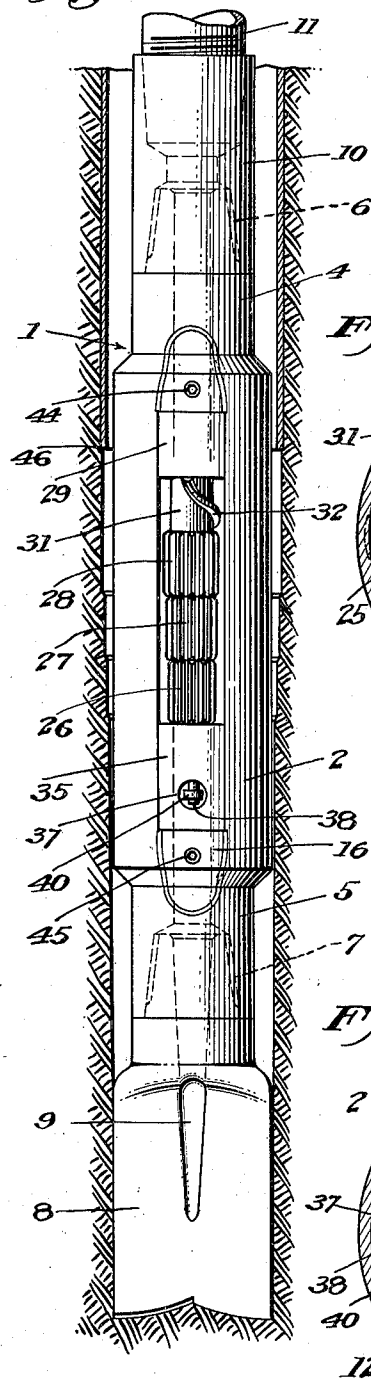

Fig. 4

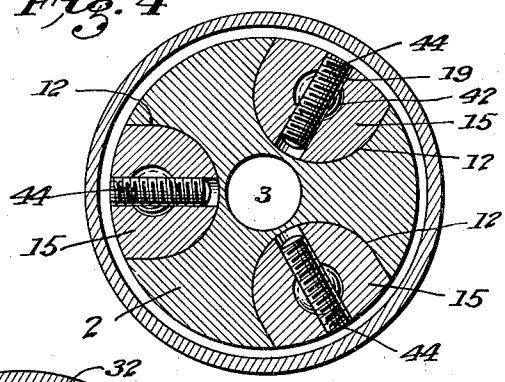

Fig. 5

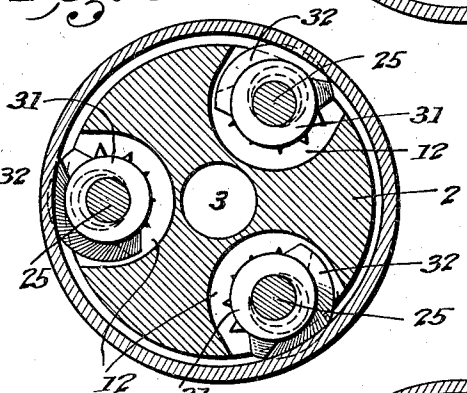

Fig. 6

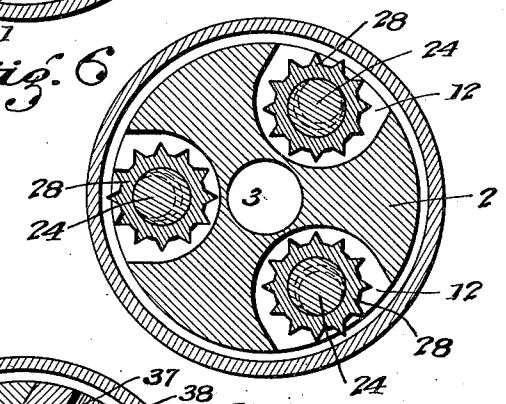

Fig. 7

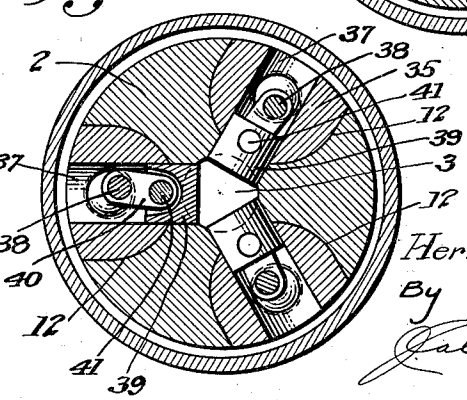

INVENTOR,
Herman C. Smith;
By
Galvin Brown
ATTORNEY.

Aug. 9, 1938. H. C. SMITH 2,126,146

UNDERREAMER

Filed May 29, 1936 2 Sheets-Sheet 2

Fig. 2

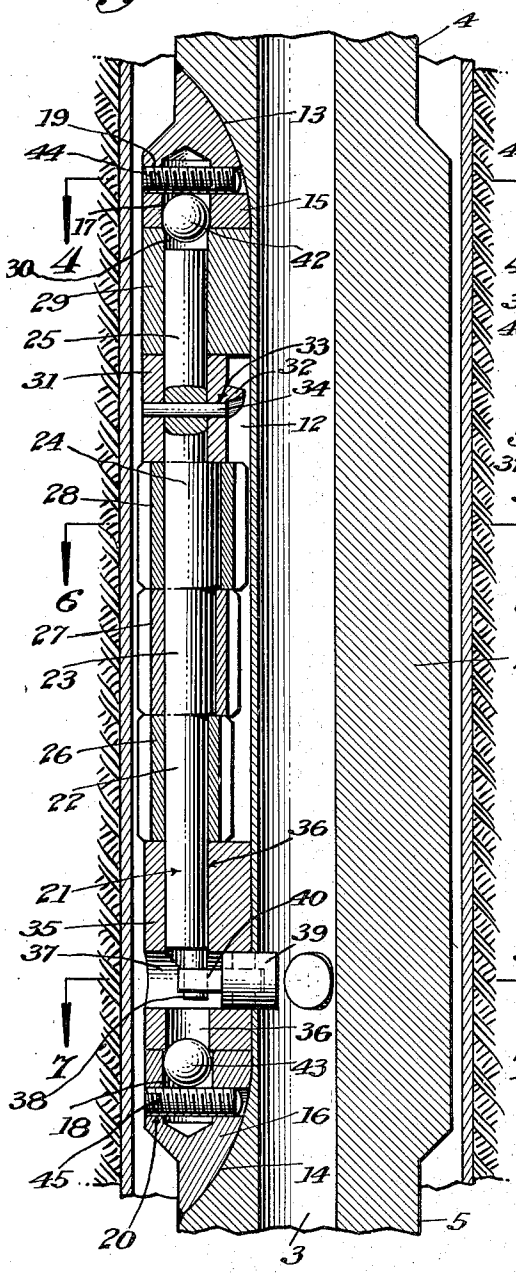

Fig. 3

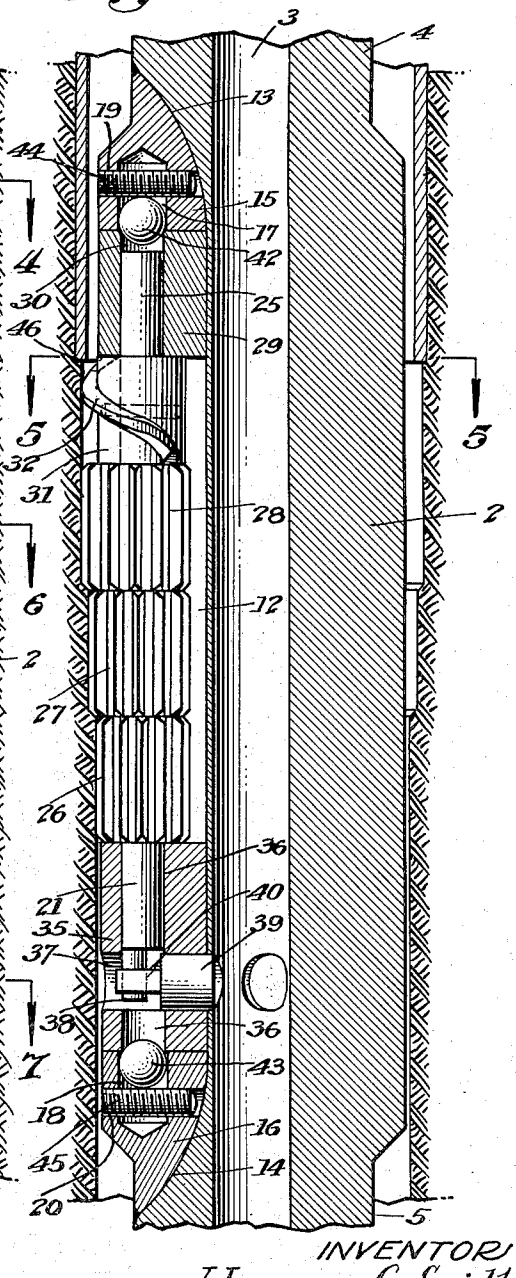

INVENTOR
Herman C. Smith,
By Calvin Brown,
ATTORNEY.

Patented Aug. 9, 1938

2,126,146

UNITED STATES PATENT OFFICE

2,126,146

UNDERREAMER

Herman C. Smith, Los Angeles, Calif.

Application May 29, 1936, Serial No. 82,484

6 Claims. (Cl. 255—74)

This invention relates to underreamers, and particularly to that class of underreamers operated by rotary apparatus.

The use of underreamers in the oil well industry is well understood, particularly where formation is to be cut a size larger than the drilling tool. The necessity for enlarging a well hole results where it is desired to cement back of a casing and also where casing shoes are used which are, of necessity, larger than the drill.

An object of the present invention is to provide an underreamer wherein cutter members are readily collapsed out of casing engagement while the underreamer is being lowered through a casing, and then moved into formation engagement at the will of the operator, the operative control being at the surface of the well hole.

Another object is the provision of an hydraulically controlled underreamer, the hydraulic control being such as to actuate positive mechanical means in turn directing cutter members of said underreamer into formation engagement.

Another object is the provision of an underreamer which may have the cutter elements thereof controlled from the surface of the well, hydraulically, and in such a manner that the diameter of the reamed hole may be varied.

Another object is the provision of an underreamer having few parts, simple of construction, positive in operation, which may be readily assembled and disassembled, which permits any broken parts to be easily removed, and is generally superior to underreamers now known by the inventor.

Another object is the provision of an underreamer not dependent for operation upon the use of springs for expanding the cutters.

Another object is the provision of an underreamer which may be readily passed through a casing without the cutters injuring the casing or in turn the casing injuring the cutters.

Other objects and uses of the invention will readily suggest themselves to those skilled in the art, and with the above set forth objects, including simplicity of structure, inexpensiveness in cost of manufacture, in view, the invention consists in the novel and useful provision, formation, construction, association, and relative arrangement of parts, members and features, all as shown in a certain embodiment in the accompanying drawings, described generally, and more particularly pointed out in the claims.

In the drawings:

Figure 1 is a fragmentary sectional view of a well hole within which is received the improved underreamer, the underreamer cutters being in formation engagement below the well casing,

Figure 2 is an enlarged fragmentary vertical sectional view of the underreamer within well casing,

Figure 3 is an enlarged fragmentary vertical sectional view, the underreamer cutters being below the lowermost end of the casing and in formation engagement,

Figure 4 is a sectional view on the line 4—4 of Figure 2,

Figure 5 is a sectional view on the line 5—5 of Figure 3, and,

Figures 6 and 7 are sectional views on the lines 6—6 and 7—7 of Figure 2.

Referring now with particularity to the drawings, the improved underreamer is designated as an entirety by the numeral 1, and the same includes a body 2 which may be provided with a curved periphery and with a central bore 3 forming a water course. The elongated central portion of the body may be of greater diameter than the end portions 4 and 5. The portion 4 may be formed with a pin, indicated by dotted lines at 6 in Figure 1, and with a box for the end 5, as indicated by dotted lines at 7 in Figure 1. In this manner, the underreamer as an entirety may be suitably secured at one end to a fishtail or other type of bit 8 having ports 9 communicating with the central bore 3 of the body, and the opposite end through the medium of a coupling 10, is secured to drill pipe 11. This drill pipe or string, in turn, communicates with the surface of the well.

The said body is formed with one or more equidistantly spaced troughs opening outwardly of the periphery and, in the present instance, three troughs or grooves are provided, as illustrated in Figures 4 to 7, inclusive. For convenience, a trough will be designated as 12. As is customary in trough formation, the bounding end walls 13 are curved from the bottom 14 of the trough outwardly to the periphery of the body. Fitted within both curved portions 13 and 14 are blocks 15 and 16, the peripheries of which, as shown in Figure 4, are curved to form a continuation of the curved periphery of the body. These blocks are both provided with longitudinal bores 17 and 18 and with transverse screw-threaded bores 19 and 20.

A shaft 21 is provided with portions of different diameters 22, 23 and 24, each portion 23 and 24 being eccentric to the axis of the portion 22. Beyond the portion 24 is a further portion of the shaft 25, the axis of which lies within the axis of the portion 22. Adapted to be mount-

ed upon the eccentric portions are cutter rollers 26, 27 and 28.

A bearing block 29 receives in part the portion 25 of the shaft, this bearing block being provided with a through bore for this purpose, as shown at 30. Interposed between the bearing block 29 and the roller 28 is means 31 comprising a sleeve having on its surface a helical thread 32. This sleeve is transversely bored, as shown at 33, and the portion 25 of the shaft is transversely bored whereby a pin 34 may pass through the bores of the sleeve and of the shaft for securing the said sleeve to the said shaft in such a manner that rotation of said sleeve will produce rotation of the shaft.

Adapted to be interposed between the block 16 and the lowermost cutter roller 26 is a block 35 provided with a longitudinal bore 36 and with a transverse bore 37. The portion 22 of the shaft extends through a portion of the bore 36 and into the bore 37. The end portion of the shaft where it is received within the bore 37 is provided with an eccentric lever 38 forming by this construction a crank. Fitted within the bore 37 is a piston 39 provided with an arm 40 secured to the lever 38. This piston is received in part within the water course 3. The piston arm is swingingly mounted to the piston head in any suitable manner, such as by pinning, as illustrated in Figure 7 at 41.

In order to hold the shaft, cutter rollers, and the like in position of assemblage to the blocks 15 and 16, I have provided balls, as illustrated at 42 and 43. The balls 42 and 43 are placed within the bores 17 and 18, and when the bearing block 29 has its bore 30 in alignment with the bore 17, the ball 42 will span the two bores but the ball will not completely enter the bore 30 for the reason that the bore 30 is of lesser diameter than the bore 17. A screw-threaded pin 44 is then placed in screw-threaded engagement with the bore 19 so that the ball is held in the position shown in Figure 2. The same is true for the lower block in that the ball 43 will, in part, be received within the bores 18 and 36 when a threaded pin 45 is in threaded engagement with the bore 20. In this manner, the several parts are locked within the trough of the body.

The operation, uses and advantages of the invention just described are as follows:

We assume that the underreamer is to be lowered within the well casing, for the purpose of reaming out the hole beneath the casing: The operator at the surface of the well may relieve the mud pressure through the drill string until such time as he desires to underream. Upon forcing mud under pressure through the drill string and the water course 3 of the underreamer body, pressure will be exerted for one operative unit against the piston 39 to force the same inwardly of the bore of the block 35. When this occurs, the shaft 21 will be rotated through the medium of the piston arm connection with the crank arm. As the cutter rollers are eccentrically mounted upon the shaft, rotation of the shaft will move the rollers from completely within the trough to outwardly thereof and beyond the periphery of the body of the underreamer. Viewing Figure 7, it will be observed that the pistons are in such position as to be readily moved by any fluid passed through the course 3 of the body. This figure also illustrates the fact that the piston arms are so secured to the cranks of the shafts as to never be on dead center. When it is desired to come out of the well hole, the lowermost end of the casing, as shown at 46 in Figure 3, will engage the spiral thread 32 and rotate the sleeve 31. This rotation of the sleeve will rotate the shaft due to the pin connection 34 between the shaft and the sleeve, and restore the cutter rollers within the trough, and out of casing engagement.

I have thus provided a device which does not depend upon springs for moving the cutters and one which may be readily assembled or disassembled, and to replace cutters which have been damaged.

I claim:

1. In an underreamer construction, a body formed with a central bore through which fluid is adapted to be passed, a rotatable shaft having a portion eccentric to its axis of rotation, an underreamer cutter mounted on the eccentric portion and adapted to be maintained within the body or projected beyond the periphery of said body due to said mounting when the shaft is rotated, and means connected to said shaft and exposed to the path of flow through said central bore to rotate said shaft.

2. In an underreamer construction, a body formed with a central bore through which fluid is adapted to be passed, a rotatable shaft having a portion eccentric to its axis of rotation, an underreamer cutter mounted on the eccentric portion and adapted to be maintained within the body or projected beyond the periphery of said body due to said mounting when the shaft is rotated, and a piston eccentrically secured to said shaft and in part positioned in the path of fluid flow through the central bore of said body.

3. In an underreamer construction, a body formed with a central bore through which fluid is adapted to be passed, a rotatable shaft having a portion eccentric to its axis of rotation, an underreamer cutter mounted on the eccentric portion and adapted to be maintained within the body or projected beyond the periphery of said body due to said mounting when the shaft is rotated, means connected to said shaft and exposed to the path of flow through said central bore for rotating said shaft to project said underreamer cutter outwardly beyond the periphery of said body, and means for rotating said shaft to retract said projected cutter within the periphery of said body.

4. In an underreamer construction, a body formed with a central bore through which fluid is adapted to be passed, a rotatable shaft having a portion eccentric to its axis of rotation, an underreamer cutter mounted on the eccentric portion, and adapted to be maintained within the body or projected beyond the periphery of said body due to said mounting when the shaft is rotated, means connected to said shaft and exposed to the path of flow through said central bore for rotating said shaft to project said underreamer cutter outwardly beyond the periphery of said body, and a sleeve on said shaft formed with a spiral thread for engaging the lower end of the well casing, when said body is elevated in the well, for rotating said shaft to retract said underreamer cutter within the periphery of said body.

5. In an underreamer construction, a body formed with a central bore through which fluid is adapted to be passed, a rotatable shaft having a portion eccentric to its axis of rotation, an underreamer cutter mounted on the eccentric portion, and adapted to be maintained within

the body or projected beyond the periphery of said body due to said mounting when the shaft is rotated, means connected to said shaft and exposed to the path of flow through said central bore for rotating said shaft to project said underreamer cutter outwardly beyond the periphery of said body, and means for engaging the lower end of the well casing, when said body is elevated in the well, for rotating said shaft to retract said underreamer cutter within the periphery of said body.

6. In an underreamer construction, a body formed with a groove in its periphery, a block secured in each end of said groove, a ball fitted in a bore in each of said blocks, bearing blocks fitted in said groove adjacent said first blocks, respectively, each of said bearing blocks being provided with a bore of smaller diameter than the ball, in the block adjacent said bearing block, to receive a part of said ball, to lock said bearing blocks in position in said groove, means for detachably holding said balls in locking position in said blocks, a shaft having a portion eccentric to its axis of rotation journaled in said bearing blocks, an underreamer cutter mounted on the eccentric portion of said shaft, means for rotating said shaft to project said cutter beyond the periphery of said body into underreaming position, and means for rotating said shaft, when said body is elevated, to retract said cutter within the periphery of said body.

HERMAN C. SMITH.