(No Model.)

4 Sheets—Sheet 1.

E. F. SPAULDING.

CASH REGISTER.

No. 590,344. Patented Sept. 21, 1897.

Fig. 1.

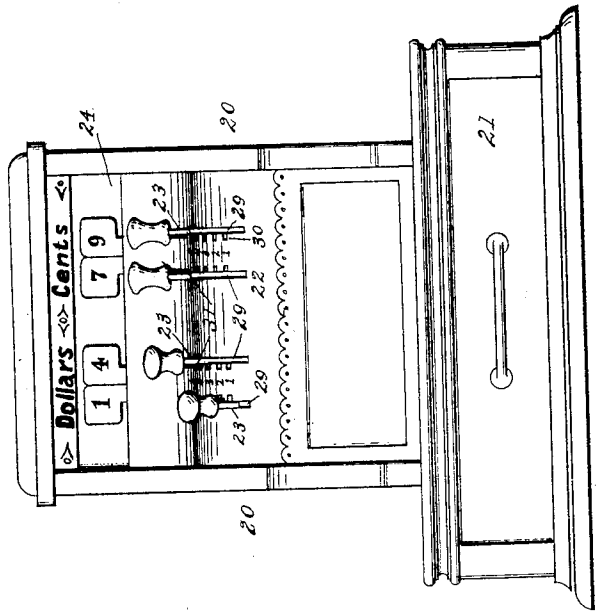

Fig. 2.

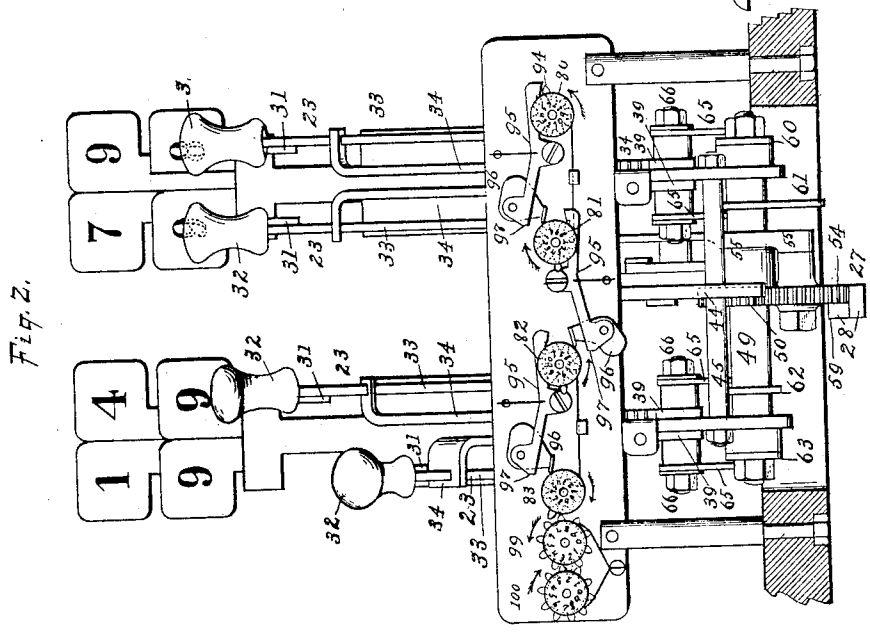

WITNESSES:

E. Jos. Belknap.

Edwin J. Cairns

INVENTOR

Elijah F. Spaulding,

BY

Chas. C. Gill

ATTORNEY.

THE NORRIS PETERS CO., PHOTO-LITHO., WASHINGTON, D. C.

(No Model.) 4 Sheets—Sheet 2.

E. F. SPAULDING.

CASH REGISTER.

No. 590,344. Patented Sept. 21, 1897.

Fig. 4.

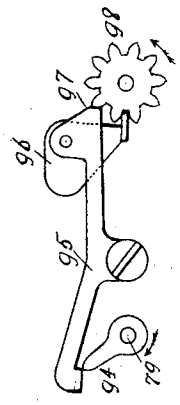

Fig. 3.

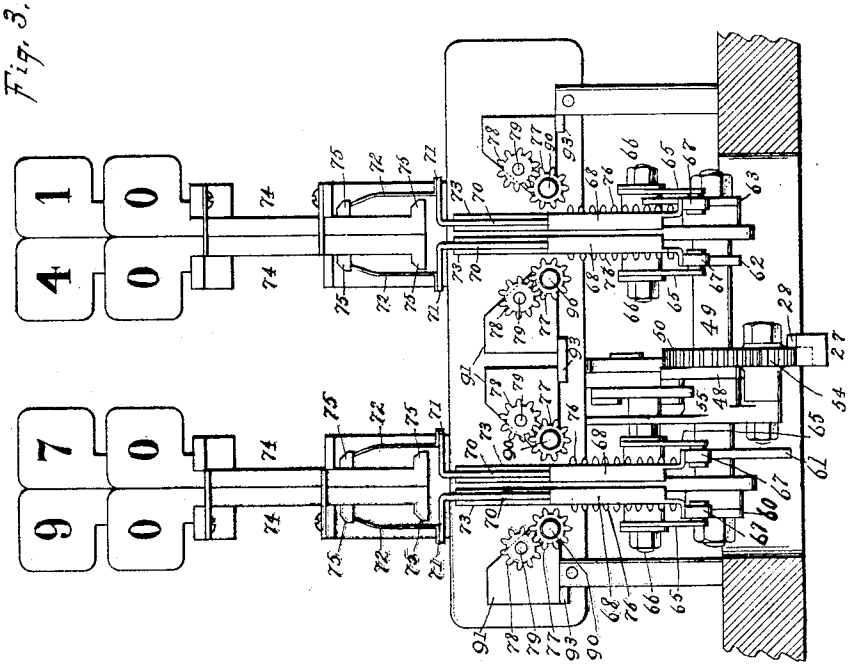

WITNESSES:

E. Jos. Belknap.

Edwin T. Lacey

INVENTOR

Elijah F. Spaulding,

BY

Chas. C. Gill

" ATTORNEY.

THE NORRIS PETERS CO., PHOTO-LITHO., WASHINGTON, D. C.

(No Model.) 4 Sheets—Sheet 3.

E. F. SPAULDING.

CASH REGISTER.

No. 590,344. Patented Sept. 21, 1897.

Fig. 5.

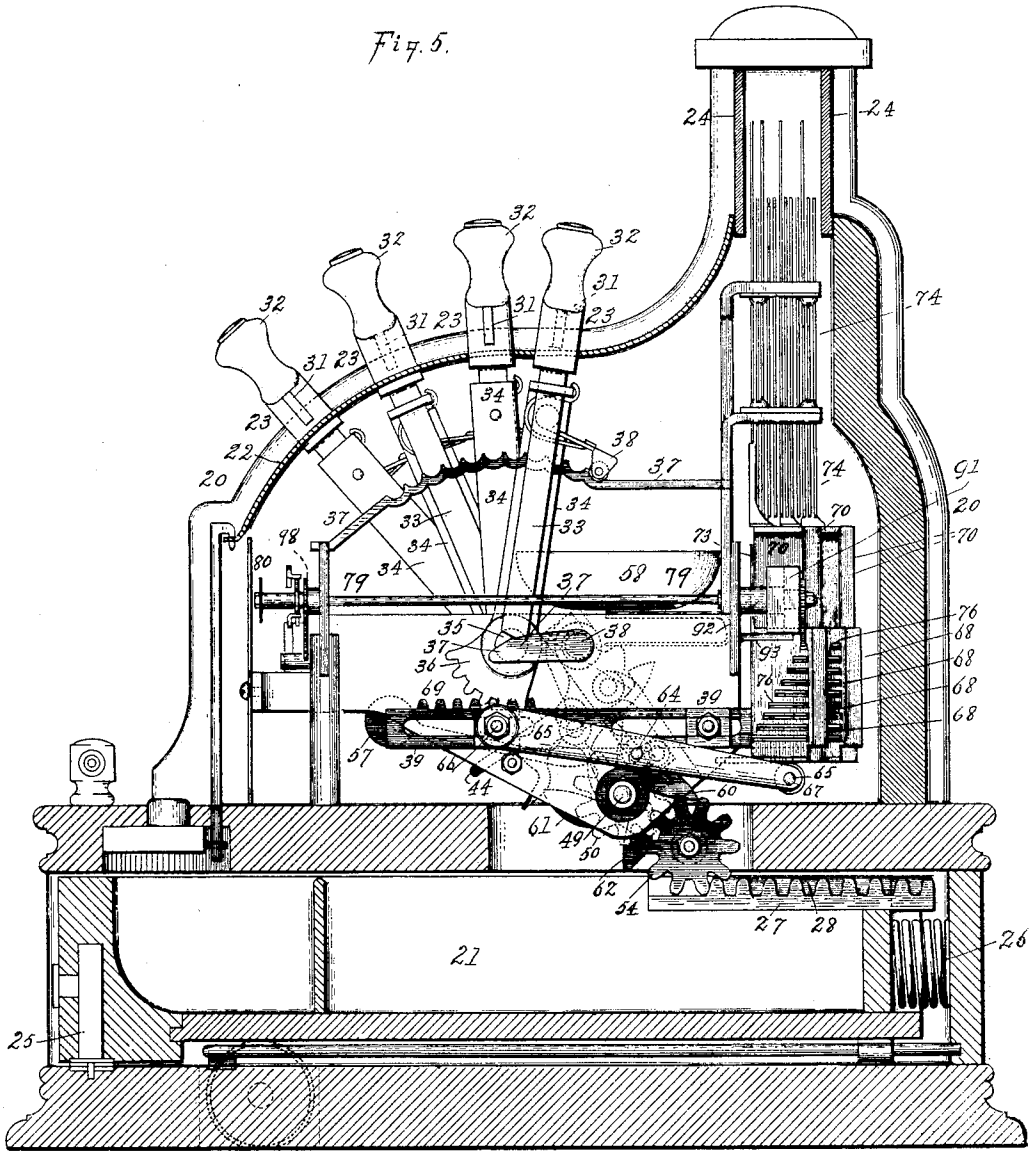

WITNESSES:

E. Jos. Belknap.

Edwin T. Collins.

INVENTOR

Elijah F. Spaulding,

BY

Chas. C. Gill

" ATTORNEY.

THE NORRIS PETERS CO., PHOTO-LITHO., WASHINGTON, D. C.

(No Model.) 4 Sheets—Sheet 4.

E. F. SPAULDING.

CASH REGISTER.

No. 590,344. Patented Sept. 21, 1897.

Fig. 6.

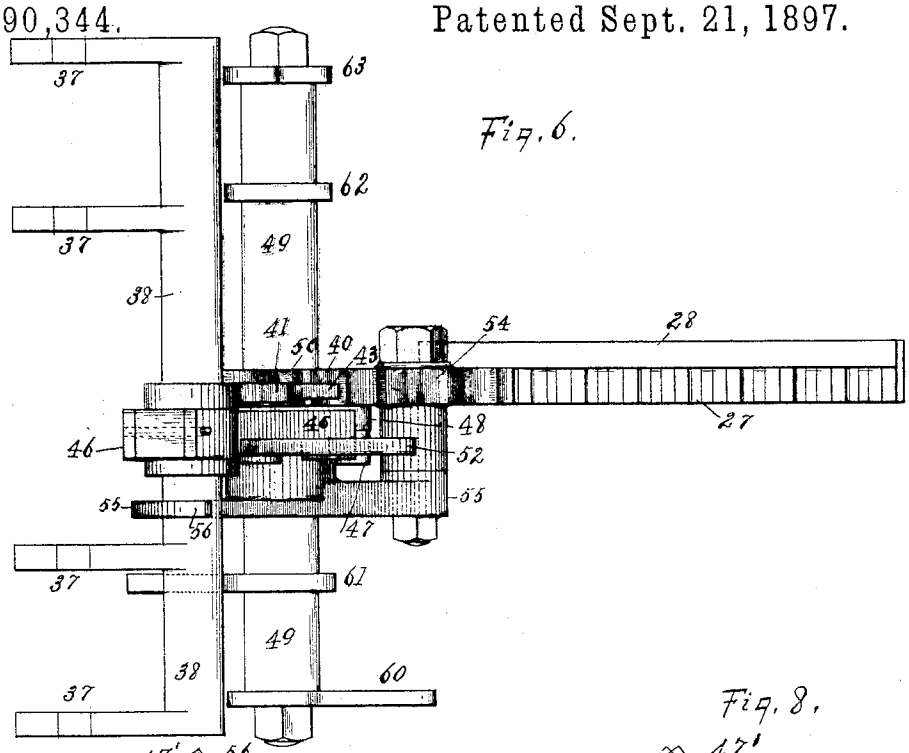

Fig. 8.

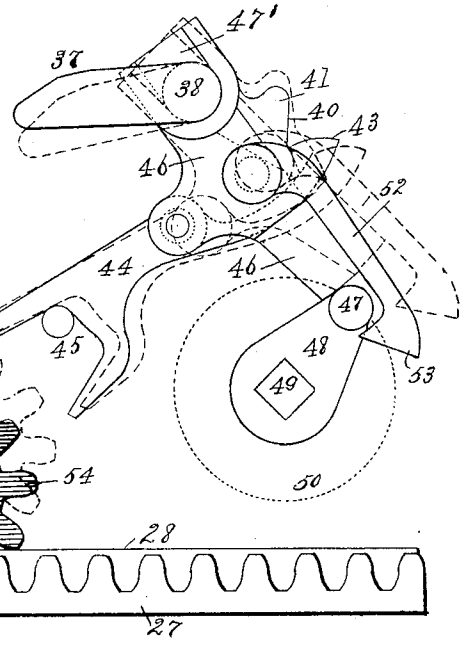

Fig. 9.

Fig. 7.

WITNESSES:

E. Jos. Belknap.

Edmund T. Eacuns

INVENTOR

Elijah F. Spaulding,

BY

Chas. C. Gill

" ATTORNEY.

THE NORRIS PETERS CO., PHOTO-LITHO., WASHINGTON, D. C.

UNITED STATES PATENT OFFICE.

ELIJAH F. SPAULDING, OF BOUND BROOK, NEW JERSEY.

CASH-REGISTER.

SPECIFICATION forming part of Letters Patent No. 590,344, dated September 21, 1897.

Application filed March 31, 1897. Serial No. 630,055. (No model.)

To all whom it may concern:

Be it known that I, ELIJAH F. SPAULDING, a citizen of the United States, and a resident of Bound Brook, in the county of Somerset and State of New Jersey, have invented certain new and useful Improvements in Cash-Registers, of which the following is a specification.

The invention relates to improvements in cash-registers; and it consists in the novel features, structure, and combinations of parts hereinafter described and claimed.

In accordance with my present invention the operator moves the exposed actuating-levers along the lines of numerals provided upon the front face of the register-casing for the purpose of moving certain interior plates or boxes into proper operative relation to the registering mechanism and to the tablets bearing the numerals at which the actuating-levers were arrested in their movement, and thereafter the operator by moving the actuating-levers inward sets in motion certain parts which free a spring and enable the latter to open the cash-drawer when desired, but more particularly to actuate certain levers by which the said plates or boxes then in position are caused to expose the proper tablets and to effect the proper action of the registering-dials. The oscillating movement of the hand-levers performs no other function than to set the interior parts of the mechanism for the further operation performed by the spring and the parts the said spring actuates, and this spring is only permitted to act after the hand-levers have been brought to rest and one or more of them shall have been manually driven inward for the express purpose of relieving the spring and the mechanism it actuates from restraint.

The nature of the invention and a satisfactory means by which the invention may be carried into effect are described in full hereinafter and are illustrated in the accompanying drawings, forming a part of this application.

Referring to the accompanying drawings, Figure 1 is a front elevation of a machine constructed in accordance with and embodying the invention. Fig. 2 is a front elevation, partly in section, of same, the casing inclosing the operative mechanism being omitted and the cash-drawer being removed. Fig. 3 is a like view of same, looking at the rear of the machine. Fig. 4 is an enlarged detached view of a portion of the registering mechanism. Fig. 5 is a central vertical longitudinal section through the casing of the machine, the interior mechanism being illustrated in side elevation. Fig. 6 is a top view of certain detached portions of the interior mechanism of the machine and of the toothed rack connected with the cash-drawer, which is omitted from this figure. Fig. 7 is an enlarged detached side elevation of that portion of the interior mechanism illustrated in Fig. 6, this figure by full lines illustrating the position of the parts when the cash-drawer is in its closed position and by dotted lines the position of said parts when the cash-drawer is freed from its locking means. Fig. 8 is a detached view of certain parts of the interior mechanism shown in Fig. 7, the shading being omitted and said parts being illustrated in their two positions by full and dotted lines, respectively. Fig. 9 is a detached edge view of the gear-wheel which engages the rack connected with the cash-drawer.

In the drawings, 20 designates a suitable exterior casing for the machine, 21 the cash-drawer, and 22 a front curved inclosing metal plate, upon which, as indicated in Fig. 1, will be applied the numerals by which to direct the attendant in moving the oscillatory operative levers 23. At the upper part of the casing 20 will preferably be applied the transparent panels 24, through which the indicating-tablets may be read by a purchaser. The cash-drawer 21 will be provided with a usual lock 25 at its front end and with a spring 26 at its rear end, by which at the proper time the said drawer 21 may be automatically projected to its open position. The cash-drawer 21 is provided at about its upper longitudinal center with the toothed rack 27, having at one edge the flat tramway 28, as more clearly indicated in Figs. 6 and 7. The front plate 22 of the casing 20 is provided with the slots 29, through which the levers 23 pass, and at one edge of these slots 29 are formed the serrations 30 in line with the ribs 31, formed upon the exposed portions of the levers 23. The levers 23 when moved to their proper position with respect to the scale of figures indicated on the plate 22 are slightly depressed

in order to free the cash-drawer 21 and permit the spring 26 to open the latter, and hence the serrations 30 will be in line with the numerals on said plate 22 in order that upon the depression of the levers 23 the ribs 31 may enter said serrations 30. The purpose of the serrations 30 and ribs 31 is to prevent the levers 23 from being carelessly depressed during the upward movement of said levers or at points removed from the numerals on the plate 22. During the usual rapid upward movement of the levers 23 the ribs 31 will slide over the top of the serrations 30, whereas without said serrations 30 and said ribs 31 an operator might carelessly depress the levers 23, while not intending to do so. Any desired number of levers 23 will be employed in accordance with the purpose for which the cash-register is to be used.

The levers 23 comprise handles 32 and the blades or shanks 33, which pass downward through slots formed in the upper bent ends of the plates 34, which are mounted upon the shaft or shafts 35 and carry upon their lower ends the segmental toothed racks 36, and the shanks or blades 33 of said levers 23 rest at their lower ends upon the arms 37, connected with the transverse shaft 38. All of the arms 37 are upon the one shaft 38, while each of the plates 34 is provided with an independent segmental rack 36, and hence it will appear obvious that each lever 23 when moved is capable of causing its own rack 36 to operate the parts connected therewith, while not operating any of the parts connected with the segmental racks 36 of the other levers 23. It is intended that the rock-shaft 38, carrying the lever-arms 37, shall be operated by the depression of any one of the levers 23, and hence all of said arms 37 are on the shaft 38 and each of the levers 23 rests at its lower end upon one of said arms 37. The lower ends of the levers 23 rest loosely upon the arms 37, and said levers are not depressed upon said arms to operate the shaft 38 until they (said levers) have been elevated along the indexes to the proper position to indicate the amount of a sale.

The segmental racks 36 are utilized in connection with the mechanism for registering the amount of the sale and exposing the proper tablets, while the arms 37 on the rock-shaft 38 are utilized to free the cash-drawer 21 in order that the latter may be projected outward by the spring 26. The plates 34, while separate from the shanks 33 of the levers 23, constitute, in effect, a portion of said levers 23, and said plates 34 and levers 23 are in separate pieces in order that the levers may not only operate the racks 36, but perform the independent function of depressing the arms 37 and thereby driving the shaft 38 and operating the mechanism connected with said shaft. Within the casing 20 is provided a toothed rack 37′ to engage a spring-pawl or spring-pressed roller 38′, connected with the plates 34 in order that a certain resistance may be afforded to the said levers 23 and to aid the operator in arresting said levers 23 at the desired points.

I will first describe the mechanism which is operated from the shaft 38 by the depression of the levers 23 upon the arms 37, it being remembered that the levers 23 are not depressed upon said arms 37 until said levers have been moved along the slots 29 to a proper position to indicate the amount of the sale, and thereafter I will describe the mechanism connected with the exposure of the tablets and the registering of the sales, operated by the movement of said levers in carrying the racks 36 against the slides 39.

The only feature of the mechanism which in addition to the arms 37 is rigid on the rock-shaft 38 is a pawl-arm 40, which has projections 41 at its upper portion in rear of said shaft 38 to receive the pressure of a small spring 42. The arms 37 when depressed by the levers 23 rock the shaft 38 toward the front of the machine, and this throws the arm 40 upward a short distance. When the pressure of the hand is relieved from the lever 23, the spring 42, pressing upon the arm 40, will return the latter to its normal position and elevate the arms 37 to their normal position. The end of the arm 40, as indicated by dotted lines in Fig. 7, is adapted to engage the head 43, formed at the upper end of the pivoted arm 44, whose lower end is bifurcated to straddle the rod 45 and to ride on said rod, as indicated by the full and dotted lines, respectively, in Fig. 8. The arm 44 is loosely pivoted and has no spring action and yields to the upward movement of the arm 40 when the latter is actuated by depressing the levers 23 upon the arms 37, connected with the shaft 38. The arm 44 is pivoted to the plate 46, which is hung by a strap or other suitable means 47′ from the shaft 38, and said plate 46 is free to oscillate from said shaft without acting to move said shaft. The plate 46 carries the arm 44, and the arm 40 on the shaft 38 while moving upward will, before leaving the head 43, pull the arm 44 with it for a definite distance and then pass from said head 43. During the upward movement of the arm 44 with the arm 40 the said arm 44 being pivoted to the plate 46 will carry the latter plate with it, and when the arm 40 finally leaves the head 43 the said arm 44 and plate 46 will fall back to their former position. (Illustrated in Fig. 7.) The lower end of the plate 46 terminates in position to act as a stop for the pin or stud 47, (see Figs. 7 and 8,) which is upon a crank-arm 48, connected with the shaft 49 of the gear-wheel 50 in order to prevent said gear-wheel from turning upward and toward the left in the line of the circle indicated in Fig. 7 by the dotted line 51.

When the plate 46 is in the position shown in Fig. 7, it will be impossible for the gear-wheel 50 to rotate in the direction of the said line 51, and at such time the said gear-wheel 50 is prevented also from turning in a reverse

direction from the fact that the plate 46 also carries the arm 52, having a head 53, which is in position to act as a stop for the lower side of the stud 47, above referred to as being secured to the crank-arm 48. Thus when the parts are in the position in which they are illustrated in Fig. 7 the wheel 50 is locked against rotation in either direction, and the purpose of thus locking the wheel 50 against rotation is to afford a means for locking the cash-drawer 21 at its inward position, as shown in Fig. 5. The gear-wheel 50 is in mesh with the gear-wheel 54, which is mounted at the lower end of the pivoted plate 55, and when at its lower position is in engagement with the rack 27, secured to the cash-drawer 21. The plate 55 is swung from the shaft 49 and has at its upper end the hook 56, adapted to pass upon the front portion of the shaft 38 and to find a bearing on said shaft. When the cash-drawer is being shoved into the casing 20, the plate 55 will permit the gear-wheel 54 to elevate to the position in which it is shown by dotted lines in Fig. 7; but when the cash-drawer has reached entirely home and the gear-wheel 54 has fallen to its proper position behind the rack 27, as shown by full lines in Fig. 7, the pressure of the rack 27 will then be at the rear side of said wheel 54, and the hook 56 and shaft 38 will then prevent the rack 27 from driving the wheel 54 downward below its normal position or downward to such position that said wheel would bind and probably not operate satisfactorily. The gear-wheel 50 has no oscillating motion and its shaft is stationary, while the gear-wheel 54 is mounted upon a shaft which has an oscillating motion with the plate 55 in the line of the arc of a circle around said gear-wheel 50. The plate 55 thus permits the gear-wheel 54 to have an oscillating motion when necessary, and prevents said gear-wheel 54 from falling below its normal position, and also performs the further duty of supporting the bell-hammer 57, which is pivoted thereto and which is operated upon the opening of the drawer 21 by the contact of the stud 47 with its lower square end normally in the path of said stud.

The operation of the parts illustrated in Figs. 6, 7, and 8 may now be explained, it being understood that said parts are in their normal position (illustrated by full lines in Fig. 7) and that the cash-drawer is at its inward position, as shown in Fig. 5.

Upon a sale having been made the operator will move any one or more of the levers 23 to the proper position along the slots 29 to indicate the amount of the sale, and thereupon the last lever moved upward along its slot 29 will be slightly pressed inward by the operator against the arm 37 of the rock-shaft 38. This depression of the lever 23 will move the arm 37 downward and turn the shaft 38 upward and toward the front, whereby the arm 40, connected with said shaft 38, will be moved upward and through the head 43 of the arm 44 will pull the plate 46 with it, thereby freeing the lower end of said plate 46 and the head 53 of the arm 52 from the path of the stud 47 on the crank-arm 48. This movement of the plate 46 and arm 52 leaves the gear-wheel 50 and crank-arm 48 in position to rotate, and said gear-wheel 50 being thus freed from restraint the spring 26 will drive the cash-drawer 21 outward and cause the rack 27, carried by said cash-drawer, to rotate the gear-wheel 54, which will effect the rotation of the gear-wheel 50 and crank-arm 48 and cause the stud 47 to strike the heel of the bell-hammer 57 and sound the gong 58. The cash-drawer being thus opened will receive the money and the operator may make change if necessary therefrom. When the cash-drawer has opened, the plate 46, arm 54, arm 44, and arm 40 will be returned to their normal position (shown by full lines in Fig. 7) partly by their own specific gravity and partly by the pressure of the spring 42, which, acting on the said arm 40, will restore the shaft 38 and its arms 37 to their normal position. Thus it will appear plain that the cash-drawer is automatically projected outward, due to the depression of a lever 23 upon one of the arms 37 of the rock-shaft 38, and that when said drawer 21 is at its inward position it will there be locked by the plate 46 and arm 52 engaging the opposite edges of the stud 47 on the crank-arm 48, the plate 46 and arm 52 holding the gear-wheel 50 against rotation under the action of the spring 26, rack 27, and gear-wheel 54. The rack 27 has along one side, as above described, the tramway 28, and the gear-wheel 54, as shown more clearly in Fig. 9, has at one point the tooth 59 of increased width and provided for the purpose of riding on the tramway 28 during the return of the cash-drawer to its inward position. When the cash-drawer is pushed inward the tramway 28 will meet the widened tooth 59 of the gear-wheel 54 and elevate said gear-wheel to the position shown by dotted lines in Fig. 7, the teeth of the rack 27 thus being prevented from engaging the teeth of the gear-wheel 54. When the cash-drawer 21 has reached its extreme inward position the widened tooth 57 of the gear-wheel 54 will pass from the end of the tramway 28 and permit the gear-wheel 54 to fall to its normal position with its teeth in engagement with the rack 27.

While the mechanism last above described pertains particularly to means for locking the cash-drawer in its inward position and permitting said drawer to be projected outward by its spring 26 upon the depression of any one of the levers 23, a part of said mechanism is utilized to operate with other features in effecting the exposure of the proper tablets and the registering of the amount of the sale. The outward movement of the cash-drawer 21 revolves the gear-wheel 54 and through said gear-wheel the gear-wheel 50 with the shaft 49, upon which said gear-wheel is mounted,

The motion of the shaft 49, upon which the gear-wheel 50 is mounted, is utilized in the structure presented in this application to elevate the proper tablets and set the registering-wheels in proper motion. Upon the shaft 49 are rigidly affixed at different angles the lever-arms 60, 61, 62, and 63, and each of these lever-arms is directly below a small friction-wheel 64, carried by the arms 65, whose front ends are pivotally mounted upon stationary studs 66 and whose rear ends carry rollers 67, adapted to be moved upward against the lower ends of the boxes 68, said boxes being adapted to have a vertical movement and to be driven upward by said arms 65 when the rear portions of the latter are pressed upward by the arms 60 to 63, inclusive. The arms 60 to 63, inclusive, are at different angles, so that they will never under any circumstances operate all of the registering-dials hereinafter described simultaneously, the objection to said dials all turning together being that the proper carrying from one dial to another would thereby at times be defeated. The arms 65 have no sliding movement, but simply an oscillating motion, upon their securing-studs 66, their upward movement being solely accomplished by the arms 60 to 63, inclusive, on the shaft 49, and their downward movement being due to their own weight when said arms on the shaft 49 pass from contact therewith. In the present instance there are four of the boxes 68, and each box is independently actuated by one of the levers 65, four of the latter being furnished and all corresponding with one another and one being for each box 68. The boxes 68 are adapted to have a vertical movement and also a sliding or lateral frontward-and-backward movement. The vertical movement of the boxes 68 is wholly accomplished by the pivoted arms 65 and the arms secured to the shaft 49 and engaging said arms 65. The forward-and-backward sliding movement of the boxes 68 is accomplished wholly by means of the slides 39, which are formed with the rack-teeth 69 in engagement with the segmental racks 36, hereinbefore described as being operated solely by hand and by means of the hand-levers 23.

In Fig. 5 it will be observed that the slide 39 is slotted and that the stud 66 passes through one of the slots in said slide 39. The stud 66 is, however, stationary and simply guides the slide 39, but does not move with said slide. Each box 68 is connected with a slide 39 and one slide 39 is provided for each of the levers 23. The upward movement of the lever 23 moves the slide 39 frontward, and the latter, being connected with one of the boxes 68, will pull said box frontward, and this is all accomplished prior to the depression of the lever 23, which frees the cash-drawer and permits the same to be projected outward and at the same time effect that rotation of the shaft 49 which will cause one of the arms 60 to 63 to elevate the pivoted arm 65 and thereby elevate the box 68. The purpose of thus through the racks 36 and 69 pulling the box 68 frontward in accordance with the exact position at which the lever 23 is arrested along its slot 29 is to enable the arm 65 and box 68 upon their elevation during the opening of the cash-drawer to effect the exposure of the proper tablet and the registering of the proper amount.

The slide 39 is of an L shape, and its rear vertical portion (numbered 70) is within and forms a guide for the box 68, as indicated more clearly in Fig. 3. The upper ends of the vertical portions 70 of the slides 39 bend outward to form shelves 71, (see Fig. 3,) upon which are secured the small springs 72, which are utilized to support the elevated tablets, but not to elevate said tablets. The boxes 68 at their front edges have the standards 73, which are narrow in width and substantially correspond with the thickness of the tablet-rods 74, and said standards 73 when the boxes 68 are elevated will come into contact with the lower end of the proper tablet-rod and elevate the tablet to a position in which one of the springs 72 may pass below its outer bent lower end and support the same, while the box 68 returns to its lower position. The frontward-and-backward movement of the box 68 under the action of the slide 39 brings the standard 73 of said box into proper position below the proper tablet-rod, and then when said box is driven upward from the shaft 49 by means of the pivoted arm 65 said standard 73 will pass into contact with the proper tablet-rod and drive the tablet upward, the box 68 thereafter falling to its lower position. The frontward-and-backward movement of the boxes 68 is therefore, so far as the tablets are concerned, to bring the standard 73 into alinement with the tablets to be elevated, in order that under the action of the pivoted arms 65 said boxes 68 may be driven upward against the proper tablet-rods, whose tablets will bear numerals corresponding with the numerals at which the levers 23 were arrested along their slots 29. The tablets when elevated will, as above explained, be supported by the springs 72, while the boxes 68 will of their own weight return to their downward position, and said elevated tablets will remain exposed until by means of the proper hand-levers 23 the slides 39 are moved to withdraw the springs 72 from under said elevated tablets, and this is usually not done until another sale has been made and it is desired to elevate the proper tablets to denote the same. The lower ends of the tablet-rods are provided with the outwardly-extending feet 75, and the springs 72 pass under these feet to support the tablets when the latter are elevated. The upward movement of the boxes 68 thus, as above described, effects the exposure of the proper tablets, and in addition to performing this duty the upward move-

ment of said boxes 68 also effects the registering of the amount of the sale indicated by the tablet.

The boxes 68 are provided upon one face with the series of teeth 76, which are adapted to engage the teeth of the gear-wheel 77, the latter being in mesh with and adapted when operated to rotate the gear-wheel 78 and shaft 79, upon which said gear-wheel 78 is mounted. Upon reference to Fig. 3 it will be seen that each box 68 is provided with the rack 76 and that each box coöperates with a gear-wheel 77 and gear-wheel 78. Each box 68 when elevated effects the rotation of its gear-wheel 77, and through the latter the gear-wheel 78 and shaft 79. When four hand-levers 23 are made use of, it will be proper to provide four boxes 68 and four shafts 79 to be operated by said boxes. The shafts 79 extend horizontally from the front to the rear of the interior mechanism of the machine, and upon the front ends of these shafts 79 are secured the registering-dials, (numbered, respectively, 80, 81, 82, and 83.) The rotation of the shafts 79 by the boxes 68 and the intermediate gears above referred to causes the rotation of said registering-dials, and the extent of the rotation of said shafts 79 and said registering-dials is governed in accordance with the amount of the sale by means of the position of the box 68 and its rack 76 with relation to the gear-wheel 77, with which the said rack 78 will mesh upon the upward movement of the box. It is for this reason that the box 68 has a frontward-and-backward sliding movement with the movement of the hand-lever 23 and that the teeth of the rack 76 on said box 68 are graduated, the shorter teeth being at the top of said rack. All of the teeth of the rack 76 do not always engage and rotate the gear-wheel 77, since the amount of the sales will vary. When, for instance, the first hand-lever 23 at the right of the machine is thrown fully upward, as indicated in Fig. 5, the box 68 with its rack 76 will be drawn fully frontward, and at such time, when the box 68 is elevated by the upward movement of the rod 65, all of the teeth of the rack 76 will pass against the gear-wheel 77 and rotate the latter to its fullest extent, and this of course will result in the gear-wheel 78, shaft 79, and registering-dial 80 having a full rotation. Should, however, the sale amount to, say, three cents, the lever 23 would only be pushed upward a very short distance in its slot 29, and the box 68 would not be materially drawn frontward and only the left-hand ends (looking at Fig. 5) of the three lower teeth would be directly below the gear-wheel 77, and hence upon the elevation of the box 68 by the pivoted arm 65 the rack 76 thereof would pass entirely free of the gear-wheel 77 until the lower three teeth reached said gear-wheel 77, and thereafter said three teeth of the rack 76 would rotate the gear-wheel 77, gear-wheel 78, and dial 80 only three points, that being the amount of the sale. At the same time the upward movement of the box 68 would expose the tablet bearing the numeral "3" in line with the transparent portions 24 of the casing 20. Thus the position of the box 68 determines which tablet shall be elevated and to what extent the registering-wheels shall be rotated, and this position of the boxes 68 is governed wholly by the position of the hand-lever 23, which is under the direct control of the operator. The tablet exposed will always bear the numeral at which the hand-lever 23 is arrested along the line of its slot 29.

The racks 76 on the boxes 68 when elevated engage the gear-wheels 77 and through said gear-wheels, as above described, rotate the gear-wheels 78 and their shafts 79, which carry the registering-dials. During the descent of the boxes 68 it is desirable that they shall be permitted to move freely and not rotate the gear-wheels 77 and 78, and hence the gear-wheels 77 and 78 for each box 68 are mounted in the manner more clearly illustrated in Figs. 3 and 5, in which it will be seen that the gear-wheel 77 is mounted upon a stud 90, which is carried by the block 91, pivotally suspended by a sleeve 92 from the registering-dial shaft 79. When the block 91 is in its normal position, its outer end being weighted or heavier than its inner end, said block will rest upon the lug or support 93 provided for it, as clearly indicated in Fig. 3. During the upward movement of the box 68 the teeth of the rack 76 will act upwardly against the gear-wheel 77 and will rotate the latter, the block 91 at such time being supported against the lug 93 and thereby rendered capable of resisting the pressure of the upwardly-moving rack 76. When, however, the box 68 is descending, the teeth of the rack 76 then pressing downward upon the gear-wheel 77 will cause the said gear-wheel to tilt the block 91 upward and inward, since at such time the weight of the outer end or portion of said block 91 is insufficient to retain the block in its normal position. (Shown in Fig. 3.) Thus during the upward movement of the box 68 the block 91 will remain stationary and the teeth 76 may properly rotate the gear-wheels 77 and 78, but during the descent of the box 68 the gear-wheel 77 will be tilted downward and permit the box 68 to complete its descent without rotating the said gear-wheels 77 and 78. During the downward tilting of the gear-wheel 77 with the block 91 the teeth of said gear-wheel will simply move over the teeth of the gear-wheel 78 without rotating the latter, and after the box 68 has moved downward so that its teeth 76 are below the gear-wheel 77 the weight of the outer end of the block 91 will operate to restore said block to its normal position, the teeth of the gear-wheel 77 passing over the teeth of the gear-wheel 78 without rotating the latter.

The registering-dials on the front ends of the several shafts 79 are illustrated in Fig.

2 and are of usual form and construction. These dials (numbered 80 to 83, inclusive) will bear numerals corresponding with the tablets and with the numerals along the slots 29 for the hand-levers 23.

On the shaft 79 directly in rear of the first registering-dial 80 is the lever-arm 94, (see Fig. 4,) arranged to engage the outer end of the pivoted arm 95, which carries at its inner end the pivoted pawl 96 and is fashioned with the blunt end 97. With each rotation of the registering-dial 80 the lever-arm 94 will be carried against the pivoted arm 95 and depress the inner end of said arm sufficiently for the pivoted pawl 96, carried thereby, to rotate the second dial 81 a distance equal to one tooth of the gear-wheel 98, with which it rotates. When the inner end of the pivoted arm 95 is depressed to cause its pawl 96 to rotate the second dial a distance equal to one tooth of its gear-wheel 98, the blunt end 97 of said arm 95 will, as illustrated in Fig. 4, be brought into contact with the said gear-wheel 98 to prevent the latter from moving a greater distance than that represented by one of its teeth. The pivoted pawl 96 thus operates to rotate the gear-wheel 98 a definite distance, while the blunt end 97 of the arm 95 operates as a stop to prevent said gear-wheel from exceeding its movement either under the momentum of the parts or other cause. The pivoted arm 95, above described, is intermediate the dials 80 and 81, and, as shown in Fig. 2, a similar pivoted arm is intermediate the dials 81 and 82, and a further similar pivoted arm 95 is intermediate the dials 82 and 83. When the dial 80 is at the end of its rotation, the arm 95 adjacent to it is utilized to rotate the dial 81 a distance equal to one tooth of its gear-wheel 98, and when the dial 81 is at the end of its rotation the arm 95 adjacent to it will actuate the dial 82 to rotate a distance equal to one tooth of its gear-wheel, and when the dial 82 is at the end of its rotation the arm 95 adjacent to it will actuate the dial 93 to rotate a distance equal to one tooth of its gear-wheel 98, and thus in a well-known manner motion is transmitted along the line of registering-dials to effect the proper registration. Additional dials 99 and 100 may, if desired, be employed, as illustrated in Fig. 2. In rear of each registering-dial is a gear-wheel 98, as usual. The only novel feature claimed in regard to the registering-dials 80 to 83, inclusive, is the pivoted arms 95 for operating the same and having the pivoted pawls 96 and stop ends 97.

The operation of the various parts of the register have been so fully described hereinbefore that it will be unnecessary to redescribe the same at length hereinafter. A brief description of the operation of the register will, however, be given.

The hand-levers 23 have an oscillating motion from the shaft 35, and said levers carry the depressible shank 33 and segmental rack 36. The levers 23 are moved along the slots 29 in the front plate 22 and arrested at the numerals thereon corresponding with the amount of a sale. This movement of the hand-levers 23 operates through the segmental racks 36 and slides 39 to draw the boxes 68 into proper position to enable them when elevated to expose the proper tablets and effect the proper movement of the registering-dials to record the amount of the sale. When the hand-levers 23 are brought to a rest along their slots 29, the shanks or blades 33 of same or any one of same will be depressed to act upon the arms or arm 37 and rotate the shaft 38 toward the front, and thereby elevate the arm 40 carried by said shaft. The result of elevating the arm 40 is through the pivoted arm 44 to draw the plate 46 upward free of the stud 47, carried by the crank-arm 48, connected with the gear-wheel 50. The plate 46 having thus been elevated the crank-arm 48 is left unrestrained and the spring 26 is enabled to open the cash-drawer and through the rack 27 and gear-wheel 54 rotate the gear-wheel 50, crank-arm 48, and shaft 49. The rotation of the gear-wheel 50 operates the crank-arm 48 and shaft 49, and the movement of said crank-arm 48 causes the stud 47, carried thereby, to strike the heel of the bell-hammer 57 and sound the gong 58. The more important effect of the rotation of the gear-wheel 50 is that the shaft 49 on rotating carries with it the cam-arms 60, 61, 62, and 63 and causes the latter to ascend against the pivoted arms 65 and through said arms drive the boxes 68 upward for the purpose of elevating the proper tablets to be exposed and of actuating the registering mechanism. While in the present instance the spring 26 opens the cash-drawer, it performs the additional and more important function of causing the rotation of the shaft 49 and through said shaft exposing the tablets and securing the proper registering of the dials. During the return inward movement of the cash-drawer 21 the spring 26 is compressed and the tramway 28 will contact with the wider tooth 59 of the gear-wheel 54 and cause said gear-wheel to elevate to the position in which it is illustrated by dotted lines in Fig. 7 the said tooth 59 then riding on said tramway 28, until the cash-drawer has reached entirely home, whereupon the gear-wheel 54 will descend to its normal position in front of the rack 27. If there is any tendency on the part of the gear-wheel 54 to rotate when the tramway 28 engages its tooth 59 during the inward movement of the cash-drawer 21, such rotation will be prevented by the fact that the gear-wheel 54 is in mesh with the gear-wheel 50 and that the head 53 on the pivoted arm 52 is in a position, as shown in Fig. 7, to lock the gear-wheel 50 against rotation in the direction it would be compelled to rotate by any action of the gear-wheel 54 during the inward travel of the rack 27. When the cash-drawer is at its inward position, the spring 26 is pre-

vented from rotating the shaft 49, carrying the arms 60 to 63, inclusive, by the plate 46, whose lower end is at such time, as illustrated in Fig. 7, directly in the path of the stud 47, carried by the crank-arm 48. The shaft 49 is thus rotated by the spring 26 at the proper time, but is prevented from such rotation at any other time by the plate 46, stud 47, and crank-arm 48. The plate 46 has pivoted to it the arm 44 and is loosely held upon the shaft 38, and hence the moment the point of the arm 40 leaves the head 43 of the arm 44 the plate 46 will automatically fall to the position in which it is shown by full lines in Fig. 7.

In the accompanying drawings I have shown the spring 26 as pressing against a cash-drawer 21 and the rack 27 as carried by said cash-drawer, but the invention is not limited to the use of the cash-drawer, since in so far as the spring 26 is concerned the cash-drawer represents simply a convenient slide for carrying the rack 27, and whether said rack 27 is arranged upon what is technically termed a "cash-drawer" or upon a slide which would not form a receptacle for cash is immaterial. The rack 27, in connection with the gear-wheel 54, enables the spring 26 to rotate the gear-wheel 50 and shaft 49, and through said shaft to expose the tablets and operate the registering-dials, and I regard it as immaterial whether said rack 27 is arranged upon the cash-drawer or upon some other form of convenient slide arranged to be acted upon by the spring 26. The plate 46, stud 47, and crank-arm 48, the latter being upon the shaft 49, operate in connection with the gear-wheel 54 to lock the rack 27 at its inward position and to retain the spring 26 in its compressed condition, and the spring 26 will, by the means just described, be retained in its compressed condition until the operator by pressing inward upon the hand-levers 23 turns the shaft 38 and elevates the arm 40 thereof to free the plate 46 from the stud 47, this having the effect of freeing the operative parts, so that the spring 26 may expand itself, and in so doing drive the rack 27 against the teeth of the gear-wheel 54, and through said gear-wheel and the gear-wheel 50 rotate the shaft 49 and elevate the boxes 68 for the purpose of causing the latter to expose the proper tablets and effect the proper rotation of the registering-dials.

It is not intended to limit this application to the details of construction further than they may be specifically pointed out in the claims, and these details in their form and arrangement in the broader scope of this invention will be varied at will in accordance with the size of the register to be produced and the will of the manufacturer.

The invention and claims are not to be understood as limited in every instance to a bank of tablets, each of which is in a separate piece of material and provided with the independent tablet-rods, since the mechanism intermediate the tablets and the actuating-levers 23 is new and the mechanism intermediate the tablets and the sliding rack 27 is new, and said mechanism will be operative whether the tablets are made as shown or are on a cylinder or roll.

The boxes 68 have been hereinbefore described as boxes, owing to their form in cross-section, but said feature need not necessarily be of box-like form and is simply a convenient sliding plate carrying the rack-teeth to engage the registering mechanism and the standard to engage the tablet-rods.

Without therefore limiting myself to details of construction or forms of parts, what I claim as my invention, and desire to secure by Letters Patent, is—

1. In a cash-register, the actuating hand-lever, the rack adapted to be moved to position therefrom, and the registering-dial adapted to be operated by said rack, combined with a spring for indirectly moving said rack to operate said dial, and means connected with said actuating-lever and intermediate the same and said spring for releasing the latter to operate said rack after said lever has been moved to position; substantially as set forth.

2. In a cash-register, the actuating hand-lever, the rack adapted to be moved to position therefrom, the registering-dial adapted to be rotated by said rack to an extent corresponding with the movement of said lever, and the tablets bearing numerals to be exposed and adapted to be moved to the exposed position by said rack, combined with the spring by which said rack is indirectly operated, and mechanism intermediate said actuating-lever and said spring for releasing the latter when said lever has been moved to position for the purpose of permitting said spring to operate said rack and through the latter the registering-dial and tablets; substantially as set forth.

3. In a cash-register, the actuating hand-lever, the plate connected to be moved to position therefrom, and the tablets bearing numerals to be exposed and adapted to be moved to the exposed position by said plate, combined with the actuating-spring impelling the said plate to expose the proper tablet, and means intermediate said spring and plate for imparting the force of said spring when released to said plate; substantially as set forth.

4. In a cash-register, the actuating-lever, the plate connected to be moved to position therefrom, the registering-dial, and means intermediate said plate and dial whereby the latter is rotated from the former, combined with the actuating-spring impelling the said plate to action for the purpose of rotating said dial, and means intermediate said spring and plate for imparting the force of said spring when released to said plate; substantially as set forth.

5. In a cash-register, the actuating-lever,

the plate connected to be moved to position therefrom, the tablets bearing numerals to be exposed and adapted to be moved to the exposed position by said plate, the registering-dial, and means intermediate said plate and dial whereby the latter is rotated from the former, combined with the actuating-spring impelling said plate to expose the proper tablet and actuate said dial, and means intermediate said spring and plate for imparting the force of the spring, when released, to said plate; substantially as set forth.

6. In a cash-register, the actuating hand-lever, the plate connected to be moved to position therefrom, and the tablets bearing numerals to be exposed and adapted to be moved to the exposed position by said plate, combined with the actuating-spring impelling the said plate to expose the proper tablet, and means connected with said actuating-lever whereby from the latter said spring may be released; substantially as set forth.

7. In a cash-register, the actuating hand-lever, the plate connected to be moved to position therefrom, the registering-dial, and means intermediate said plate and dial whereby the latter is rotated from the former, combined with the actuating-spring impelling the said plate to action for the purpose of rotating said dial, and means connected with said actuating-lever whereby from the latter said spring may be released; substantially as set forth.

8. In a cash-register, the actuating hand-lever, the plate connected to be moved to position therefrom, the tablets bearing numerals to be exposed and adapted to be moved to the exposed position by said plate, the registering-dial, and means intermediate said plate and dial whereby the latter is rotated from the former, combined with the actuating-spring impelling said plate to expose the proper tablet and actuate said dial, and means connected with said actuating-lever whereby from the latter said spring may be released; substantially as set forth.

9. In a cash-register, the series of actuating hand-levers, the series of plates independently connected to said levers to be moved to position therefrom, and the independent sets of tablets bearing numerals to be exposed and adapted to be moved to the exposed position by said plates, combined with the actuating-spring impelling the said plates to expose the proper tablets in accordance with the position at which said levers are arrested, and means intermediate said actuating-levers and said spring whereby the latter from any of said levers may be released to act upon said plates; substantially as set forth.

10. In a cash-register, the series of actuating hand-levers, the series of independent plates connected with said levers to be independently moved to position therefrom, the series of registering-dials, and means intermediate said plates and dials whereby the latter may be rotated from the former, combined with the actuating-spring impelling said plates to action for the purpose of rotating said dials, and means intermediate the said actuating-levers and said spring whereby the latter may be released from any one of said levers; substantially as set forth.

11. In a cash-register, the series of actuating hand-levers, the series of independent plates connected with said levers and adapted to be moved to position therefrom, the independent sets of tablets bearing numerals to be exposed and adapted to be moved to the exposed position by said plates, the series of registering-dials, and means intermediate the said plates and dials whereby the latter may be rotated from the former, combined with the actuating-spring impelling said plates to expose the proper tablets and to rotate the proper dials, and mechanism intermediate said actuating-levers and spring whereby the latter may be released from any one of said levers; substantially as set forth.

12. In a cash-register, the actuating-lever, the sliding plate connected with and adapted to be moved to position by said lever and the lever-arm arranged to contact with said plate and to actuate the same, combined with the revoluble shaft carrying the arm to move the said lever-arm against said plate, means for actuating said shaft to effect the movement of said plate, and the tablets bearing numerals to be exposed and adapted to be moved to the exposed position by said plate; substantially as set forth.

13. In a cash-register, the actuating-lever, the sliding plate connected with and adapted to be moved to position by said lever, and the lever-arm arranged to contact with said plate and to actuate the same, combined with the revoluble shaft carrying the arm to move the said lever-arm against said plate, means for actuating said shaft to effect the movement of said plate, the tablets bearing numerals to be exposed and adapted to be moved to the exposed position by said plate, and means for supporting the exposed tablet while said plate returns to its normal position; substantially as set forth.

14. In a cash-register, the actuating-lever, the sliding plate connected with and adapted to be moved to position by said lever, and the lever-arm arranged to contact with said plate and to actuate the same, combined with the revoluble shaft carrying the arm to move the said lever-arm against said plate, means for actuating said shaft to effect the movement of said plate, the tablets bearing numerals to be exposed and adapted to be moved to the exposed position by said plate, means for supporting the exposed tablet while said plate returns to its normal position, and means for removing the support from the exposed tablet to allow it to descend to its concealed position preparatory to the succeeding tablet to be exposed being moved to its exposed position; substantially as set forth.

15. In a cash-register, the actuating-lever, the sliding plate connected therewith and adapted to be moved to position thereby, and means for elevating said plate to expose the proper tablet, combined with the supporting-spring for the exposed tablet, the set of tablets having tablet-rods whose lower ends turn outward toward said spring, and means for revolving said shaft at the proper time to move said plate against the proper tablet-rod; substantially as set forth.

16. In a cash-register, the actuating-lever, the slide connected with the lower end thereof, and the vertically-movable plate guided upon the inner vertical portion of said slide, said plate having the upwardly-extending narrow portion adapted to be brought into alinement with the tablet-rods, combined with the set of tablets having downwardly-extending independent rods, the shelf formed upon the upper end of the inner portion of said slide, the spring secured upon said shelf and having its upper end turned inward toward said tablet-rods, the outward extensions at the lower end of the tablet-rods adapted to pass above and rest upon said spring under the action of said plate, and means substantially as described for actuating said plate to move upward against the proper tablet-rod denoted by the position at which said actuating-lever is arrested in its movement; substantially as set forth.

17. In a cash-register, the actuating-lever, the slide connected therewith and adapted to be moved therefrom, and the plate guided upon the inner portion of said slide and provided with the rack, combined with the registering-dial whose shaft carries the gear-wheel, the revoluble shaft carrying an arm from which said plate is moved to effect through its rack the rotation of said dial, and means for revolving said shaft; substantially as set forth.

18. In a cash-register, the actuating-lever, the slide connected with and adapted to be moved therefrom, the plate guided on said slide and having the rack, combined with the registering-dial whose shaft carries the gear-wheel, the revoluble shaft carrying the arm from which said plate is moved to effect through its rack and said gear-wheel the rotation of said dial, and means under the control of the actuating-lever for effecting the rotation of said shaft; substantially as set forth.

19. In a cash-register, the actuating-lever, the slide connected therewith and adapted to be moved thereby, the plate guided upon said slide and having the rack, and the registering-dial whose shaft carries the gear-wheel, combined with the revoluble shaft carrying the arm from which said plate is actuated to effect through its rack and said gear-wheel the rotation of said dial, means for locking said shaft against rotation, the spring for rotating said shaft, and means intermediate said lever and said spring whereby the latter from the former may be released to effect the rotation of said shaft; substantially as set forth.

20. In a cash-register, the actuating-lever, the slide connected therewith and adapted to be moved therefrom, the plate guided on said slide and having the rack, and means for moving said plate when it is desired to register, combined with the registering-dial, the shaft therefor, the gear-wheel on said shaft, the block swiveled on said shaft adjacent to said gear-wheel, and the auxiliary gear-wheel mounted on said block and engaging the gear-wheel on said shaft, the relation of the parts being such that when said plate is moved in one direction against said auxiliary gear-wheel, the latter will effect the rotation of the registering-dial and that when said rack is moved in an opposite direction against said auxiliary gear-wheel the latter will tilt said block and remain inoperative; substantially as set forth.

21. In a cash-register, the actuating-lever, the series of registering-dials, the shafts for said dials, and gearing for operating said shafts, combined with the pivoted arms 95 intermediate said dials and having the stop ends, the pawls pivoted to said arms adjacent to said ends, the gear-wheels on said shafts adjacent to said dials to be engaged by said pivoted pawls and said stop ends, and arms on said shafts for engaging the shank ends of said pivoted arms 95, whereby from one shaft each arm 95 may be actuated to engage the gear-wheel of the next succeeding shaft and rotate said shaft and its dial a definite distance; substantially as set forth.

22. In a cash-register, the actuating-lever having the segmental rack at its lower end, the slide having the rack in engagement with and adapted to be moved by said segmental rack, the plate carried by said slide, the pivoted lever-arm whose free end is below said plate, the revoluble shaft having the arm engaging said pivoted arm, the registering mechanism adapted to be operated from said plate, and means for revolving said shaft to move said plate and thereby set the registering mechanism in motion; substantially as set forth.

23. In a cash-register, the actuating-lever having the segmental rack, the slide having the rack in engagement with said segmental rack and adapted to be moved therefrom, the plate having the graduated rack carried by said slide, and registering mechanism whose gear is adapted to be engaged by said rack on said plate, combined with pivoted lever adapted to throw said plate, the revoluble shaft having the arm in engagement with said pivoted lever, and means for revolving said shaft for the purpose of moving said plate to effect the rotation of the registering-dial; substantially as set forth.

24. In a cash-register, the series of actuating hand-levers, the sliding plates connected with said levers and adapted to be thereby

moved into proper relation to effect when actuated the rotation of the register-dials, the rock-shaft having the arms in contact with said actuating-levers and adapted to be moved thereby after said levers have been moved to position, the revoluble shaft and means intermediate said revoluble shaft and said plates whereby the latter receive motion from the former, combined with means for locking said revoluble shaft against rotation, means connected with said rock-shaft for freeing said revoluble shaft, and means for effecting the operation of said revoluble shaft after the hand-levers have been moved to their desired positions; substantially as set forth.

25. In a cash-register, the series of actuating-levers, the plates connected therewith and adapted to be moved therefrom into proper relative position with the registering-dials, the rock-shaft having the arms adapted to be engaged by said actuating-levers for the purpose of rotating the rock-shaft, the plate suspended from said rock-shaft and forming a locking device, the pivoted arm carried by said plate, and the arm connected with said rock-shaft and engaging said pivoted arm for the purpose of moving said plate hung from the rock-shaft, combined with the revoluble shaft carrying the gear-wheel, crank-arm and series of cam-arms, the auxiliary gear-wheel in engagement with the gear-wheel on the revoluble shaft, the pivoted plate affording a bearing for said auxiliary gear-wheel, the rack carried by the cash-drawer for engagement with said auxiliary gear-wheel, and the spring operating to throw the drawer open and rotate said gear-wheels upon the release of the plate hung from the rock-shaft by the pressure of the hand actuating-levers; substantially as set forth.

26. In a cash-register, the series of hand actuating-levers, the plates connected therewith and adapted to be moved therefrom into proper operative relation to the registering mechanism, the rock-shaft having the arms to be engaged and moved by the depression of said hand-levers, the locking-plate hung from said rock-shaft, the arm connected with said rock-shaft and adapted to elevate said plate upon the turning of said shaft, and the revoluble shaft having the crank-arm, gear-wheel and series of radial cam-arms, the latter being adapted to effect the movement of said plates to operate the registering mechanism, combined with the auxiliary gear-wheel in engagement with the said gear-wheel on the revoluble shaft, the movable plate affording a bearing for said auxiliary gear-wheel, the rack and tramway on the cash-drawer for engagement with said auxiliary gear-wheel, and the spring pressing against said cash-drawer and adapted to throw the same open upon the release of said locking-plate from said crank-arm by the pressure of the hand actuating-levers against said rock-shaft; substantially as set forth.

27. In a cash-register, the actuating hand-levers, the plates connected therewith and adapted to be moved therefrom into proper operative relation to the registering mechanism, the rock-shaft having the arms in engagement with said actuating hand-levers, the locking-plate suspended from said rock-shaft, the arm carried by said rock-shaft for moving said locking-plate, and the revoluble shaft having the crank-arm, gear-wheel and series of radial cam-arms, the latter for operating said plates to actuate the registering mechanism, combined with the auxiliary gear-wheel in mesh with the gear-wheel on said revoluble shaft, the bearing-plate affording a bearing for said auxiliary gear-wheel, the gong-hammer pivoted to said bearing-plate in the path of said crank-arm, the rack engaging said auxiliary gear-wheel and carried by the cash-drawer, and the spring pressing against said cash-drawer to open the same and adapted upon the release of the locking-plate from the crank-arm to throw the drawer open and actuate said revoluble shaft and crank-arm to effect the proper registering and the sounding of the gong; substantially as set forth.

28. In a cash-register, the series of actuating hand-levers, the plates connected therewith and adapted to be moved therefrom into proper operative relation with the registering mechanism, the rock-shaft having the arms to be engaged by said hand-levers for moving said shaft, the locking-plate hung from said shaft and adapted to be moved therefrom, the locking-arm pivotally secured to said plate and extending below the same, and the revoluble shaft carrying the crank-arm, gear-wheel and series of radial cam-arms, the latter being adapted to actuate the said plates for operating the registering mechanism, combined with the spring for effecting the rotation of said revoluble shaft when released by the depression of said hand-levers; substantially as set forth.

29. In a cash-register, the actuating hand-levers formed in two sections, one section carrying the segmental racks and the other section being adapted to be depressed, the rock-shaft having the arms in engagement with said sections of the hand-levers which may be depressed, the slides having the racks in engagement with said segmental racks, the rack-plates guided upon said slides, the independent pivoted levers having one end below said rack-plates, and the revoluble shaft carrying the radial cam-arms adapted to move said levers and thereby elevate said rack-plates for operating the registering mechanism, combined with means intermediate said rock-shaft and said revoluble shaft for locking the latter against rotation and freeing the latter from restraint by the depression of the hand-levers against the arms of said rock-shaft, and the spring adapted when said revoluble shaft is released by the actuating hand-levers to revolve said shaft and its radial cam-arms; substantially as set forth.

30. In a cash-register, the actuating hand-lever, the tablets to be exposed, and the registering-dials, combined with means connected to be moved to position by said lever for effecting the exposure of the proper tablet and the rotation of said dial, and mechanism intermediate said means and the cash-drawer whereby on the opening of the latter said means will be actuated to expose the proper tablet and operate the registering-dial; substantially as set forth.

31. In a cash-register, the actuating hand-lever, the tablets to be exposed, and the registering-dials, combined with means connected to be moved to position by said lever for effecting the exposure of the proper tablet and the rotation of said dial, and mechanism intermediate said means and the cash-drawer whereby on the opening of the latter said means will be actuated to expose the proper tablet and operate the registering-dial, and means for opening said drawer from said hand-lever; substantially as set forth.

32. In a cash-register, the actuating hand-levers, and the rock-shaft having the arms and adapted to be moved by said levers or any of them, combined with the cash-drawer, the spring for opening said drawer, means resisting the expansion of said spring, and means intermediate said rock-shaft and said spring for releasing said spring on the movement of said shaft by said hand-levers or any of them; substantially as set forth.

33. In a cash-register, the series of actuating-levers, the sliding racks adapted to be moved to position therefrom, and the registering mechanism, combined with the pivoted levers adapted when moved to operate said racks to actuate the registering mechanism, the revoluble shaft having the arms to engage said pivoted levers and move said racks, and means for revolving said shaft; substantially as set forth.

34. In a cash-register, the series of actuating-levers, the sliding racks adapted to be moved to position therefrom, and the registering mechanism, combined with the pivoted levers adapted when moved to operate said racks to actuate the registering mechanism, the revoluble shaft having the arms to engage said pivoted levers and move said racks, and means for revolving said shaft from the cash-drawer; substantially as set forth.

35. In a cash-register, the series of actuating-levers, the sliding racks adapted to be moved to position therefrom, and the registering mechanism, combined with the pivoted levers adapted when moved to operate said racks to actuate the registering mechanism, the revoluble shaft having the arms to engage said pivoted levers and move said racks, the gear-wheel on said revoluble shaft, means for locking said gear-wheel against rotation, the auxiliary gear-wheel to engage the first-mentioned gear-wheel, the sliding rack to engage said auxiliary gear-wheel when moved in one direction, the spring for moving said sliding rack against said auxiliary gear-wheel, and means for releasing said first-mentioned gear-wheel when it is desired that the machine shall register; substantially as set forth.

36. In a cash-register, the actuating-levers, the plates connected therewith and adapted to be moved therefrom to proper operative position with relation to the registering mechanism and tablets to be exposed, the rock-shaft carrying the arms adapted to be engaged by said levers after the latter have reached their desired position, the locking-plate hung from said rock-shaft, and the revoluble shaft having the crank-arm, gear-wheel and radial cam-arms, the latter being adapted for actuating said plates to operate the registering mechanism and tablet mechanism, the auxiliary gear-wheel in engagement with the gear-wheel on said revoluble shaft, the plate swiveled on said revoluble shaft, and affording a bearing at its lower end for said auxiliary gear-wheel and at its upper end engaging said rock-shaft, the rack carried by the cash-drawer for engagement with said auxiliary gear-wheel, and the spring exerting a tension against said cash-drawer and through it and the intermediate mechanism against said crank-arm, said spring when said crank-arm is released by the movement of said locking-plate therefrom under the action of the actuating-levers being adapted to eject said cash-drawer and rotate said revoluble shaft to set in motion the cash-registering mechanism and tablet mechanism; substantially as set forth.

37. In a cash-register, the actuating-levers, the plates connected therewith and adapted to be moved therefrom into proper operative relation with the registering mechanism and tablet mechanism, the revoluble shaft from which said plates are operated to actuate the registering mechanism and tablet mechanism, combined with means under the control of said actuating-levers for freeing said revoluble shaft to rotate or lock it against rotation, and means for rotating said shaft when the same is freed by the movement of said actuating-levers; substantially as set forth.

Signed at New York, in the county of New York and State of New York, this 27th day of March, A. D. 1897.

ELIJAH F. SPAULDING.

Witnesses:

CHAS. C. GILL,

E. JOS. BELKNAP.