United States Patent [19]

Davis et al.

[11] **Patent Number: Des. 296,330**

[45] **Date of Patent: ** Jun. 21, 1988**

[54] **OPTICAL CODE READER**

[75] Inventors: **Paul R. Davis; Michael G. Brorby; Mathew E. Misch,** all of Corvallis, Oreg.

[73] Assignee: **Videx, Inc.,** Corvallis, Oreg.

[**] Term: **14 Years**

[21] Appl. No.: **882,770**

[22] Filed: **Jul. 7, 1986**

[52] **U.S. Cl.** **D14/116**

[58] **Field of Search** ..... D14/105, 107, 114, 116; 235/454, 470, 472; 250/203 R, 566; 358/285

[56] **References Cited**

U.S. PATENT DOCUMENTS

D. 190,232	5/1961	Wilkey	D14/105
D. 277,101	1/1985	Hara et al.	D14/107
4,420,682	12/1983	Huber	235/472
4,445,028	4/1984	Huber	235/472
4,621,189	11/1986	Kumar et al.	235/454 X

Primary Examiner—Susasn J. Lucas

Attorney, Agent, or Firm—Chernoff, Vilhauer, McClung & Stenzel

[57] **CLAIM**

The ornamental design for an optical code reader, as shown and described.

DESCRIPTION

FIG. **1** is a top plan view of an optical code reader showing our new design;

FIG. **2** is a front elevational view thereof;

FIG. **3** is an inverted rear elevational view thereof;

FIG. **4** is an end elevational view thereof as seen from the left of FIG. **1;**

FIG. **5** is an end elevational view thereof as seen from the right of FIG. **1;**

FIG. **6** is a bottom plan view thereof;

FIG. **7** is a top, front perspective view thereof on an enlarged scale.

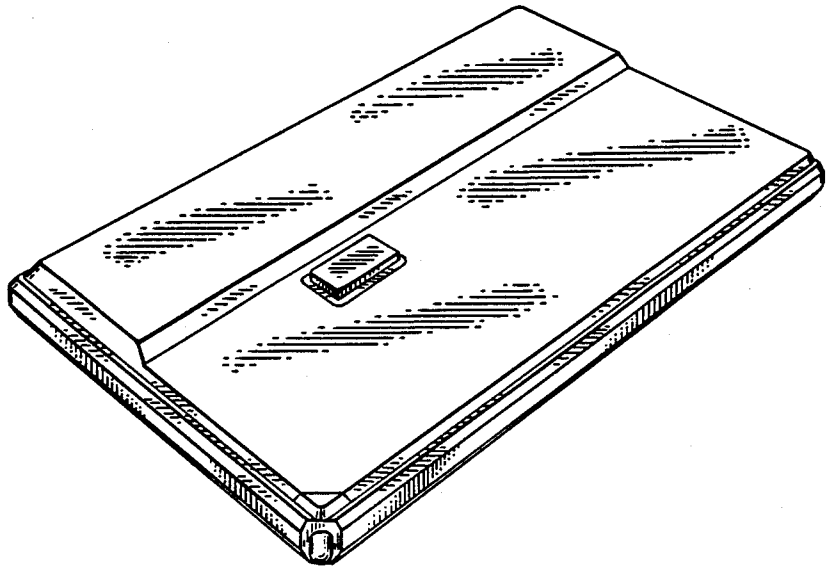

FIG. 3

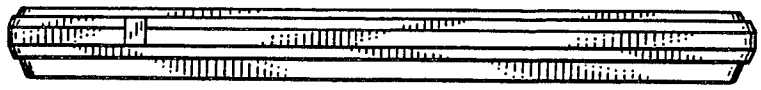

FIG. 4

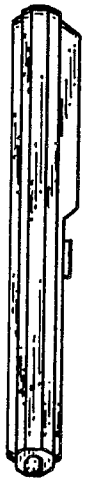

FIG. 1

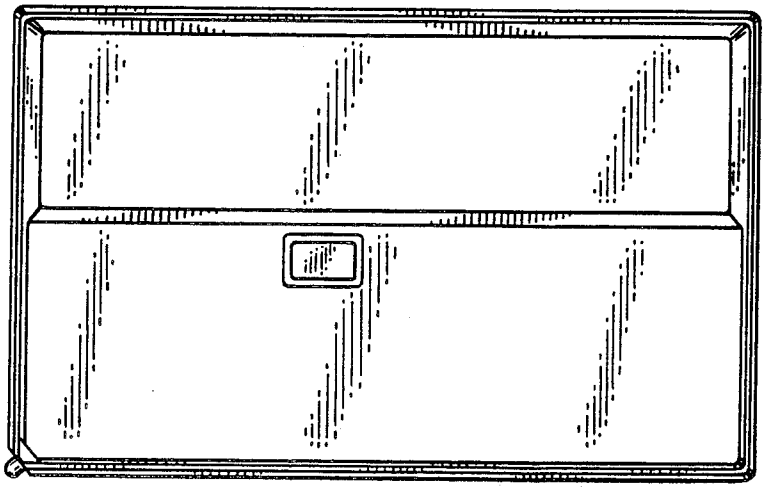

FIG. 5



FIG. 2



FIG. 6

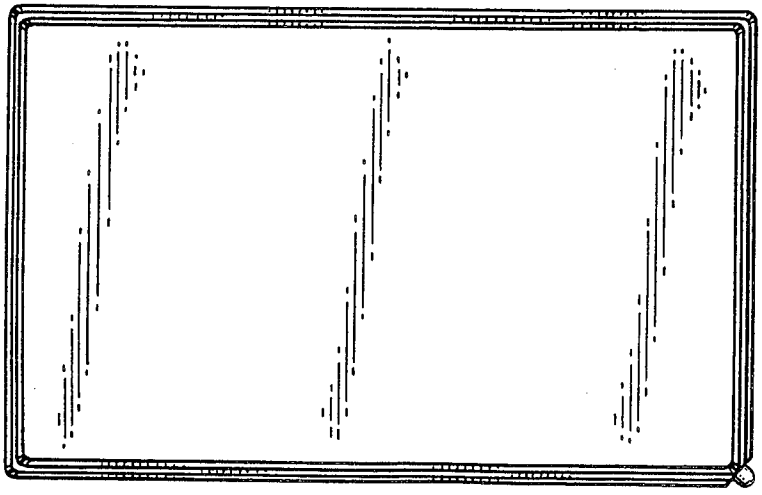

FIG. 7

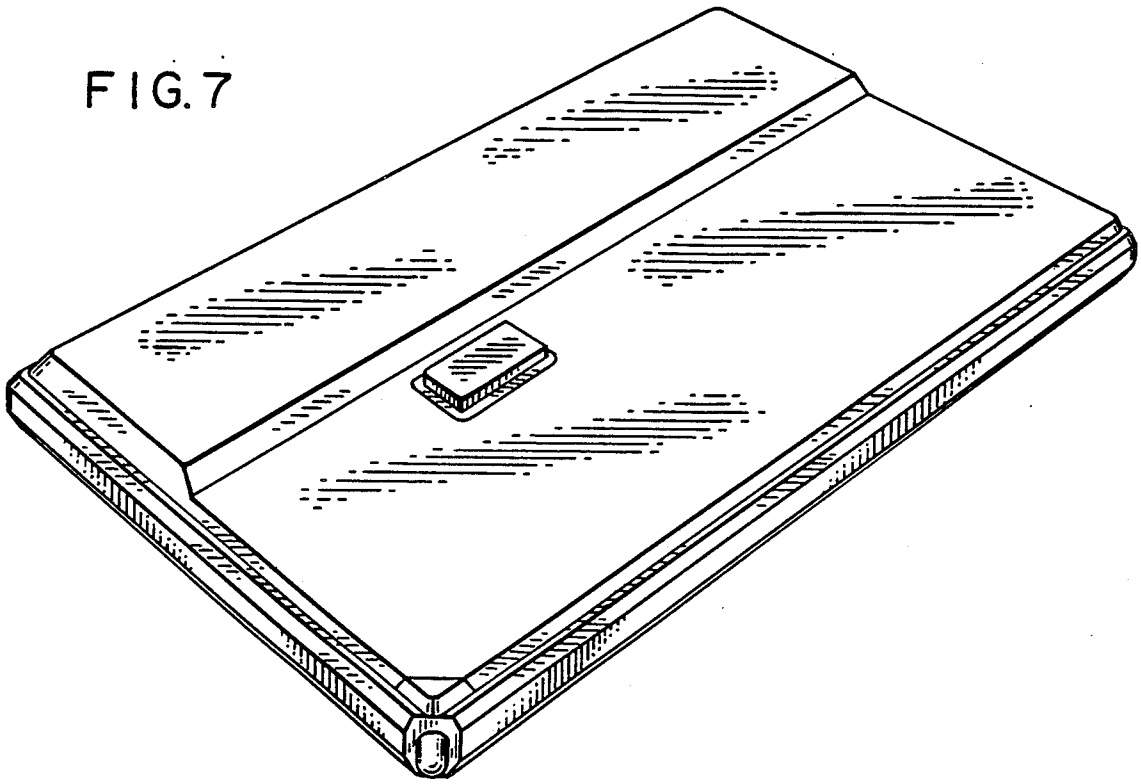

UNITED STATES PATENT AND TRADEMARK OFFICE

CERTIFICATE OF CORRECTION

PATENT NO. : Des. 296,330

DATED : June 21, 1988

INVENTOR(S) : Paul R. Davis, et al.

It is certified that error appears in the above-identified patent and that said Letters Patent is hereby corrected as shown below: Title Page:

Inventors: Change "Michael G. Brorby" to --Michael J. Brorby--

Signed and Sealed this

Fifteenth Day of November, 1988

Attest:

DONALD J. QUIGG

Attesting Officer

Commissioner of Patents and Trademarks