United States Patent

[11] **3,620,683**

[72] Inventors **Vladimir Hwoschinsky**
Buffalo;
James E. Nelson, Williamsville; Paul W. Westcott, North Tonawanda, all of N.Y.

[21] Appl. No. **775,769**
[22] Filed **Nov. 14, 1968**
[45] Patented **Nov. 16, 1971**
[73] Assignee **A-T-O Inc.**
Cleveland, Ohio

[54] **GAS GENERATOR**
11 Claims, 2 Drawing Figs.

[52] **U.S. Cl.** **23/281,** 23/221, 102/37.6, 102/65.4, 128/142.3
[51] **Int. Cl.** **B01j 7/00**
[50] **Field of Search** 23/281, 221; 102/1, 37.4, 37.6, 65.4, 70; 128/142.2, 142.3

[56] **References Cited**

UNITED STATES PATENTS

1,640,892	8/1927	Gammeter	102/37.4 UX
1,815,226	7/1931	Anderson	102/37.6 X
2,331,198	10/1943	Kiang	102/65.4
2,558,756	7/1951	Jackson et al.	23/281
2,758,015	8/1956	Bovard et al.	23/281
2,813,546	11/1957	Amison	102/65.4 X
2,983,588	5/1961	Bovard	23/281
3,276,846	10/1966	Moni et al.	23/281
3,443,907	5/1969	Mausteller	23/281
3,482,568	12/1969	Bovard	128/142.3
2,492,272	12/1949	Dauster	23/281 UX

FOREIGN PATENTS

861,622	2/1961	Great Britain	23/281

Primary Examiner—Morris O. Wolk
Assistant Examiner—Barry S. Richman
Attorney—Christel & Bean

ABSTRACT: A housing for encasing a gas generator comprising a shell formed of a filament-wound epoxy comprising glass filaments bonded with epoxy and having vent passages therethrough. The shell is closed at the bottom end and is provided with a removable cover at the upper end. Breathing equipment is compactly stored within the upper end of the housing and is connected to the cover for removal therewith. A firing mechanism is operatively connected to the cover and is adapted to be actuated upon removal of the cover. A detent is mounted in the housing for indicating that the cover has been axially shifted. Mounting members are pivotally mounted on the shell of the housing for attachment to a fixed support structure. When detached, the mounting members serve as handles in manually carrying the assembly.

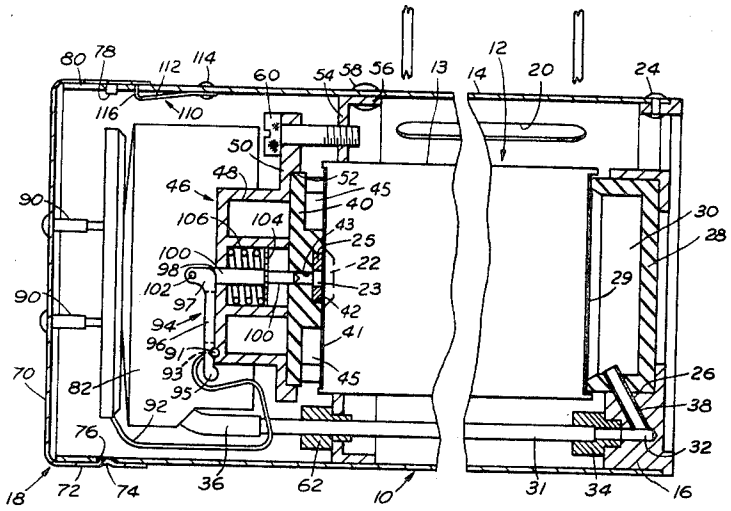

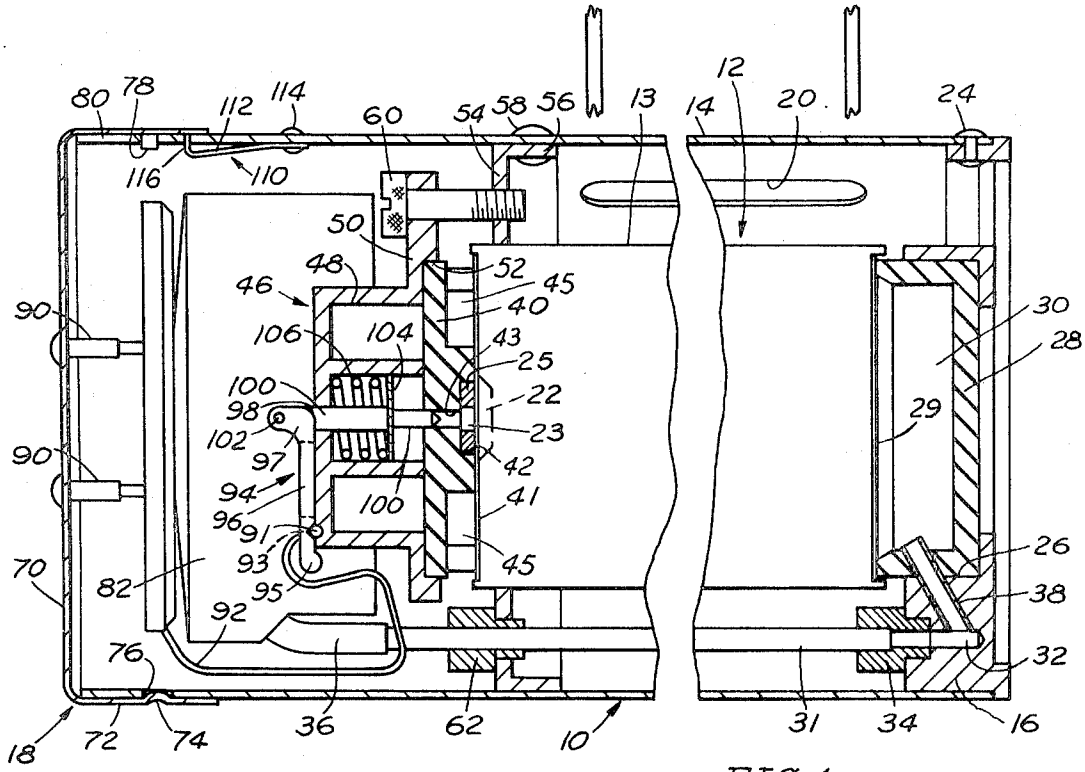

FIG. 1

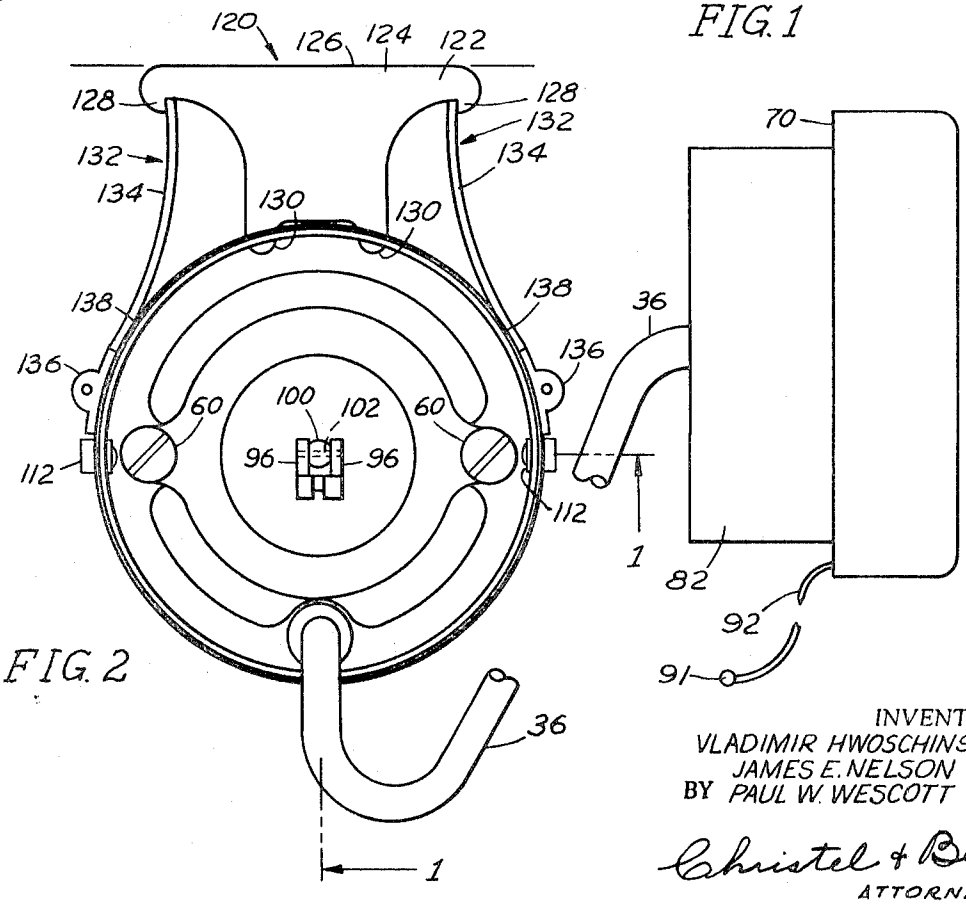

FIG. 2

INVENTORS.
VLADIMIR HWOSCHINSKY
JAMES E. NELSON
BY PAUL W. WESCOTT

Christel & Bean
ATTORNEYS

GAS GENERATOR

BACKGROUND OF THE INVENTION

This invention relates to gas generator assemblies and, more particularly, to a housing for packaging a gas generator and auxiliary breathing equipment.

Gas generators comprising oxygen evolving chlorate candles mounted in canisters or containers are known, and offer certain advantages over cylinders of oxygen under pressure. These generators are particularly desirable for one-man emergency situations in deeply submerged watercraft or high flying aircraft. However, such candles burn with an intense heat and although the canisters or containers are insulated, they reach excessive temperatures. A problem exists in properly mounting and storing these generators and also in handling these generators during ignition. It has been found desirable to locate such generators beneath passenger and crew personnel seats where they are readily accessible when needed and utilize normally unused space, but such location is complicated by the aforesaid heat problem.

SUMMARY OF THE INVENTION

Accordingly, it is an object of the present invention to provide an improved gas generator and mounting therefor.

It is another object of this invention to provide a gas generator housing formed of a heat- and shock-resistant material possessing the requisite stability and strength for supporting and protecting the gas generator mounted therein.

It is another object of the invention to provide a gas generator housing having heat insulating and dissipating means.

It is still another object of the present invention to provide warning means on the foregoing housing indicating that the packaged assembly has been tampered with.

It is also an object of this invention to provide a mounting for the foregoing from which the housing may be readily detached and rendered portable.

Generally speaking, the present invention provides a housing for a gas generator, such housing being formed of a filament-wound epoxy and having vent passages through the peripheral shell thereof. Mounting means are provided for detachably securing the housing to a support whereby the housing can be readily detached for rendering the same portable. A spring detent mounted in the housing is operative to indicate that the end cover of the housing has been axially shifted or tampered with.

The foregoing and other objects, advantages and characterizing features of the present invention will become clearly apparent from the ensuing detailed description of an illustrative embodiment thereof, taken together with the accompanying drawing wherein like reference numerals denote like parts throughout.

BRIEF DESCRIPTION OF THE DRAWING FIGURES

FIG. 1 is a longitudinal sectional view of a housing of the present invention containing a gas generator and other breathing apparatus; and

FIG. 2 is an end elevational view of the housing of FIG. 1 showing mounting means for the housing, with the end cover removed from the housing.

DESCRIPTION OF THE ILLUSTRATED EMBODIMENT

Referring to the drawing, there is shown a preferred form of housing of the present invention, generally designated **10**, encasing a disposable gas generator **12**, and other breathing apparatus, hereinafter described. Housing **10** is formed of a filament-wound epoxy comprising glass filaments bonded with an adhesive epoxy and is capable of withstanding extreme temperatures and abuse. Moreover, such a material possesses the requisite rigidity and strength for a stable and durable construction. Although a glass filament-wound epoxy bonded construction is preferable, it should be understood that any

material having similar heat- and shock-resistant properties can be used, if desired.

Housing **10** is of a generally cylindrical configuration and comprises a cylindrical tubular shell **14**, a bottom end cap **16**, and a top end cover **18**, preferably formed of a springy, resiliently yieldable material. The left end of housing **10**, as viewed in FIG. **1**, will be taken as the top or upper end of housing **10** for convenience of description, it being understood that housing **10** can be disposed in either an upright or a horizontal position. Shell **14** is provided with a plurality of elongated slots **20** forming vent or heat escape passages in the housing. Slots **20** are aligned in rows circumferentially spaced about shell **14** with three slots in each row. However, it should be appreciated that any necessary or desired number of slots may be provided and disposed in any aligned or staggered relationship and that they may take various configurations within the purview of this invention.

Gas generator **12** comprises a canister **13** substantially filled with an inner body composition capable of evolving oxygen upon burning. By way of example, the composition can consist of a consolidated body, hereinafter referred to as a candle, having uniformly distributed therethrough an alkali metal chlorate or perchlorate which generates oxygen upon combustion, a finely divided oxidizable material such as iron powder for burning and supplying part of the heat needed for combustion, a binder such as inorganic glass fibers or steel wool for holding the mass together and aiding in the even decomposition of the chlorate or perchlorate, and barium peroxide or like chlorine fixes for chemically eliminating traces of chlorine gas released during thermal breakdown of the chlorate or perchlorate. Such oxygen candle compositions are known and form no part of the present invention per se. The body composition can be press molded or cast to form a cylinder having an ignition area **22** in the form of a truncated cone disposed at the upper end thereof. Ignition area **22** comprises the foregoing composition enriched with a metal powder, such as iron, to provide a concentrated area of intense heat when ignited. The candle body can be encased within an insulating envelope (not shown) disposed against the inner surface of canister **13** to insulate canister **13** from the heat of combustion. A percussion cap **23** is mounted centrally of the candle on top of ignition area **22** and is maintained in position by means of an annular retainer **25** secured to the top of canister **13**.

Bottom cap **16** is secured to shell **14** by suitable fasteners, such as rivets **24** and is provided with a recess **26** for receiving a cup-shaped member **28** defining a plenum chamber **30**, the upper surface of member **28** engaging and supporting gas generator **12**. Member **28** is formed of a heat-resistant material which is stable under a wide range of temperatures, such as Teflon, to insulate housing **10** from generator **12** and to provide an adequate bearing support for generator **12**. A gasket **29** is interposed between the bottom of generator **12** and the upper surface of member **28**. An elongated delivery tube **31** extends parallel to generator **12** within shell **14** and has one end connected to a passage **32** in bottom end cap **16** by means of a coupling member **34** mounted in cap **16**. The other end of delivery tube **31** is connected to a flexible delivery hose **36**. A laterally extending conduit **38** mounted in member **28** and cap **16** connects chamber **30** with passage **32**.

A retainer **40**, formed of heat-resistant material stable under a wide variety of temperature ranges for the same reasons set forth in connection with member **28**, is disposed in bearing relation with the upper end of generator **12**. Thus, generator **12** is supported at its opposite ends by means of member **28** and retainer **40**, both bearing against the opposite ends of generator **12** and preferably formed of Teflon to insulate housing **10** against the heat of combustion of generator **12**. A gasket **41** is interposed between the bearing surface of retainer **40** and the upper end of generator **12**. A recess **42** and an aperture **43** is provided in retainer **40** for receiving retainer **25** and a firing pin **100**, respectively, as will hereinafter become apparent. Passages **45** are formed in

retainer 40 to permit the escape of heat generated by the combustion of generator 12.

An end cap 46 is provided for detachably securing generator 12 in place and comprises a depending skirt 48 having an outwardly radially extending flange 50. A recess 52 is provided in flange 50 for accommodating the upper peripheral edges of retainer 40. An annular support or retainer ring 54 aids in maintaining generator 12 in spaced relation relative to shell 14 and has a flange 56 secured to shell 14 as by means of fasteners such as rivets 58. Cap 46 is releasably attached to ring 54, as by means of bolts 60 extending through openings in flange 50 and threadably received in retainer ring 54. A fitting 62 is threadably mounted in retainer 40 for receiving delivery tube 31 and maintaining the same in spaced relation relative to generator 12.

End cover 18 comprises a body portion 70 having a cylindrical wall 72 depending therefrom with a depression 74 formed therein, adapted to engage a mating recess 76 in shell 14. A pin 78 extending radially inwardly from cover 18 is received in a slot 80 of shell 14 for accurately orienting cover 18 relative to shell 14 and generator 12. The upper end of housing 10 encases breathing equipment comprising an oro-nasal mask 82 with delivery hose 36 connected thereto and auxiliary equipment (not shown) such as particulate and chemical filters, a reservoir bag, seals, and a pressure relief valve. Such breathing equipment is provided in a compact kit form at the upper end of housing 10 and is connected to cover 18 as by means of studs 90 for example. When cover 18 is manually pulled from shell 14, the auxiliary equipment also is withdrawn from within shell 14 and used in accordance with instructions either printed on the outer surface of cover 18 or on a decal attached thereto.

An elongated actuating lanyard 92 is connected at one end to mask 82 and is provided with an enlargement 91 at its other end located beneath an aperture 93 in an elongated tripping lever 94 supported on the upper surface of end cap 46. A slot 95 in lever 94 extends from aperture 93 outwardly to the left end of lever 94. Enlargement 91 is slightly larger than aperture 93 and cannot be pulled therethrough. However, lanyard 92 can be withdrawn from lever 94 through slot 95 as will hereinafter become apparent. The other end of lever 94 is provided with bifurcations 96 having cam surfaces 98 on their undersides and ears 97 on their upper sides which straddle a firing pin 100 extending into end cap 46 and retainer 40 in coaxial alignment with igniter cap 23. The upper end of pin 100 has an opening for receiving a pin 102 projecting radially outwardly from both sides of firing pin 100 and supported in apertures of bifurcations 96. The lower end of firing pin 100 is provided with a collar 104 and a compression spring 106 is mounted on firing pin 100 between collar 104 and the inner surface of end cap 46.

Warning means are provided for indicating that the unit has been used or tampered with, such means comprising a pair of diametrically opposed spring detents 110 (only one is shown in FIG. 1) mounted within shell 14 each having an elongated body portion 112 attached at its one end to shell 14 as by means of a rivet 114. The other end of body portion 112 has a tongue 116 the free end thereof normally disposed in an opening provided in shell 14 and biased against the inner surface of wall 72 of end cover 18. If the cap is partially shifted axially outwardly or removed tongue 116, due to the bias of body portion 112, will project radially outwardly beyond shell 14. The extension of tongues 116 outwardly of shell 14 can be readily noticed by an observer to indicate that end cover 18 has been shifted or tampered with. Moreover, end cover 18 cannot be replaced without first depressing tongues 116 inwardly of shell 14.

The packaged housing unit is portable and can be readily attached to or removed from a mounting support, such as can be provided beneath passenger seats in an aircraft for example. A pair of spaced mounting brackets 120 are secured to the underside of a passenger seat by any suitable means. Each mounting bracket (FIG. 2) comprises a body 122 having a transversely extending edge 124 secured to a supporting surface 126. The lateral portions of edge 124 are downwardly curved and terminate in hooks 128. A pair of projections 130 extend downwardly from body 122 and are insertable into vent passages 20 of housing 10. Brackets 120 are longitudinally spaced relative to housing 10 in such a manner so that projections 130 engage the remote ends of the farthest spaced-apart slots 20 to prevent any longitudinal movement of housing 10 relative to its support. Also, the width of projections 130 are slightly less than the widths of slots 20 so as to snugly received therein to preclude lateral or rotational movement of housing 10 relative to its support.

Shell 14 is provided with a pair of circumferentially spaced mounting members 132, each of generally U-shaped configuration, the opposite arcuately curved legs 134 thereof being mounted at their free ends for pivotal movement on longitudinally spaced hinge brackets 136 mounted on shell 14. Members 132 are preferably formed of a springy, resiliently yieldable metal. In mounting housing 10 on brackets 120, members 132 are pivoted on the positions shown in FIG. 2 and are snap fitted over hooks 128 of brackets 120. The engagement of shell 14 with the lower ends of arcuately shaped legs 134 as at 138 urges members 132 radially outwardly in firm interlocking engagement with hooks 128 to positively secure the housing assembly in place. The housing assembly is easily detached from brackets 120 by exerting an inwardly directed force on legs 134 and lowering housing 10 to withdraw projections 130 from slots 20 of shell 14. Thus, housing 10 may be attached to a supporting structure as described above or rendered portable by simply detaching the housing from its supporting structure.

In use, end cover 18 is removed from housing 10 carrying with it mask 82 and any associated apparatus. Mask 82 is placed over the wearer's nose and mouth. As mask 82 is removed from housing 10, lanyard 92 carried thereby is stretched taut and actuates lever 94 by pivoting the same about cam surface 98. As lever 94 pivots, it raises firing pin 100 and collar 104 vertically and further compresses spring 106. Lanyard 92 gradually slides outwardly along slot 95 as lever 94 is pivoted until lever 94 reaches a near vertical position, at which time lanyard 92 is completely withdrawn from lever 94 to release the same and the force of spring 106 plunges firing pin 100 downwardly to strike igniter cap 23 and ignite generator 12. Thus, without changing position in an emergency situation, a passenger can remain seated and reach under his seat to remove end cover 18 with one hand and in one sweep of the arm place mask 82 over his nose and mouth while initiating ignition of generator 12.

As oxygen is produced by burning generator 12, it escapes through chamber 30, conduit 38, passage 32, delivery tube 31 and hose 36 through the breathing apparatus into mask 82. As hereinbefore mentioned the breathing apparatus can include a particulate filter and a chemical filter so that clean oxygen issues directly into mask 82. The oxygen candle can be of the type having a 30-minute duration featuring a four-stage ignition, full flow operation at the mask within 2 seconds after actuation, a minimum of 4.7 liters per minute oxygen flow for the first three minutes followed by a smooth transition from 4.5 lpm to a minimum of 2.7 lpm for the remainder of the 30-minute duration. With end cover 18 removed, used generators can be readily replaced by simply unscrewing bolts 60 and removing end cap 46 and retainer 40.

From the foregoing it is seen that the present invention fully accomplishes its intended objects and provides a simple heat resistant housing for expendable gas generators and which requires only a minimum of space, is easy to handle and has a long shelf life. The housing shell is spaced from the generator and is provided with vent passages for dissipating the heat released from the burning generator through convection and radiation. By the provision of mounting members 132 pivotally mounted on housing 10 and cooperable with supporting brackets 120, the housing can be detachably secured in firm interlocking engagement with a supporting structure or

easily removed therefrom and hand carried. In the latter case, members 132 can serve as hand grips or handles for convenient conveyance.

An illustrative embodiment of this invention having been disclosed, it is to be understood that numerous modifications thereof can be made without departing from the spirit and scope of this invention as defined in the appended claims.

We claim:

1. A housing for a gas generator comprising an elongated shell having opposite ends and a peripheral sidewall, an end cap closing one end of said shell, and an end cover displaceably mounted on the other end of said shell and adapted to completely close said other end of said shell, means removably securing a gas generator within said shell in spaced relation from said opposite ends and said sidewall of said shell, and means connected to said end cover for automatically igniting said gas generator upon a predetermined axial displacement of said end cover relative to said shell.

2. A housing according to claim 1 wherein said sidewall of said shell has a plurality of openings therethrough forming vent passages.

3. A housing according to claim 1 together with means mounted on said sidewall of said shell for indicating displacement of said end cover.

4. A housing according to claim 1 wherein said removable securing means includes longitudinally spaced means engageable with opposite ends of said generator for supporting said generator and for insulating said shell from said generator.

5. A housing according to claim 4 wherein said removable securing means includes an annular support for maintaining said generator in spaced relation with said shell.

6. A housing according to claim 1 together with means mounted on said sidewall of said shell detachably engageable to a support structure.

7. A housing according to claim 6 wherein said detachable securing means includes a pair of laterally spaced members pivotably mounted on said shell.

8. A housing according to claim 7 together with a support structure having a pair of longitudinally spaced brackets, said laterally spaced members engageable with said brackets, and said brackets having projections engageable with openings provided in said shell.

9. A housing for a gas generator comprising an elongated shell having opposite ends, an end cap closing one end of said shell, and an end cover displaceably mounted on the other end of said shell and adapted to close said other end of said shell, means removably securing a gas generator within said shell in spaced relation from said shell, means connected to said end cover for automatically igniting said gas generator upon a predetermined axial displacement of said end cover relative to said shell, said housing encasing breathing apparatus connected to said end cover and removed therewith for use in conjunction with said gas generator.

10. A housing for a gas generator comprising an elongated shell having opposite ends, an end cap closing one end of said shell, and an end cover displaceably mounted on the other end of said shell and adapted to close said other end of said shell, means removably securing a gas generator within said shell in spaced relation from said shell, means connected to said end cover for automatically igniting said gas generator upon a predetermined axial displacement of said end cover relative to said shell, said shell being formed of wound glass filaments bonded with epoxy.

11. A housing for a gas generator comprising an elongated shell having opposite ends, an end cap closing one end of said shell, and an end cover displaceably mounted on the other end of said shell and adapted to close said other end of said shell, means removably securing a gas generator within said shell in spaced relation from said shell, means connected to said end cover for automatically igniting said gas generator upon a predetermined axial displacement of said end cover relative to said shell, means mounted on said shell for indicating displacement of said end cover, said indicating means comprising a spring detent normally biased against the inner surface of said end cover and adapted to project outwardly radially of said shell when said end cover is displaced axially.

* * * * *