June 25, 1957 L. W. CAMP ET AL 2,797,399

UNDERWATER TRANSDUCER

Filed March 8, 1955

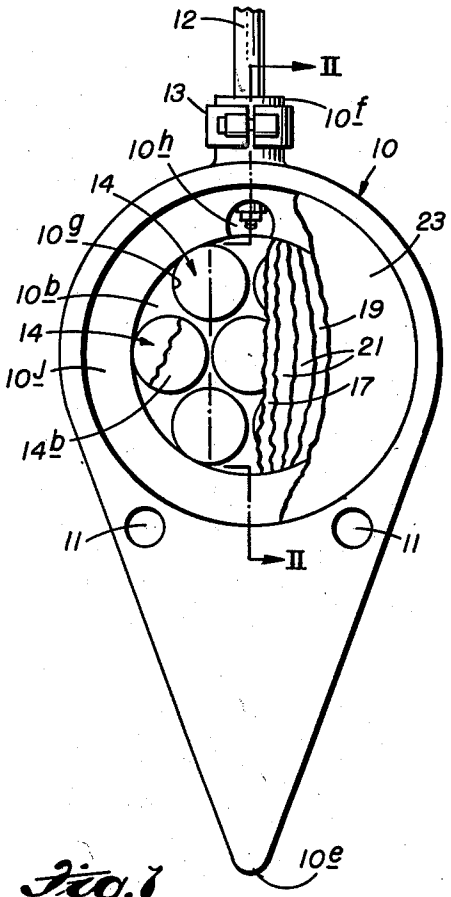

Fig. 1

Fig. 2

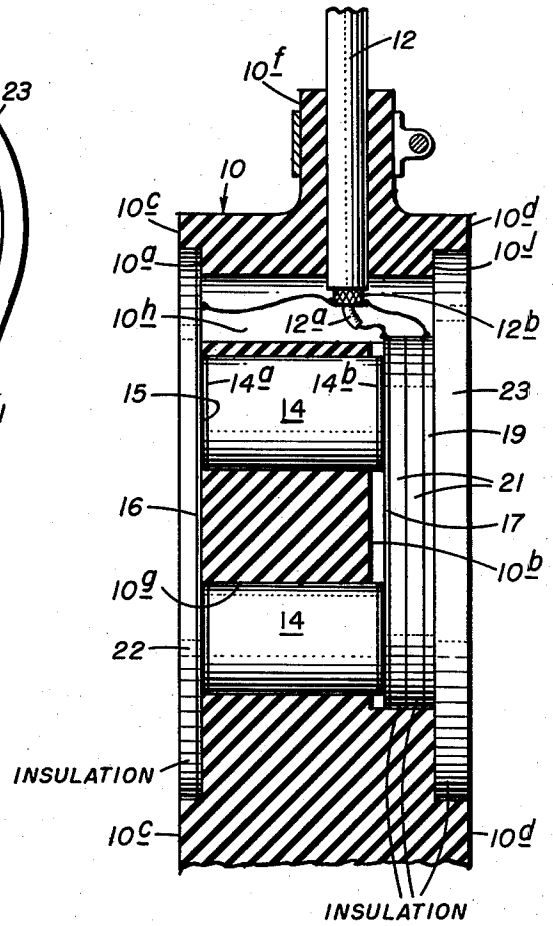

LEON W. CAMP
WILLIAM A. DANIEL
INVENTORS

BY E. L. Woodbury
ATTORNEY

United States Patent Office

2,797,399

Patented June 25, 1957

1

2,797,399

UNDERWATER TRANSDUCER

Leon W. Camp, Glendale, and William A. Daniel, Van Nuys, Calif., assignors to Bendix Aviation Corporation, North Hollywood, Calif., a corporation of Delaware

Application March 8, 1955, Serial No. 492,895

9 Claims. (Cl. 340—8)

This invention relates to underwater transducers for converting electrical oscillations into traveling pressure waves in liquids, and vice versa, and is particularly adapted to utilize longitudinally vibratile ceramic elements which are electromechanically responsive.

An object of the invention is to provide a simple, reliable, efficient and inexpensive transducer employing electromechanically responsive ceramic bodies as the active elements.

Other more specific objects and features of the invention will appear from the description to follow.

Briefly, a transducer in accordance with the invention consists, in its preferred form, of an array of electromechanically responsive ceramic cylinders in spaced relation, all bonded at one end to a first common electrode and all bonded at their other ends to a second common electrode. The cylinder and electrode assembly is contained in a flat rubber case or body adapted (when used for depth sounding) to be secured against the under surface of a boat. The front wall of the case juxtaposed to the active elements is constituted by a thin diaphragm which forms a watertight barrier through which vibrations are readily transmitted between the front ends of the active elements and the exterior water. The portion of the case back of the active elements is a rubber wall spaced from the rear ends of the elements by sound-absorptive material that constitutes a poor medium for propagation of acoustic energy to and from the rear ends of the elements.

A full understanding of the invention may be had from the following detailed description with reference to the drawing, in which:

Fig. 1 is a front view of a transducer in accordance with the invention.

Fig. 2 is a sectional view taken along the line II—II of Fig. 1.

Referring to the drawing, the transducer therein disclosed comprises a body **10** molded or otherwise formed from rubber or similar material and having a pair of countersunk faces **10***a* and **10***b*, respectively, juxtaposed to each other. Exterior of the countersunk faces **10***a* and **10***b*, the front surfaces **10***c* and **10***d*, respectively, of the body **10** are flat and parallel. Two mounting holes **11** are provided near the middle of the body for screwing or bolting it against the under surface of a boat with the rear surface **10***d* lying against the boat and the front surface **10***c* facing downwardly.

As will be observed from Fig. 1, the recessed or countersunk faces **10***a* and **10***b* are located adjacent one end of the body, which is extended in wedge form to a leading edge **10***e*, which is pointed toward the forward end of the boat so that it divides the water and reduces turbulence at the active face. A cable **12** containing the electrical conductors is preferably extended from the rear end (the end opposite the leading edge **10***e*) of the body **10**. The cable extends through an aperture in a neck portion **10***f* of the body which is compressed tightly about the cable by a clamp **13**.

2

In the particular model shown, there are seven active elements **14** in the form of solid cylinders of an electromechanically responsive ceramic, such as barium titanate, supported in holes **10***g* provided in that portion of the body **10** extending from the front face **10***a* to the rear face **10***b*, hereinafter referred to as the inner wall. The holes are dimensioned to snugly receive the elements **14** and support them in relatively fixed relative positions. Each element **14** has electrodes **14***a* and **14***b* on its front and rear ends, respectively, intimately bonded to the ceramic material. These electrodes are formed by painting the elements with silver paint and baking them to leave a thin film of metallic silver. The front electrodes **14***a* of all the ceramic elements **14** are bonded by a suitable cement **15** to a lamination **16** of metallic foil which constitutes one electrical terminal. The other electrodes **14***b* of the elements **14** are similarly cemented to a common terminal consisting of a disk **17** of metallic foil. It is found that by sandblasting the surfaces of the foil terminals that are cemented to the electrodes **14***a* and **14***b*, the surfaces are roughened sufficiently to penetrate the cement at numerous points and make electrically conductive contact with the electrodes.

An additional hole **10***h* is provided extending between the faces **10***a* and **10***b* adjacent the neck **10***f* into which the end of the cable **12** extends. This cable contains a central high potential conductor **12***a* and a concentric low potential conductor **12***b* surrounding it. The central conductor **12***a* is connected to the rear electrical terminal **17**, and the outer conductor **12***b* is connected to the front electrical terminal **16** and to a shielding electrode **19** which is positioned back of the rear electrode **17** and electrically and acoustically insulated therefrom by one or more layers **21** of insulating material, such as air cell rubber or Corprene.

To seal the mechanism described from the outside water, the front terminal foil **16** is covered by a flexible impervious diaphragm **22** which fills the recess defined by the front face **10***a* and is cemented to the body **10** at its edges. The diaphragm **22** may consist of a lamination of acoustically suitable plastic material, such as fiberglass, and the front foil **16** may be bonded to the rear surface of the diaphragm **22** prior to assembly. The rear recess back of the rear face **10***b* is closed by a rear rubber wall **23** which is dimensioned to fit against a countersunk face **10***j* in the body **10** and is cemented thereto.

Water pressure against the diaphragm **22** is opposed by the supporting force of the ceramic elements **14** and by the front face **10***a* of the inner wall of the body, the two being arranged flush in a common plane. The rear ends of the elements **14** may or may not be flush with the rear face **10***b*. However, they should either be flush with the rear face or projected thereabove, as shown in Fig. 2, to insure that the rear ends of the elements **14** will be supported through the insulating pads **21** and the shield electrode **19** by the rear wall **23**, which is subjected to the same hydrostatic pressure as the diaphragm **22**.

The front terminal **16** and the diaphragm **22** are relatively flexible, so that the diaphragm does not necessarily vibrate as a complete piston, but rather each portion of the diaphragm juxtaposed to an active unit **14** vibrates with the front face of that unit. The terminals **16** and **17** are preferably made of very thin metal foil so that their mass is inconsequential.

The ceramic elements **14** may be of any well-known material, such as barium titanate, and are pre-polarized in accordance with well-known practice, so that they respond to mechanical vibrations applied thereto through the diaphragm **22** to generate potentials between their electrodes **14***a* and **14***b* and respond to alternating electrical potentials applied to their electrodes to expand and contract longitudinally and thereby vibrate the dia-

phragm 22. It is customary to make vibrating devices of this type of length equal to one-half wave length of sound therein at the operating frequency. At a frequency in the neighborhood of 100,000 cycles per second, the ceramic elements 14 would be approximately ⅞" in length.

Although for the purpose of explaining the invention, a particular embodiment thereof has been shown and described, obvious modifications will occur to a person skilled in the art, and we do not desire to be limited to the exact details shown and described.

We claim:

1. In an underwater transducer: a body comprising an inner wall of rubberlike material of substantial thickness having parallel front and rear faces and defining a hole extending between said faces, a rear wall of rubberlike material parallel to and spaced from said rear face, a diaphragm element covering said front face, and lateral wall means defining with said rear wall and diaphragm element a watertight enclosure; a longitudinally vibratile electromechanically-responsive ceramic element positioned in and fitting said hole whereby it is supported by said inner wall, said element having electrodes on its end surfaces; said diaphragm having a conductive inner surface layer bonded to and constituting a front electrical terminal for the front electrode of said ceramic element; and a rear conductive electrical terminal element overlying and bonded to the rear electrode of said ceramic element.

2. A transducer according to claim 1 in which said inner wall has a plurality of additional holes extending between said faces and a plurality of additional ceramic elements in said additional holes, each like the mentioned ceramic element and bonded at its ends to said diaphragm element and said rear electrode element, respectively.

3. A depth sounding transducer according to claim 1, adapted to be mounted against the under side of a boat in which: said body is of substantially uniform thickness except at said front and rear faces, which are countersunk therebelow to such extent that said diaphragm element and said rear wall element are flush with the front and rear surfaces of the body.

4. A transducer according to claim 3 in which the leading portion of said body extends substantially away from said faces and the extended portion of the sides converge to a leading edge.

5. A transducer according to claim 4 in which the trailing portion of said body beyond the rear of said faces is substantially semicylindrical.

6. A transducer according to claim 1 in which said diaphragm element comprises an inner metal foil lamination and an outer flexible lamination of electrical insulating material and means bonding said laminations together.

7. A transducer according to claim 1 including a layer of sound-absorptive material between said rear electrode element and said rear wall.

8. A transducer according to claim 7 including an electrostatic shield consisting of a layer of electrically conductive material between said sound-absorptive material and said rear wall.

9. A transducer according to claim 1 in which said front and rear electrical terminals each consist of a metal foil overlying and cemented to its associated electrode and the foil surface next to the electrode is rough to provide high points penetrating the cement and electrically contacting the electrode.

No references cited.