July 7, 1959 J. R. STRONG 2,893,037

FLOOR SCRUBBING APPLIANCE

Filed June 22, 1956 2 Sheets-Sheet 1

FIG. 1

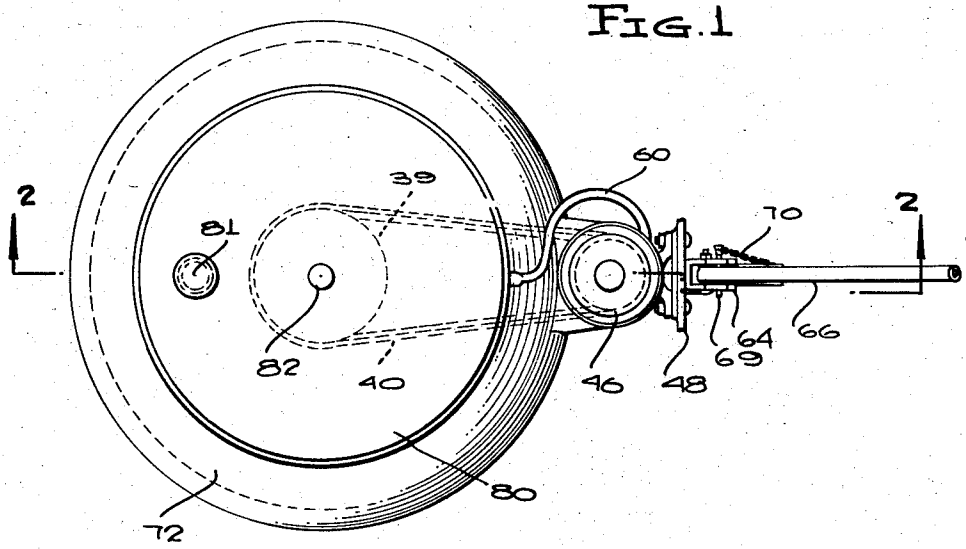

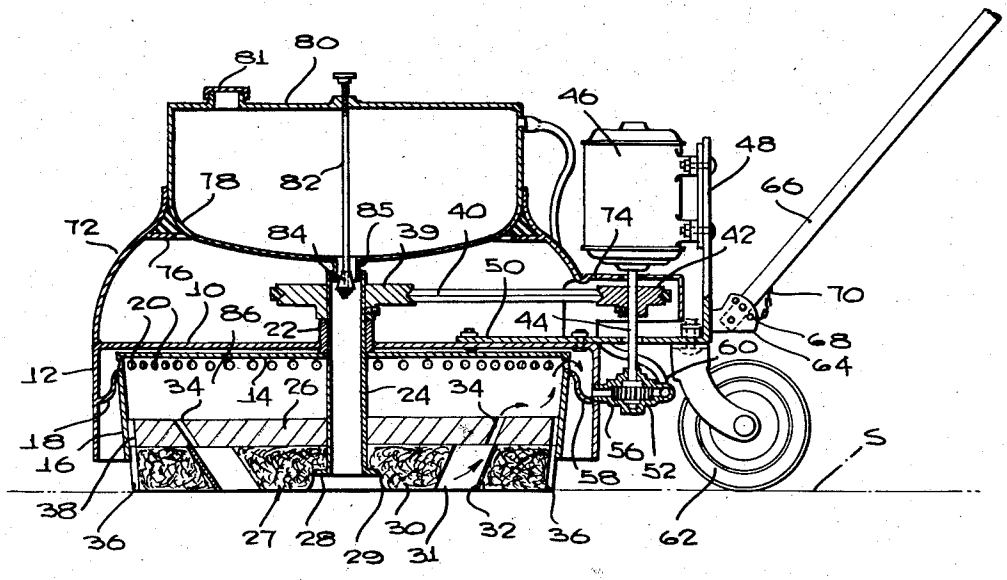

FIG. 2

INVENTOR.
JOY R. STRONG

BY

McMorrow, Berman & Davidson
ATTORNEYS

July 7, 1959 J. R. STRONG 2,893,037

FLOOR SCRUBBING APPLIANCE

Filed June 22, 1956 2 Sheets-Sheet 2

FIG. 3

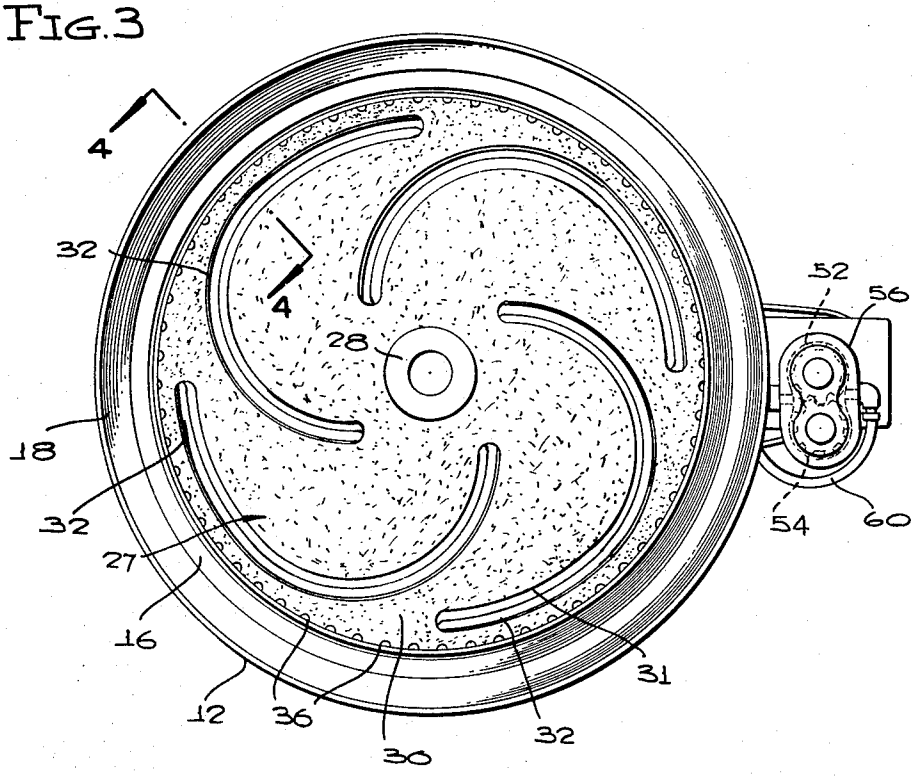

FIG. 4

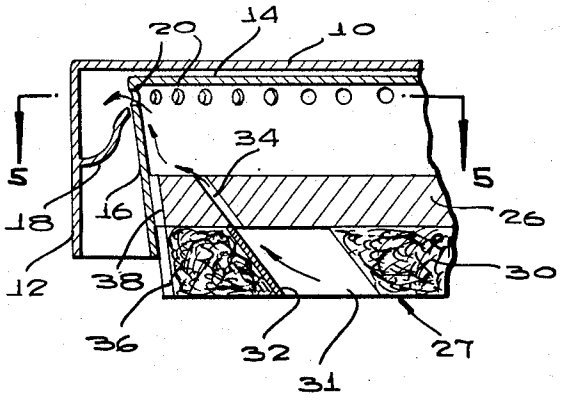

FIG. 5

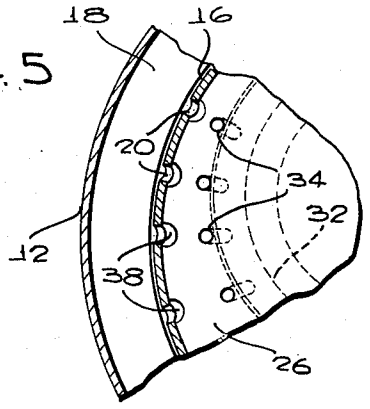

INVENTOR.
JOY R. STRONG
BY

McMorrow, Berman & Davidson
ATTORNEYS

United States Patent Office

2,893,037

Patented July 7, 1959

2,893,037

FLOOR SCRUBBING APPLIANCE

Joy R. Strong, Fort Collins, Colo.

Application June 22, 1956, Serial No. 593,290

2 Claims. (Cl. 15—180)

This invention relates to a scrubbing appliance, and more particularly has reference to a device of this nature adapted to be used to advantage in scrubbing a floor or other surface by the combined effects of a power-driven, rotary brush, a continuous cycling of water, and a centrifugal action as said water is fed radially, outwardly of the brush in spiralling paths during operation of the device.

Summarized briefly, the invention includes a reservoir for liquid, mounted upon a downwardly flaring housing, at the lower end of which there is provided a depending, annular skirt formed with an inwardly, upwardly directed flange to define throughout the marginal area of the skirt a trough, through which water is fed to a pump effective for returning the water to the reservoir.

Rotating within the depending flange or skirt portion is a downwardly opening brush holder, driven by a suitable motor, which motor is also used to power the pump. The brush holder is closed at its lower end by a rotary brush, having a plurality of spirally extending channels, the walls of which are so designed as to cause said channels to trap water that is directed radially, outwardly by centrifugal action during rotation of the brush. The water, after being so trapped, flows out of the brush holder into the previously mentioned trough, for recycling. When the water has been returned to the reservoir, it flows downwardly from the reservoir through a centrally disposed tube, opening at its lower end upon the center area of the brush. In this way, on operation of the motor and movement of the appliance over a floor or other surface, the brush is rotated at high speed, and water is continuously cycled through the appliance, passing through the brush by centrifugal action, to be trapped and returned to the reservoir.

One object of importance is to provide a device of the character described that will have a combined flushing, cleaning, and scrubbing action upon a floor surface.

Another object is to provide said scrubbing action by the use of a continuous flow of water, while still not requiring that the water be continuously fed to the apparatus from an external source.

Another object is to provide the above described action while still utilizing a relatively small quantity of water.

Yet another object is to provide an improved scrubbing action deriving from the combination of a rotary brush with centrifugally directed water fed to the brush during operation of the device.

Yet another object is to provide a device of the character stated that will be relatively simply designed, will be compact, will be capable of being moved over a floor or other surface with maximum ease and with little strain or effort so far as the user is concerned, will have a particularly effective scrubbing action, and will be designed to facilitate the cleaning of relatively inaccessible surfaces, such as those in the corners of rooms or other structures.

Other objects will appear from the following description, the claims appended thereto, and from the annexed

drawing, in which like reference characters designate like parts throughout the several views, and wherein:

Figure 1 is a top plan view of a floor scrubbing appliance according to the invention;

Figure 2 is a longitudinal section on line 2—2 of Figure 1;

Figure 3 is an enlarged bottom plan view;

Figure 4 is a still further enlarged detail section on line 4—4 of Figure 3; and

Figure 5 is a detail section on the same scale as Figure 4, on line 5—5 of Figure 4.

A circular drum housing includes a flat plate 10 integral at its periphery with a depending, cylindrical flange 12. Flange 12 terminates a short distance above the surface S to be cleaned, and extends about and encloses a rotary drum 14, having a flat plate disposed in closely spaced relation to and below the plate of the drum housing 10. The drum 14, at its periphery, is integral with a depending side wall 16, and as will be noted from Figure 2 and also from Figure 4, the side wall 16 tapers in a downward direction, being of a frusto-conical shape, thus to progressively reduce the diameter of the rotary drum 14 in a direction toward the bottom edge thereof.

Integrally or otherwise rigidly connected to the inner surface of the flange 12 is an inwardly projecting, circumferentially extending lip defining a trough 18, the inner periphery of which is inclined upwardly toward the plane of the plate 10, so that the drum housing is provided with an internal, annular trough, for a purpose to be made presently apparent.

Immediately above the inner periphery of the trough 18, the side wall 16 is formed with a circumferential series of outlet ports 20, so that water following the direction of the arrows in Figure 4 will pass through the outlet ports, into the trough, in a manner to be fully described hereinafter.

A center opening is formed in the drum housing, and fixedly engaged in said opening is a bearing sleeve 22, in which is journalled a tubular shaft 24 the lower end portion of which passes through a center opening in a flat, relatively thick backing plate 26 of a rotary brush generally designated at 27. Shaft 24 is fixedly secured to the backing plate 26 for rotating the same, and the lower extremity of the shaft is formed with an outwardly directed, circumferential flange 28 seating in a recess 29 of a circular, relatively thick brush member 30 formed of any suitable material readily pervious to the passage of water therethrough and adapted to apply a scrubbing action to the surface S. Thus, the material of the brush member 30 can be bristles, a sponge, etc., and except as necessarily required by the appended claims, it is not desired to limit the invention unduly by requiring any specific water-pervious, brush material. The brush includes shaft 24, plate 26, and brush member 30 as its component parts.

Referring now to Figure 3, and also to Figure 2, formed in the brush member 30 are spirally extending slots 31 regularly spaced about the center of the brush. The slots 31 have their inner ends spaced closely from the center post or shaft 24 of the brush 27, while the outer ends of the slots terminate close to the outer periphery of the brush member, and are trailing in respect to the inner ends of the slots, in the sense of direction of rotation of the brush. As a result, water fed through the shaft 24 into the recess 29 will, on high speed rotation of the brush member, be directed outwardly through the material of the brush and along the surface S, and will for the most part find its way into the slots 31, by centrifugal force. In this connection, the outer walls of the slots are provided with a sheet-like liner 32, impervious to the passage of water, so that any water finding its way into a particular slot is prevented from passing the slot and will instead

travel upwardly within the slot as shown by the arrows in Figure 2. In this connection, when viewed in cross section the slots are inclined obliquely to the axis of rotation of the brush member, in a direction such that the tops of the slots are radially spaced from said axis a greater distance than are the bottoms thereof. This provides inclines which aid in the passage of the water upwardly within the slots, so that said water ultimately passes into passages **34** formed in the backing plate **26**. The passages **34** are formed as an annular series of small openings pitched when viewed in cross section correspondingly to the slots as shown to best advantage in Figures 2 and 4.

In the outer periphery of the brush member there are formed closely spaced recesses **36** communicating with correspondingly spaced peripheral recesses **38** of the backing plate **26**. Recesses **36, 38** are regularly spaced through the full circumferences of the brush member and backing plate and are adapted to catch any water that may evade the slots, while being directed outwardly through the material of the brush member by centrifugal action.

For the purpose of rotating the brush **27** and its associated drum **14**, a pulley **39** is secured by a set screw or equivalent means to the upper extremity of shaft **24**, and trained thereabout is a drive belt **40**, lying in a horizontal plane and trained about a smaller, drive pulley **42** rotatable with a vertically disposed motor shaft **44** extending downwardly from an electric motor **46**, mounted upon an angular bracket **48** formed with a horizontal leg **50** secured to the plate of the drum housing.

At its lower end, the shaft **44** extends into a pump, having meshing gears **52** formed with teeth **54** wiping over the inner surface of pump housing **56** mounted upon and projecting outwardly from the depending flange **12** of the drum housing **10**. Pump housing **56** is formed (see Figure 2) with an inlet **58** communicating with trough **18**, so that water forced into the trough through ports **20** by centrifugal action will travel to the pump. It will be understood, in this connection, that the pump is per se conventional, and connected to the output of the pump is a hose **60** shown to best advantage in Figures 1 and 2.

Connected to bracket **48**, at a location spaced outwardly from the periphery of the drum housing, is a caster **62**, and also connected to the bracket **48** is a segmentally shaped handle mounting bracket **64** having transversely spaced walls between which is located the inner extremity of an elongated handle **66**. Handle **66** is pivotally connected to the bracket **64**, and the walls of the bracket **64** are formed with arcuate series of openings **68** any of which may be registered with a transverse opening of handle **66**, to permit the extension of a drop pin **69** through the selected, registering openings. In this way, the handle can be swung upwardly or downwardly, and can be releasably locked in selected positions to which it is swung, according to the desires of the user. The drop pin **69** is connected to a chain **70** to prevent loss thereof, said chain being connected to the handle **66**.

Secured to and projecting upwardly from the drum housing **10** is an upwardly tapering reservoir support housing or casing **72**. This covers the full area of the drum housing, and at its trailing side is integrally formed with a radially, outwardly projecting, downwardly opening extension **74** housing the drive pulley **42**.

Integrally formed upon the smaller, upper end of the reservoir support housing **72** in an inwardly directed, circumferentially extending flange or shoulder **76**, angularly related when viewed in cross section to the top edge portion of the housing **72**, to define a correspondingly shaped, circumferentially extending recess for a short rubber gasket **78** on which is seated a circular reservoir **80**. The reservoir is removably supported upon the reservoir support housing **72**, the gasket providing a cushioned seat therefor. Removal of the reservoir facilitates cleaning and emptying and to this end, the reservoir has a filler opening normally closed by a screw cap **81**.

In the flat top wall of the reservoir **80** there is formed a threaded center opening, engaging threads provided upon the upper end portion of a vertically disposed valve stem **82**, the upper extremity of which projects above the top of the reservoir and is provided with a knob to facilitate manual rotation of the same. To the lower extremity of the stem **82** there is secured an upwardly tapering valve **84**, adapted to seat against a depending neck **85** formed upon the bottom wall of the reservoir and extending to the upper end of the shaft **24**. The valve can be closed whenever the device is out of operation, to prevent loss of water, but when the device is in operation, the valve is opened to a selected extent. By adjusted positioning of the valve, the quantity and rate of flow of water through the neck **85** into the shaft **24** can be controlled as desired, and can be properly related to the output of the pump in a manner such as to control to a selected degree the velocity of the water forced downwardly through the shaft **24**. In other words, if the valve **84** is so positioned that the outlet of the reservoir is smaller in total area than the inlet thereof defined by the opening through which water is fed into the reservoir from the hose **60**, with the pump operating to pump more water into the reservoir than would normally flow freely out of the neck **85**, the velocity of the water as it travels downwardly within the shaft **24** will be increased.

The backing plate **26** is spaced downwardly a substantial distance from the top plate of the drum **14**, thus defining between the backing plate and the drum a chamber **86**.

In operation of the device, when the motor is turned on, the shaft **24** will be rotated at a rate of speed that may be predetermined by the manufacturer, and as a result, with the valve in open position water will flow downwardly within the shaft **24** into the recess **29**. Due to the centrifugal action of the rotary motion of the brush, said water, as it enters the material of the water-pervious brush member **30**, will travel upwardly toward the periphery of the brush member, to cooperate with the brush member in scrubbing the floor surface S. The water will then pass upwardly within the slots **31** through the annular series of outlets **34** provided in the backing plate **26**, and such water as does not find its way into the slots **31** will, for the most part, travel upwardly within the recesses **36, 38** at the periphery of the brush.

The water traveling upwardly within the recesses **38** and ports **34** will enter the chamber **86**, and due to the inclination of the side walls **16** of the drum, will travel upwardly as shown by the arrows in Figure 2, to pass through the outlets **20** of the drum into the trough **18**.

The water will thus be continuously fed to the input of the pump, and will be acted upon the pump in such a manner as to be pumped upwardly through the hose **60** into the reservoir, for recycling.

Of course, the details of construction may be varied, so that the downward flow of the water from the reservoir to the floor surface may be entirely by gravity, without any impetus given thereto. It is mainly important to note that the construction involves a rotary brush so designed that water will be fed to the center of the brush, to enter water-pervious material of the brush and be directed by centrifugal action toward the brush periphery, cooperating with the brush to clean the surface S, said water being fed, due to the particular formation of the brush, back to a pump to be recycled.

The invention has the highly desirable characteristic in that it is not necessary to connect the device to a source of water under pressure, thereby promoting the maneuverability and versatility of the device, since it is not necessary that an elongated hose be connected thereto, extending from such source of pressure. Further, of great importance is the fact that all water used for cleaning is recycled, so as to in effect cause the water to be first applied to the floor surface in the direct area in which the brush is moving, then utilized to clean the floor surface in cooperation with a scrubbing action of a rotary brush member, and then picked up after it has discharged its function, to be recycled for the purpose of

repeating the function. The floor is thus not left excessively wet, and at the same time there is a marked saving of water as well as the ability to use the device on any surface area that needs to be cleaned, regardless of the proximity or remoteness of said area in respect to a source of water.

It is believed apparent that the invention is not necessarily confined to the specific use or uses thereof described above, since it may be utilized for any purpose to which it may be suited. Nor is the invention to be necessarily limited to the specific construction illustrated and described, since such construction is only intended to be illustrative of the principles, it being considered that the invention comprehends any minor change in construction that may be permitted within the scope of the appended claims.

What is claimed is:

1. A rotary brush for a floor-washing appliance, comprising: a flat, horizontal backing plate having a center opening; a vertical tubular shaft engaged in said center opening and having a lower end projecting below the backing plate; a brush member secured to the underside of the backing plate and formed of a material pervious to water, the lower end of the shaft terminating above the underside of the brush member and the brush member having in its underside a center recess with which the shaft communicates at said lower end thereof, the brush member having a series of slots regularly spaced about said center recess and extending through the full thickness of the brush member, the backing plate having passages extending through the full thickness thereof in communication with the slots, the slots having inner ends spaced closely from the shaft and outer ends terminating close to the outer periphery of the brush member, the inner ends leading the outer ends in the sense of the direction of rotation of the brush, the slots being inclined, when viewed in cross section, obliquely to the axis of rotation of the brush member, in a direction such that the tops of the slots are radially spaced from said axis a greater distance than are the bottoms thereof, some at least of the passages being inclined correspondingly to the slots; and water-impervious liners covering one wall of the slots, said one wall of the several slots being those that are nearer the brush member periphery.

2. A rotary brush for a floor-washing appliance, comprising: a flat, horizontal backing plate having a center opening; a vertical tubular shaft engaged in said center opening and having a lower end projecting below the backing plate; a brush member secured to the underside of the backing plate and formed of a material pervious to water, the lower end of the shaft terminating above the underside of the brush member and the brush member having in its underside a center recess with which the shaft communicates at said lower end thereof, the brush member having a series of slots regularly spaced about said center recess and extending through the full thickness of the brush member, the backing plate having passages extending through the full thickness thereof in communication with the slots, the slots having inner ends spaced closely from the shaft and outer ends terminating close to the outer periphery of the brush member, the inner ends leading the outer ends in the sense of the direction of rotation of the brush, the slots being inclined, when viewed in cross section, obliquely to the axis of rotation of the brush member, in a direction such that the tops of the slots are radially spaced from said axes a greater distance than are the bottoms thereof, some at least of the passages being inclined correspondingly to the slots; water-impervious liners covering one wall of the slots, said one wall of the several slots being those that are nearer the brush member periphery; and a drum extending about the backing plate and brush member, including a flat top plate in a plane parallel to and spaced upwardly from the backing plate to define therebetween a chamber with which said passages communicate, and a depending side wall of inverted frustoconical shape at the top plate periphery enclosing said chamber and formed at the top of the chamber with a circumferential series of outlet ports, the side wall having an inclination in a direction generally corresponding to that of the slots to provide a slope extending upwardly outwardly from the brush axis to the outlet ports, for initial passage of water upwardly outwardly from said axis up slopes defined by the liners followed by passage of the water up the first named slope, said backing plate and brush member having registering peripheral recesses, the backing plate recesses communicating with the chamber at the bottom of the first named slope to provide auxiliary passages for catching, and directing to the first named slope, water that evades the slots while being directed outwardly by centrifugal action through the material of the brush member.

References Cited in the file of this patent

UNITED STATES PATENTS

1,211,948	Koster et al.	Jan. 9, 1917
2,003,216	Nadig	May 28, 1935
2,153,207	Petty	Apr. 4, 1939
2,495,686	Berberian	Jan. 31, 1950
2,633,595	Berberian	Apr. 7, 1953
2,680,260	Danielsson et al.	June 8, 1954
2,774,089	Brown	Dec. 18, 1956

FOREIGN PATENTS

150,940	Australia	Apr. 17, 1953
673,183	Great Britain	June 4, 1952