June 7, 1927. 1,631,142

J. H. MASTERS

WATER SUPPLY SYSTEM AND VALVE THEREFOR

Filed June 12, 1920

Fig. 1.

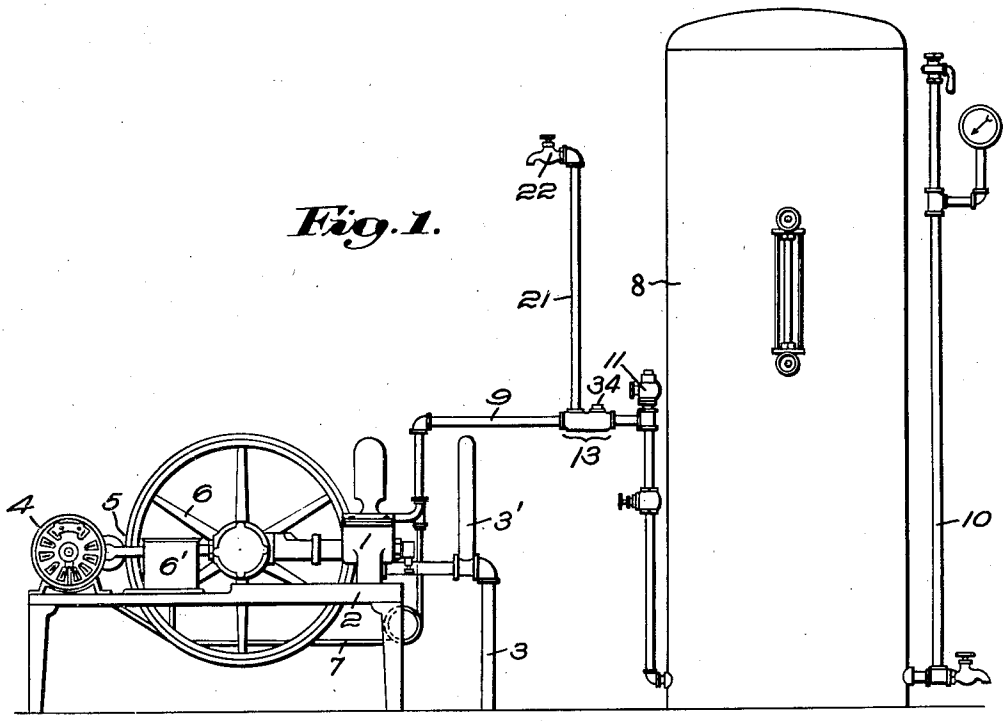

Fig. 2.

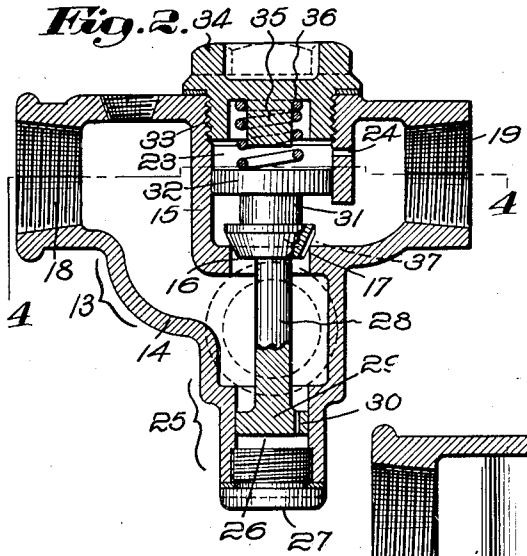

Fig. 3.

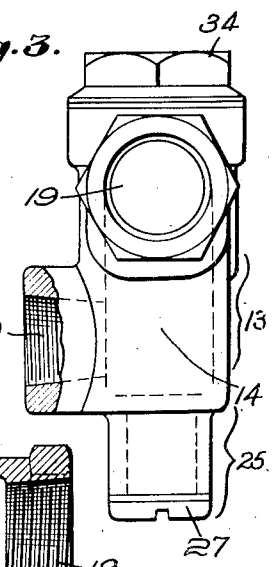

Fig. 4

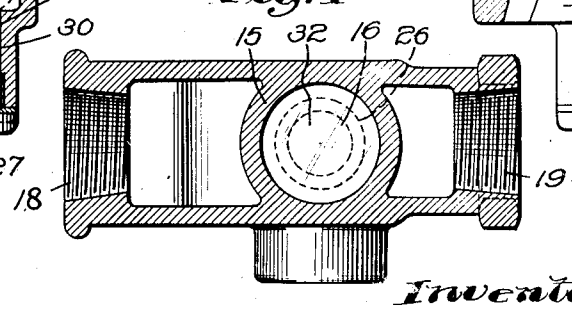

Inventor:
John Howard Masters
by Emery, Booth, Jamey and Varney Attys

Patented June 7, 1927. 1,631,142

UNITED STATES PATENT OFFICE.

JOHN HOWARD MASTERS, OF DAYTON, OHIO, ASSIGNOR TO THE VAILE-KIMES COMPANY, OF DAYTON, OHIO, A CORPORATION OF OHIO.

WATER-SUPPLY SYSTEM AND VALVE THEREFOR.

Application filed June 12, 1920. Serial No. 388,604.

This invention relates to water supply systems and valves therefor.

In order that the principle of the invention may be readily understood, I have disclosed a single embodiment of the system and of said valve in the accompanying drawing, wherein—

Fig. 1 is a side elevation, more or less diagrammatic, of a pneumatic water supply system showing a fresh water or direct pressure branch intermediate the pump and storage tank and indicating the improved valve of my invention;

Fig. 2 is a vertical transverse section of the improved valve used in and constituting a part of my system;

Fig. 3 is a side elevation of the valve casing shown in Fig. 2; and

Fig. 4 is a horizontal transverse section upon the line 4—4 of Fig. 2 and looking downward in said figure.

My invention particularly relates to an improved automatically controlled water supply system and valve therefor, primarily for domestic water service wherein the water from a static water supply source is pumped into a compression tank as a shortage supply under pressure, converting the static water in the tank to dynamic form at the fixtures or service outlets.

In accordance with my invention I combine in an improved manner the pneumatic water supply system with a direct pump pressure service or branch rendering the pumping apparatus and automatic controlling device of the pneumatic water supply service available for auxiliary purposes and uses to furnish a supply of fresh water direct from the well, or other main supply source, so that a joint or independent service of either can be had.

In accordance with my invention, I provide a water supply system including a storage tank and connected pumping apparatus for maintaining the tank water supply, with means interposed and connecting with the piping system between the pumping apparatus and the tank, and provide a branch circuit for a direct pump pressure supply water service, together with improved checking means for said tank against a drawing or tank draining counterflow of water, but non-interfering with the operation of the pressure-actuated motor-controlling device.

The improved checking means constituting a part of my invention eliminates all noise in the drawing of fresh water, and also provides a valve acting with certainty at all times, and thus overcomes objections incident to the operation of that type of checking means disclosed in the patent to Hugh W. Kimes, No. 1,247,544, dated November 20, 1917, and upon which this invention is an improvement.

Referring more particularly to the drawing and first to Fig. 1, I have therein indicated at 1 a pump mounted upon a support 2 and connected to any suitable water supply source by means of a pipe 3 and in series including a vacuum chamber fitting 3′. The pump is driven in any suitable manner and preferably by an electric motor 4 connected by a belt 5 with the fly wheel 6 of the pump. The motor is desirably controlled by a switch device 6′ operating under the influence of the pressure in the system for starting and stopping the motor. The electric switch mechanism may be of any well known type, and detailed description of its working parts need not be herein included. The said switch mechanism indicated generally at 6′ connects with the system pipe through a pipe 7, and the switch functions after the supply and pressure in the storage tank 8 has been reduced to a determined degree, for starting the motor in the pump and permitting the same to continue in operation until a predetermined storage supply and pressure is again restored. Any form of pump and automatically controlled power apparatus therefor may be used in the water supply system within the scope of the invention, and as such apparatus is well known in the art, a detailed description thereof is not necessary.

The pump 1 communicates with the tank 8 through the piping 9 for supplying water to the tank under the pressure of the pump, and I have indicated at 10 the pipe connection with the tank 8 as a service supply line leading to the various outlets. As the system is primarily intended for use as a domestic water supply outfit, the tank 8 is of a capacity to permit the usual water consumption requirements for a given period without calling for a continued operation of the pumping apparatus, and the tank is important to the successful operation for main-

taining a constant pressure to the service outlets.

The water in the tank 8 sometimes remains in storage for a sufficient period to raise its temperature above that directly furnished from a supply source, which is due to a small consumption of the water in storage, and therefore it is sometimes desirable to have a fresh water supply independent of the tank, which may be utilized as a direct outlet for a continued consumption of water without exhausting the storage supply and supplied under direct pumping pressure for a cold water supply.

It is desirable for the safety of the system to install a relief valve, and I have indicated such a valve at 11 as connected in series with the pipe system 9 leading from the pump to the storage tank. The said relief valve is controlled by the influence of the varying pressure in the system, opening to relieve or prevent any excessive system pressure and an escape of the water supply from the pump principally due to the continuing operation of the pump by reason of the automatic switch or other motor controlling devices failing promptly to respond to an effective or influencing degree of pressure. Desirably for this purpose I use a relief valve such as shown in the said patent to Kimes, No. 1,247,544.

In providing a fresh water or continued supply branch in connection with a pneumatic water supply system including a storage tank and providing a supply independent of the storage tank, I provide improved water check devices in series with the piping between the pumping apparatus and the tank, non-interfering to or with the pressure influencing devices, or capable of approximately checking a counterflow or escape of the storage water in the tank and operating with certainty and substantially without noise. Such improved checking device I have indicated generally at 13, it being placed in series with the system piping between the pump and tank. Such water check device or fitting, as most clearly indicated in Figs. 2, 3 and 4, comprises a body 14 constituting also a pipe coupling providing a water check valve between the tank and the pump. A web 15 desirably integral with the body 14 extends across the chamber of the body to divide the same and is provided with a suitable opening 16 constituting a valve seat, or if desired equipped with a separate valve seat, to receive a suitable valve 17 herein represented as vertically positioned, so as to operate in whole or in part by gravity.

The body 14 is provided with a threaded opening 18 communicating with the pipe system 9 leading from the pump 1 and is also provided with a threaded opening 19 communicating with that portion of the piping system 9 leading to and communicating with the tank 8. The body 14 is also provided with an opening 20 from which leads a pipe 21 for a direct fresh water supply branch extending to the service point desired with the delivery capacity of the pump and provided with suitable valves or cock controlled outlets.

I have herein represented the pipe 21 more or less diagrammatically as extended upwardly and provided with a cock 22 for sealing the branch when not in use, so as not to interfere with the normal operation of the system.

The upper part of the web 15 is desirably cylindrical in transverse section, as indicated in Figs. 2 and 4, so as to provide a chamber 23 above the valve 17, and in such cylindrical portion of the web 15, I provide one or more small openings indicated at 24 in Fig. 2. The body portion 14 is preferably prolonged downwardly as indicated at 25 in Fig. 2, so as to provide a chamber 26 below the bottom of the valve, such chamber preferably being closed by a threaded nut 27.

Preferably the check valve 17 is provided with a stem 28 extending into the prolongation 25 and is there provided with a piston-like enlargement 29 having a small opening 30. Above the head of the valve 17 I provide a reduced part 31 terminating in a piston-like enlargement or head 32 fitting snugly within the cylindrical part of the web 15, as clearly indicated in Fig. 2. The inner face of the cylindrical portion of the web 15 is threaded as indicated at 33 in Fig. 2 to receive a threaded nut 34 which if desired may be recessed to provide a central projection 35 receiving about it a coiled spring 36, which is thus positioned between the said nut 34 and the upper surface of the piston-like head 32 of the valve 17.

Preferably the head of the valve 17 is provided with a suitable opening, such as a slot or groove 37 to keep the water pressure equalized on both sides of the valve. If the passage 37 were not employed in some suitable embodiment thereof, and the fresh water fixture leaked or was not turned off tight, so that the water continued to run slightly, the pump 1 would start and would thereafter continue to start and stop. The presence of the passage 37 permits the water from the tank to flow past the valve and equalize the pressure upon both sides of such valve, thus eliminating improper starting and stopping of the pump 1.

In certain earlier embodiments of a system for the same general purpose as that herein disclosed,—that is, for permitting cold water to be drawn directly from the source of supply through the action of a pump, instead of from the storage tank, difficulty was experienced in that every beat of the pump caused a pulsation of water

in the discharge line therefrom, and the check valve employed to permit the proper functioning of the system in drawing off fresh water, would work with such pulsations, thereby lifting from its seat with such force as to cause a metallic click. This not only caused an improper operation of the system in that the check valve was constantly opened improperly, but an exceedingly objectionable noise resulted.

By the construction herein disclosed, I have entirely overcome the objections above set forth.

The piston-like parts 29 and 32 of the check valve structure guide the valve 17 both at top and bottom and cause it under all conditions of operation to seat correctly. The holes 24 and 30 in the web 15 and the piston-like head 29 respectively, permit water of the system to enter the chambers or pockets 23, 26, thereby in operation wholly preventing the valve 17 from moving with pulsations of the pump 1 as heretofore. This not only results in correct operation of the valve, but it wholly eliminates the objectionable noise above referred to. The coil spring 36, bearing, as it does, upon the piston-like portion 32 of the check valve, tends to keep such valve more stable and prevent its being improperly moved from its seat.

In operation, it will be assumed that the tank 8 has been filled to its capacity and under a predetermined pressure that will automatically stop the pumping apparatus and permit the valve 17 to seat. Should it, however, be desirable to draw fresh water, as for drinking purposes, the cock 22 of the fresh water supply branch 21 is opened, thus immediately lowering the pressure in the pipe 9 between the check valve 13 and the electric switch mechanism 6′, thus starting the motor, which operates the pump and forces the fresh water through the pipe 21 and the service outlet. The pumping apparatus continues in operation during such service period.

Upon closing the cock 22, the pressure in the system pipe or service line is increased to that degree which influences the switching device for throwing the pumping apparatus out of commission, provided there has been no appreciable loss or reduction in the tank pressure or consumption of the static water supply, and if such loss or reduction has occurred, it is restored before the pumping apparatus stops.

By the construction herein disclosed, I am enabled with certainty of action and without noise in the system, to get an abundant supply of fresh water direct from the well or other source at will for any desired purpose.

Having thus described one illustrative embodiment of my invention, I desire it to be understood that although specific terms are employed, they are used in a generic and descriptive sense and not for purposes of limitation, the scope of the invention being set forth in the following claims.

Claims:

1. In a water check device for a water supply system, a valve casing having a web therein, a portion of which web is transverse to the axis of the valve and is provided with a valve opening, and a portion of which web, constituting an upward continuation of said transverse portion, extends lengthwise the stem of said valve and constitutes a prolonged, substantially cylindrical, receiving and guiding portion at one side of the valve, a valve seated in said opening and having upon its stem above said valve opening a piston-like portion received and guided by said lengthwise extending portion of said web, and means to permit water of the system to pocket between the said piston-like portion and the valve casing.

2. In a water check device for a water supply system, a valve casing having a web therein, a portion of which web is transverse to the axis of the valve and is provided with a valve opening, and a portion of which web, constituting an upward continuation of said transverse portion, extends lengthwise the stem of said valve and constitutes a prolonged, substantially cylindrical, receiving and guiding portion at one side of the valve, a valve seated in said opening and having upon its stem above said valve opening a piston-like portion received and guided by said lengthwise extending portion of said web, and means to permit water of the system to pocket between the said piston-like portion and the valve casing, said piston-like portion being of greater cross sectional area than the valve and thereby serving effectively to guide the latter without binding.

3. In a check device for water supply systems, a valve casing 14 having a prolonged, substantially cylindrical web 15 and an opening 16 in a transverse bottom portion of said web, a valve 17 adapted to seat in said opening and having piston parts 29, 32, respectively below and above the said valve and adapted to slide in water-pocketing portions of said casing 14 and web 15 respectively, and means to admit water of the system to the outer faces of the piston parts 29, 32.

4. In a check device for water supply systems, a casing 14 having a web 15 provided with a prolonged, cylindrical portion having an opening 24, said web 15 having in a transverse bottom part thereof a valve opening 16 and a valve 17 adapted to seat in said opening and having piston portions 29, 32 respectively below and above the said valve and adapted to slide in water-pocket-

ing portions of said casing 14 and web 15 respectively, the said piston portion 29 having an opening 30.

5. In a check device for water supply systems, a casing 14 provided with a prolonged, substantially cylindrical web 15 having a valve opening 16 in a transverse bottom portion of said web, a valve 17 adapted to seat in said valve opening 16 and having a water passage 37, said valve having piston heads at each end constituting guiding means, one of which is guided by the casing 14 and the other by said cylindrical web 15, and means to admit water of the system at the outer faces of both the piston heads, as and for the purpose set forth.

6. In a water check device for a water supply system, a valve casing having a web therein, said web being provided with a cylindrical guiding portion and having a continuous bottom portion below and transverse to said guiding portion and provided with a valve opening, a valve adapted to be seated in said opening and having a greatly enlarged piston-like portion received in and guided by said cylindrical portion, the stem of said valve extending below said transverse portion of said web and having an enlarged end, a closed portion provided directly in said casing to receive the lower enlarged end of said valve stem, and means to admit water of the system above said piston-like portion and also below said enlarged end.

7. In a water check device for a water supply system, a valve casing having a web therein, said web being provided with a cylindrical guiding portion, and having a continuous bottom portion below and transverse to said guiding portion and provided with a valve opening, a valve adapted to be seated in said opening and having a greatly enlarged piston-like portion received in and guided by said cylindrical portion, the stem of said valve extending below said transverse portion of said web and having an enlarged end, a closed portion provided in said casing to receive the lower enlarged end of said valve stem, and means to admit water of the system above said piston-like portion and also below said enlarged end, the valve being provided with a leak port 37 to equalize the water pressure at both faces of the valve.

8. In a water check device for a water supply system, a valve casing having a web therein provided with a cylindrical guiding portion, said web having, as a direct continuation thereof, a portion below and transverse thereto and provided with a valve opening, a valve adapted to be seated in said opening and having a greatly enlarged piston-like portion received in and guided by said cylindrical portion, the stem of said valve extending below said transverse portion of said web and having an enlarged end, a closed portion provided in said casing to receive the lower enlarged end of said valve stem, and means including an opening in said cylindrical portion and an opening in said lower enlarged end of the valve stem to admit water of the system above said piston-like portion and also below said enlarged end, so that the water may pocket at both ends of the valve stem.

9. In a water check device for a water supply system, a valve casing having a web therein provided with a cylindrical portion, said web having as a direct continuation thereof a portion below and transverse thereto, and provided with a valve opening, a valve adapted to be seated in said opening and having a greatly enlarged piston-like portion received in and guided by said cylindrical portion, the stem of said valve extending below said transverse portion of said web and having an enlarged end, a closed portion provided in said casing to receive the lower enlarged end of said valve stem, and means including an opening in said cylindrical portion and an opening in said lower enlarged end of the valve stem, to admit water of the system above said piston-like portion and also below said enlarged end, so that the water may pocket at both ends of the valve stem, the valve being provided with a leak port 37 to equalize the water pressure at both faces of the valve.

In testimony whereof, I have signed my name to this specification.

JOHN HOWARD MASTERS.