(No Model.) 3 Sheets—Sheet 1.

H. H. SESSIONS.

CURTAIN FOR SLEEPING CAR BERTHS.

No. 456,292. Patented July 21, 1891.

Fig. 1.

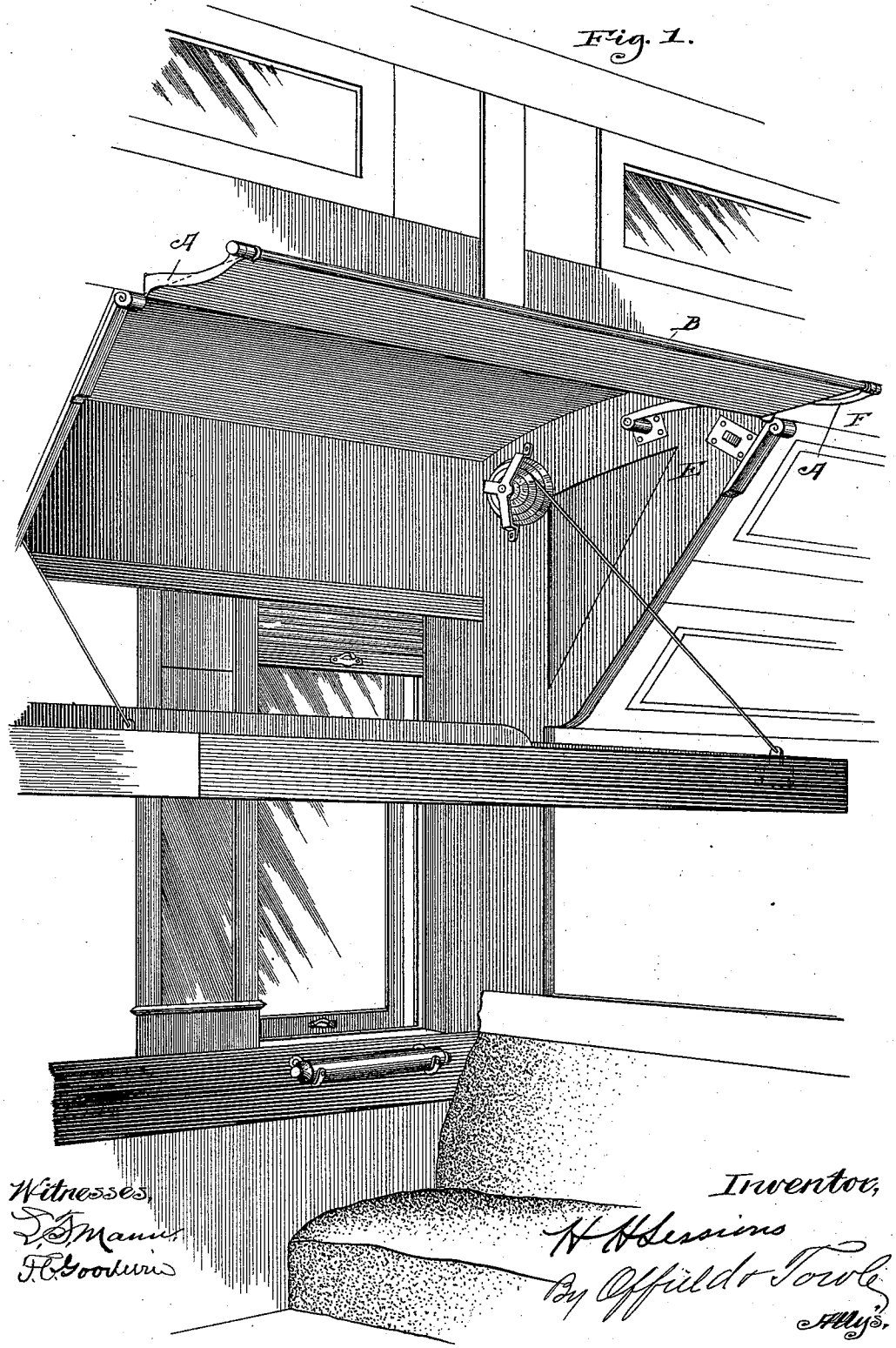

Witnesses,
D. S. Mann
F. C. Goodwin

Inventor,
H. H. Sessions
By Offield & Towle
Att'ys.

THE NORRIS PETERS CO., PHOTO-LITHO., WASHINGTON, D. C.

(No Model.) 3 Sheets—Sheet 2.

H. H. SESSIONS.

CURTAIN FOR SLEEPING CAR BERTHS.

No. 456,292. Patented July 21, 1891.

Fig. 2.

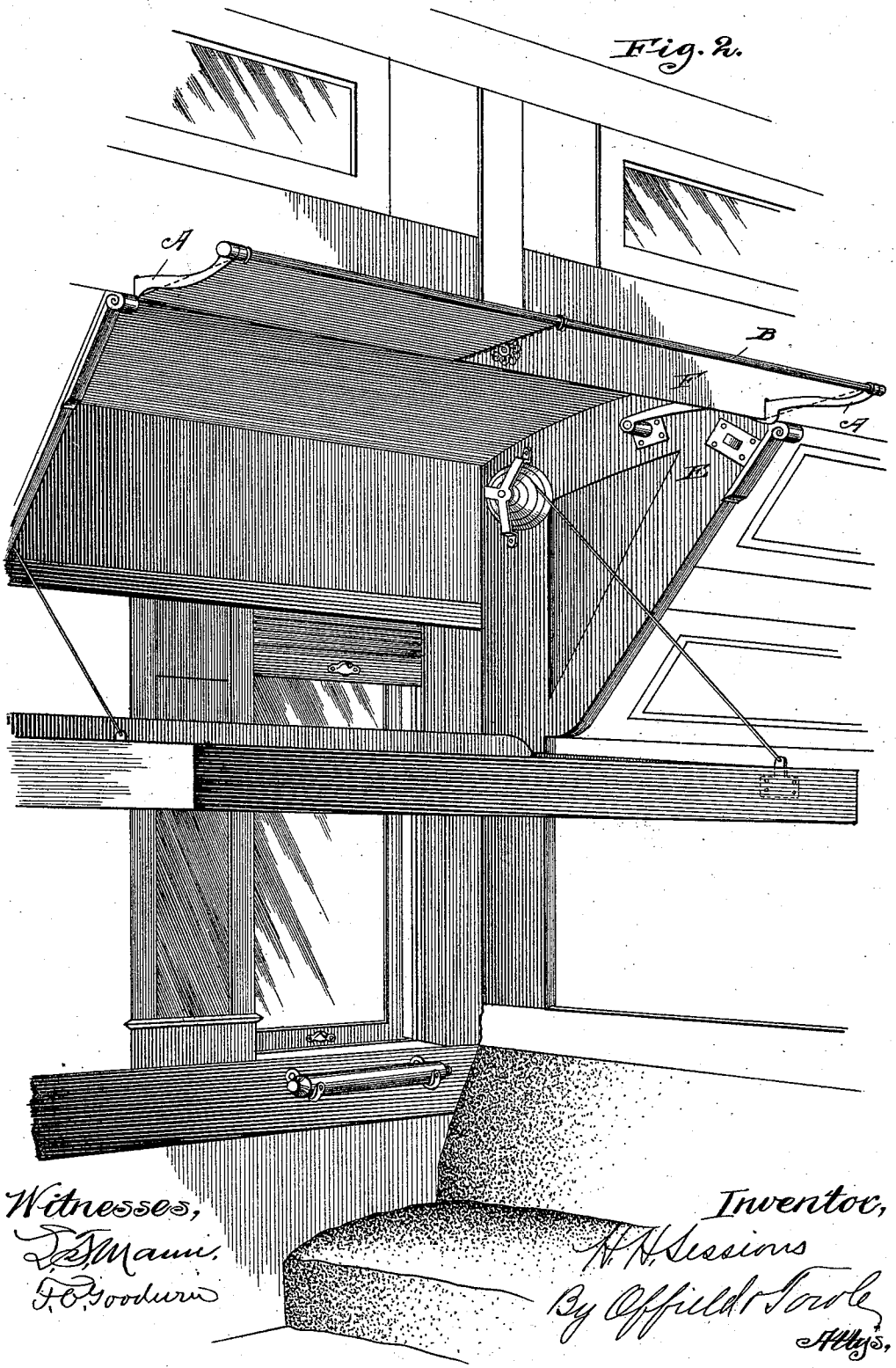

Witnesses,
D. S. Mann.
F. O. Goodwin

Inventor,
H. H. Sessions
By Offield & Towle
Attys.

THE NORRIS PETERS CO., PHOTO-LITHO., WASHINGTON, D. C.

(No Model.) 3 Sheets—Sheet 3.

H. H. SESSIONS.

CURTAIN FOR SLEEPING CAR BERTHS.

No. 456,292. Patented July 21, 1891.

Fig. 3.

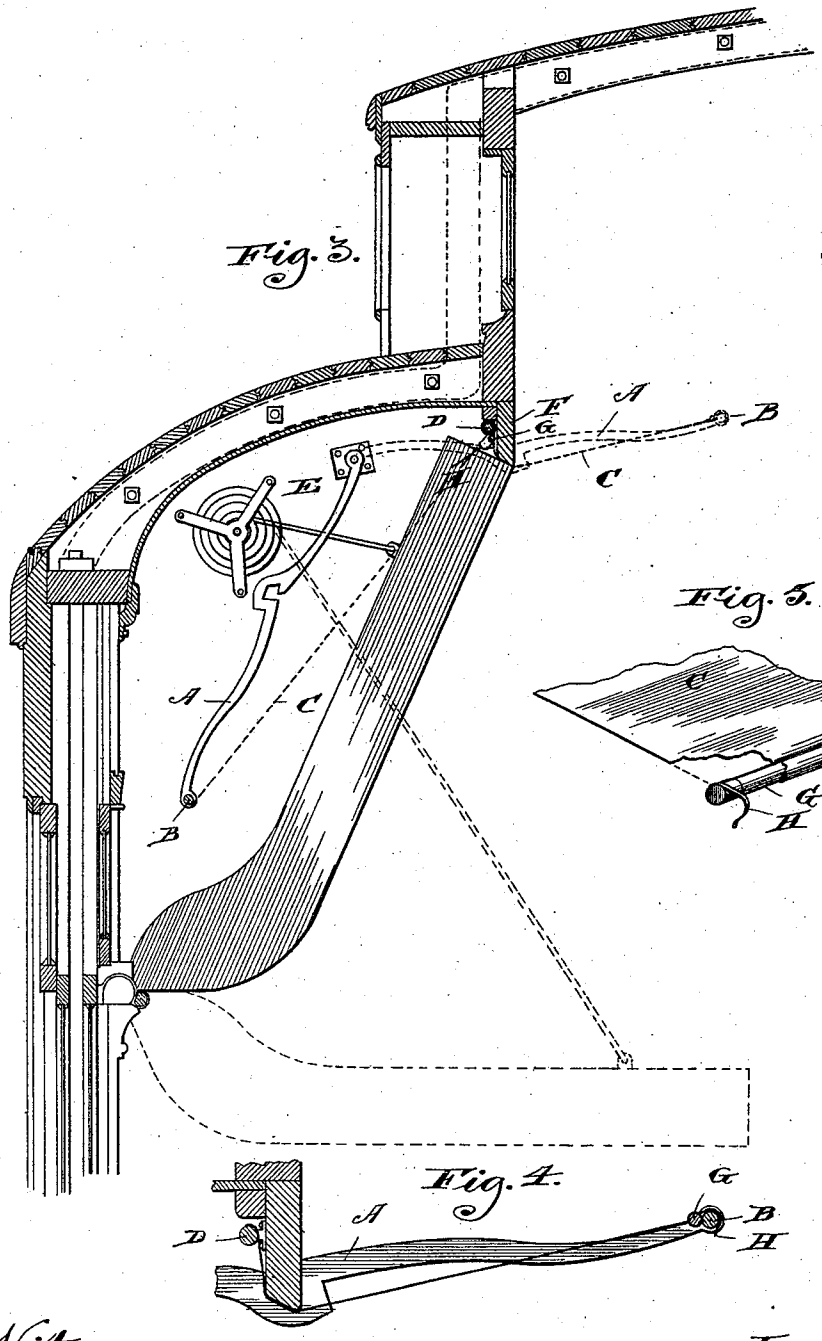

Fig. 5.

Fig. 4.

Witnesses,
D. S. Mann.
F. B. Goodwin

Inventor,
H. H. Sessions
By, Offield & Towle
Attys.

THE NORRIS PETERS CO., PHOTO-LITHO., WASHINGTON, D. C.

UNITED STATES PATENT OFFICE.

HENRY HOWARD SESSIONS, OF CHICAGO, ILLINOIS, ASSIGNOR TO THE PULLMAN'S PALACE CAR COMPANY, OF SAME PLACE.

CURTAIN FOR SLEEPING-CAR BERTHS.

SPECIFICATION forming part of Letters Patent No. 456,292, dated July 21, 1891.

Application filed October 13, 1890. Serial No. 367,889. (No model.)

To all whom it may concern:

Be it known that I, HENRY HOWARD SESSIONS, a citizen of the United States, residing at Chicago, Illinois, have invented certain new and useful Improvements in Curtains for Sleeping-Car Berths, of which the following is a specification.

My invention relates to a means for closing the space between the deck and the curtain-rods used to support the curtains employed in sleeping-cars to inclose the berths.

The object of my invention is to exclude drafts of air from the deck-windows, dust, and the light from the lamps, which, as usually placed, are in about the plane of the upper berths, and also to secure greater privacy to the occupant of the upper berth.

In carrying out my invention I prefer to employ a flexible curtain or shade of cloth attached to a spring shade-roller, and to journal the roller just inside the finish-rail, against which the outer edge of the upper berth abuts when not in use. The free margin of the curtain will be adapted for securement with the curtain-rods by means of hooks or some other convenient fastening. These curtains are preferably made of half the length of the berth, so that the occupant thereof may exclude the air or the rays of light from the lamp from one end of the berth. In use the curtain is readily drawn out and secured to the curtain-rod, and when disengaged therefrom the spring will return it, winding it upon the roller, the whole being concealed during the day by the closing of the upper berth. Where curtain-rods are supported upon arms adapted to swing or to be pushed back into the upper-berth space, the curtain or shade above described may have its free edge secured with the rod, so as to be withdrawn into the berth-space therewith.

In the accompanying drawings, Figure 1 is a broken perspective view of the interior of a sleeping-car, showing the upper berth lowered and the curtain drawn out and secured with a curtain-rod, which in the illustration is supported upon swinging arms so as to be swung into the berth-space. Fig. 2 is a similar view showing a curtain of half the length of the berth drawn out and secured to the curtain-rod. Fig. 3 is a sectional view showing the berth made up, the curtain-rod folded into the berth-space, and the curtain wound upon its roller. Fig. 4 is a detail showing the outer end of the swinging arm in side elevation, with the curtain drawn out and connected to the curtain-rod borne by said arm, and Fig. 5 is a broken perspective of one corner of the curtain, showing a hook applied thereto for securing it to the rod.

In the drawings, A indicates the bracket-arms upon which the curtain-rods B are secured, said arms in the present instance being adapted to swing on their pivotal connection with the berth-partitions, so as to be inclosed in the berth-space during the day.

C represents the curtain, which in this instance is secured to a spring-roller D, journaled in the partitions E or on the finish-rail F. The free margins of the curtain may have the rod or bar G, and to this rod may be applied hooks H. When the berth is lowered, as shown in Figs. 1 and 3, the curtain C may be drawn out and its hooks made to engage the curtain-rod, thereby inclosing the entire space heretofore left open between the upper ends of the usual curtains and the deck. By this means drafts of cold air, the rays of light from the lamps, and any dust which may be brought in by the air-currents through the deck-windows are effectually excluded, and it is also made impossible for the occupant of one upper berth to look in upon a person occupying the adjoining upper berths.

I do not of course limit my invention to the precise details of construction herein pointed out, as the same may be varied without departing from the spirit of my invention.

I claim—

1. In a sleeping-car having hinged upper berths, curtain-rods adapted to support side curtains, an overhead curtain having one margin thereof secured within the upper-berth space and adapted to be extended and have its opposite margin secured with the curtain-rod, whereby to inclose a space be-

tween the deck and the side curtains, substantially as described.

2. In sleeping-cars, the combination, with a curtain-rod, of a curtain secured to a spring-roller and said roller journaled in the berth partitions or brackets behind the finish-rail, and the curtain being adapted to be extended to inclose a portion or all of the space between the deck and the usual curtains, substantially as described.

HENRY HOWARD SESSIONS.

Witnesses:
FREDERICK C. GOODWIN,
N. M. BOND.