P. E. WINNERTZ AND F. E. NEUBERT.

DEVICE FOR MANUFACTURING OBJECTS OF PAPER FIBRIN.

APPLICATION FILED NOV. 24, 1916.

1,401,979. Patented Jan. 3, 1922.

Fig. 1.

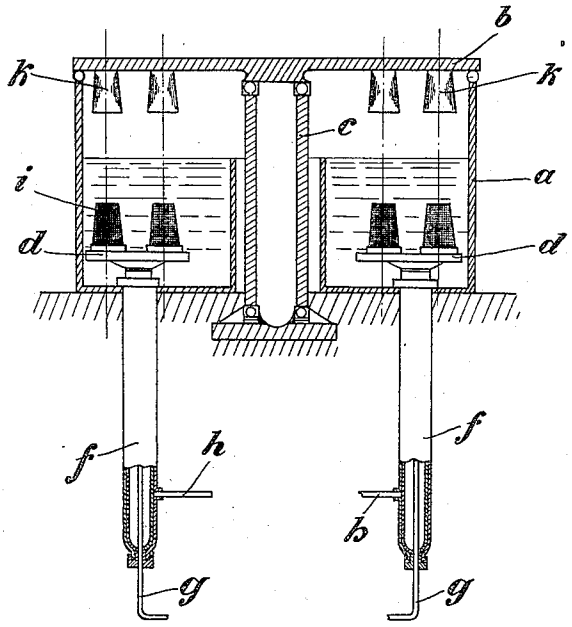

Fig. 2.

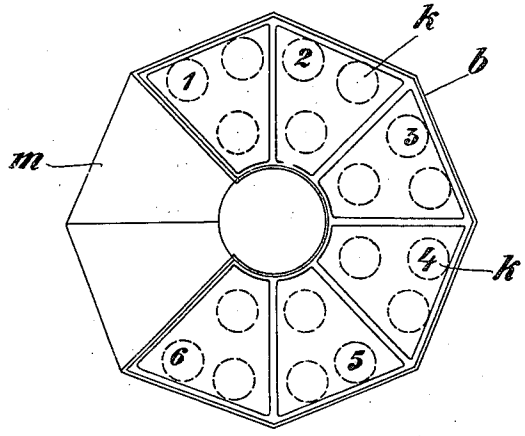

Inventors:-
Peter Ernst Winnertz and
Fritz Eugen Neubert.
By:- B. Singer, Atty.

UNITED STATES PATENT OFFICE.

PETER ERNST WINNERTZ AND FRITZ EUGEN NEUBERT, OF PENIG, GERMANY; SAID NEUBERT ASSIGNOR TO SAID WINNERTZ.

DEVICE FOR MANUFACTURING OBJECTS OF PAPER FIBRIN.

1,401,979. Specification of Letters Patent. Patented Jan. 3, 1922.

Application filed November 24, 1916. Serial No. 133,270.

(GRANTED UNDER THE PROVISIONS OF THE ACT OF MARCH 3, 1921, 41 STAT. L., 1313.)

To all whom it may concern:

Be it known that we, PETER ERNST WINNERTZ and FRITZ EUGEN NEUBERT, engineers, citizens of the German Empire, residing at Penig, in the Kingdom of Saxony, Germany, have invented new and useful Improvements in and Relating to Devices for Manufacturing Objects of Paper Fibrin, (for which we have filed applications in Germany 28th of Dec., 1915, and 8th of April, 1916,) of which the following is a specification.

Our present invention refers to improvements in and relating to devices for manufacturing objects of paper-fibrin. With objects of this kind hollow bodies are especially concerned, intended to serve as receptacles for packing and forwarding objects and goods of different kinds, f. i. corn, flour and chemicals in the shape of powder or pieces, furthermore also as receptacles for sugar-loafs, violin-cases and other receptacles which must have a determined shape matching the object to be packed, and the like.

Our invention particularly relates to proceedings and devices of that kind, whereby the hollow bodies are obtained from thin solutions of paper-fibrin in several coats of paper-fibrin by precipitation of the coats of fibrin upon wire-cloth forms, couching the single coats of paper-fibrin, precipitated upon the wire-cloth forms, in suitable top-forms and sucking or squeezing off the exceeding liquid. By felting the different couched thin layers of the fibrin coats, solid hollow bodies of paper-fibrin provided with bottoms are produced in known manner which bodies, when pressed, dried and, in case of need, provided with a coating preserving them from humidity, may serve the most different purposes. In this operation the formation of the hollow bodies is obtained by the shape and formation of the wire-cloth and the top forms which latter may, totally or partly, consist in already known manner, as described in other patents, of elastic, inflatable material and be provided with convenient trays. According to the desired thickness of wall of the hollow bodies to be manufactured of paper-fibrin, a greater or smaller number of layers of fibrin must be couched upon each other, to which purpose a plurality of different trays must be made use of. Whereas with the known devices these moulds were arranged in one or several parallel rows one behind the other, these forms are, according to our new invention, arranged in a row closed in itself, f. i. radially in a circle one behind the other. The corresponding moulds are then shifted by a suitable mechanical, f. i. electromotoric drive against each other or, with the radial arrangement turned round an axis, in such manner that all wire-cloth forms are simultaneously introduced into the top forms so that at each time a plurality of hollow bodies is advanced by a step in their completion and that in each turn of the machine at each feeding movement a ready set of bodies can be taken out of the device. In the same closed succession of operations the device may produce, according to another embodiment of the invention in addition to the absorption of the exceeding liquid out of the fibrin water, simultaneously the squeezing-off of the water and the drying of the hollow bodies in special departments or on particular working tables of the device, so that the hollow bodies may finally leave the device in a state ready for use. The final drying of the hollow bodies is in this case effected by heated moulds which heating may be carried out by steam, gas or the electric current. The manufacture of hollow bodies of paper-fibrin in masses is quickened, facilitated and improved by the new arrangement and the floor-space required for the device is thereby considerably reduced.

By the closed succession of operations, granted by the arrangement according to the present invention, it is possible, after the starting of the work, to withdraw in each single couching operation a plurality of hollow bodies from the machine, corresponding to the number of moulds arranged in every section of the plant, because as many couchings will successively take place on the machine as the ready hollow bodies are to

present layers of fibrin. In all working sections of the couching departments of the machine new series of hollow bodies are incessantly brought nearer to completion. By using for the different layers of fibrin in the hollow bodies differently composed, more or less diluted or also differently stained fibrin-water, the kind and the thickness of the layers of fibrin to be couched in succession and, with it, the nature and the thickness of wall of the ready hollow bodies may be varied in a determined, desired manner. For instance, it is thereby possible to produce in masses hollow bodies having as much as possible uniform total thickness of wall, the equalization being attained by one or several, thicker or thinner, layers of fibrin made of fibrin-water of a corresponding density.

The drawing shows in a schematic manner the working of an embodiment of the present invention. In it only those parts have been drawn which are indispensable for the understanding of the device. Mechanical and constructive details have not been drawn. Consequently the drawing refers only to an embodiment which may be altered and constructively modified in many a way.

Fig. 1 shows schematically in a longitudinal cut a device for manufacturing conical hollow bodies;

Fig. 2 shows in a top-view a model of the working departments of the device for manufacturing hollow bodies.

In the shown embodiment of the invention always 6 sets of 3 wire-cloth and top forms each are working together.

In the annular fibrin-water-receptacle *a* the wire-cloth forms *i* co-operating with the top-forms *k*, are provided for upon plates *d*, adapted to be hydraulically lifted. In this arrangement the top forms *k* are secured to a rotating disk *b*, journaled upon a column *c*. The wire-cloth forms are moved by the cylinders *f* of the hydraulic presses, provided with the pipings *h* for sucking in the air and the delivery pipings *g* and at the same time the fibrin-water is sucked through the wire-cloth forms *i*, for the purpose of forming layers of fibrin upon the wire-cloth forms. For manufacturing hollow bodies of a determined thickness of wall, the wire-cloth forms and the corresponding top forms have different inner and outer diameters which in the progress of the work are varied for about the thickness of the layer of fibrin couched into the preceding top forms. For this purpose top forms are conveniently provided with interchangeable trays secured to them. These trays are expelled, either automatically or by hand, out of the top forms arriving in turn above the table *l* and containing the objects of the desired thickness of fibrin. In the movement of the rotating part of the device new trays are inserted at the table *m* into the emptied top forms and the work is going on as before. The expulsion of the trays out of the top forms may f. i. be done in known manner by releasing the mechanically barred trays by the striking against a lever in front of or at the table *b* and are automatically expelled out of the set of top forms arriving above the table. But in case of need the trays may electro-magnetically be retained in the top forms and released by demagnetization or reversal of magnetism.

The top-forms and their trays may in known manner be made of two or more parts. The top forms may, instead of being provided with trays, be of different designs and interchangeable above the table *l*. For this purpose the top forms may be connected, f. i. to the plate *b*, by guides, by a bayonet-clutch or in similar manner.

Whereas with the shown embodiment of our invention the squeezing-off of the surplus water and the complete drying of the hollow bodies has to be operated outside the shown device, bodies consisting of few layers of fibrin may, in the first line, be pressed dry in special departments of the device and made ready thereupon. With such a device two or three sets of wire-cloth forms would be existing for the couching process proper in the manufacture of 2 or 3 layers of fibrin, when other departments, f. i. 2 or 3 of them, would serve for squeezing off the water by means of the wire cloth forms which are introduced into the top forms and to these squeezing tables are connected other drying tables, upon which the already pressed hollow bodies are completely dried by the insertion of suitably heated under-forms into the top forms, so that the ready hollow bodies will arrive upon the delivery-table, connected to the drying tables.

The top forms may also be moved against the bottom forms, although the reverse arrangement will prove more fitted for the purpose.

It is neither absolutely necessary that the forms be arranged radially round a rotating axle. The tables might also be grouped elliptically instead of in a circle, whereby a conveniently arranged feeding movement ought to be provided for. The closed succession of the operation can also be attained by the arrangement of movable forms fastened to an endless chain with a simultaneous convenient arrangement of the corresponding wire-cloth forms and the like according to the principles of the present invention.

What we claim as our invention and desire to secure by United States Letters Patent is:—

An apparatus of the character described comprising in combination a pulp vat, wire molds within said vat, hydraulically operated tables supporting said molds, means for

sucking the pulp against the outer faces of said molds, a central standard, a disc journalled on said standard constituting the cover for the vat, and exchangeable forms secured to said disc and cooperating with the hydraulically lifted wire molds for forming the articles, substantially as described.

In testimony whereof we have signed our names to this specification in the presence of two subscribing witnesses.

PETER ERNST WINNERTZ.
FRITZ EUGEN NEUBERT.

Witnesses:
LEO BERGHOLZ,
ARTHUR STANGE.