March 26, 1968 D. RICHARDS ET AL 3,374,679

MISSILE FLIGHT SIMULATOR

Filed July 14, 1965 2 Sheets-Sheet 1

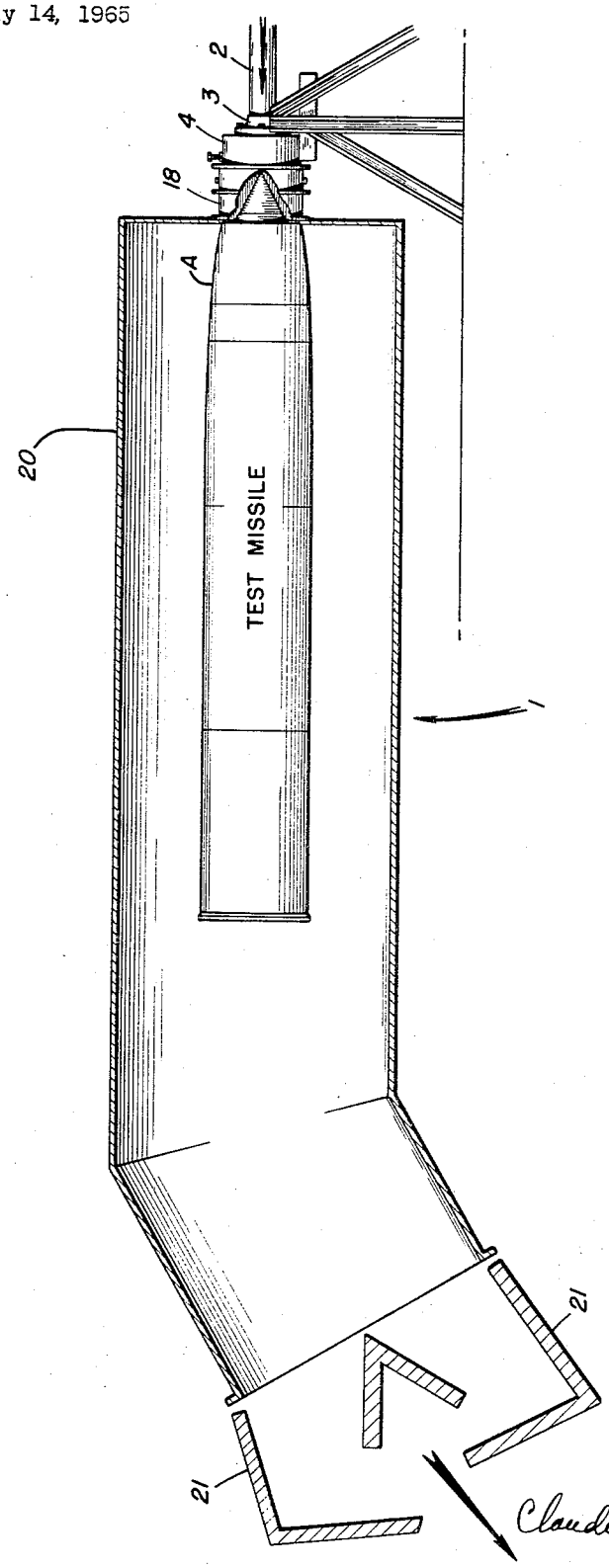

FIG. 1.

DENNIS RICHARDS
FRANK BADER
GEORGE P. MAGGOS
INVENTORS

Claude Lumbhouser
ATTORNEY

March 26, 1968 D. RICHARDS ET AL 3,374,679

MISSILE FLIGHT SIMULATOR

Filed July 14, 1965 2 Sheets-Sheet 2

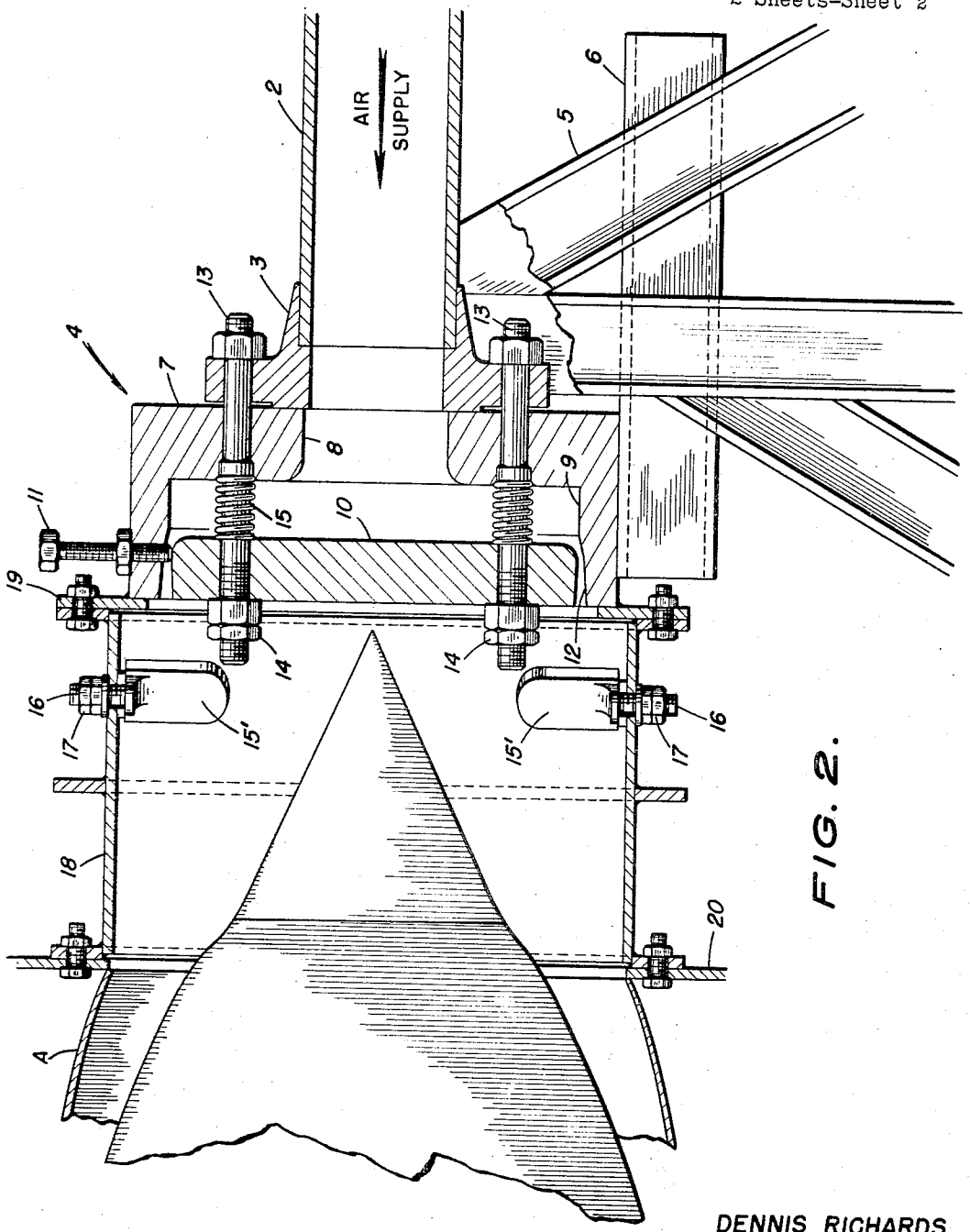

FIG. 2.

DENNIS RICHARDS
FRANK BADER
GEORGE P. MAGGOS
INVENTORS

BY
Claude Funkhouser
ATTORNEY

United States Patent Office

3,374,679

Patented Mar. 26, 1968

1

3,374,679
MISSILE FLIGHT SIMULATOR

Dennis Richards, Garrett Park, and Frank Bader and George P. Maggos, Silver Spring, Md., assignors to the United States of America as represented by the Secretary of the Navy

Filed July 14, 1965, Ser. No. 472,070
8 Claims. (Cl. 73—432)

ABSTRACT OF THE DISCLOSURE

The present invention provides apparatus for testing a missile under wide conditions of airflow turbulence and vibration frequencies. According to the invention, high pressure air is passed through an acoustic generator which directs a desired pattern of turbulent airflow through and about the inlet, diffuser and combustor of a missile mounted in a test tunnel. Means are provided for producing a wide range of test frequencies.

The present invention generally relates to an apparatus for simulating flight conditions in the inlet, diffuser, and combustor of a missile engine. More particularly, the invention concerns an apparatus which forces turbulent high pressure air through the inlet of a missile to thereby simulate acoustic vibrations similar to those experienced under actual flight conditions.

Previous missile flight simulating systems have been devised which produce variable airflow pressure distributions upon the components of airframe structures. In the previously devised systems, the airflow rates are variable to control static pressure upon the airframe structures to be tested. To alter flow patterns of the incoming air, these systems employ a series of screens having perforations for creating disturbances in the airflow pattern, thereby simulating static disturbances attributable to the airframe structures under actual flight conditions. These previously devised systems, however, do not simulate a wide range of turbulent air vibrations and acoustic disturbances experienced in actual missile flight. The present invention provides a missile flight simulator for testing a missile under wide conditions of variable airflow turbulence and vibration frequencies. Briefly, high pressure test air is expanded through an acoustic generator which directs a desired pattern of generated turbulent airflow over a missile inlet, diffuser, and combustor. In this manner, these missile component parts are subjected to noise vibrations similar to those found during actual missile flight. After the turbulent air has passed over the above-mentioned component parts of the test missile, it continues along an enclosing, acoustically insulated tunnel, and is exhausted to the atmosphere through noise insulating baffles. The acoustic generator can be adjusted, in a manner hereinafter set forth, to produce a wide range of resonant frequencies. Resonant frequencies and decibel level of the generated sound can be varied further by providing a number of vortex generators or airflow spoilers rearwardly of the acoustic generator.

It is an object of this invention therefore, to provide a missile flight simulator for producing a wide range of noise and vibration frequencies similar to those experienced by a missile under actual flight conditions.

Another object of this invention is to provide an apparatus which produces high pressure turbulent airflow through the component parts of a missile or a simulated airframe structure.

A further object of this invention is to provide a specific means for varying resonant noise and vibration frequencies experienced by a missile or other airframe structure while undergoing analytical tests in a missile flight simulator.

2

The above objects as well as other objects of this invention will be apparent from the following description of the accompanying drawings, which illustrate but a single embodiment of the instant invention. It is to be understood that this invention is not to be limited necessarily to the embodiment preferred to be illustrated below, but must be interpreted to incorporate various modifications which will be apparent from the description of the accompanying drawings in which:

FIG. 1 is a diagrammatic top plan view of a missile flight simulator; and

FIG. 2 is a detail view in side elevation and partly in section of an acoustic generator apparatus used in conjunction with a missile flight simulator.

Referring now to the drawings, the missile flight simulator is shown generally at **1**. High pressure test air is introduced into the missile flight simulator **1** through an inlet pipe **2** and a coupling **3**. FIG. 2 of the drawings shows, in detail, an acoustic generator **4** and its associated apparatus. In reference specifically to FIG. 2, the high pressure test air is expanded by the acoustic generator **4** which is supported by a steel frame **5** which, in turn is supported upon a concrete floor or the like. A platform **6**, upon the support frame **5**, carries an annular nozzle block **7**. Along its longitudinal axis the annular nozzle block **7** has a cylindrical opening or bore **8** extending rearwardly of the nozzle block **7**, and is enlarged to form a tapered nozzle chamber **9**. A circular nozzle plate **10** symmetrically fills a major portion of the tapered nozzle chamber **9**, and is held in spaced relationship to the inner cylindrical surface of the nozzle chamber **9** by a series of three centering bolts **11**. The high pressure test air, which has been introduced into the missile flight simulator, is directed radially by the nozzle plate **10** into a plenum formed between the outer surface of the tapered nozzle chamber **9** and the circular nozzle plate **10**. The radial clearance, between the tapered nozzle chamber **9** and the outer edge of the circular nozzle plate **10**, thus forms an annular nozzle throat **12** which generates an annular, high velocity airjet. An annular airjet configuration is advantageous in that it produces an airjet having a large circumferential boundary area and a large mixing volume. Since a large boundary area can be made turbulent within a relatively short distance, it is possible to create a more intense noise for a given mass flow to direct upon the missile components under test. An annular airjet thus makes possible complete sound pressure spectrums of a large jet with a relatively small nozzle throat area.

A wide range of random vibration frequencies can be produced by selectively varying the nozzle throat area of the acoustic generator **4**. The area of the nozzle throat **12** is selectively varied by proper longitudinal adjustment of the circular nozzle plate **10** within the tapered nozzle chamber **9**. Longitudinal adjustment of the nozzle plate **10** is accomplished by selectively positioning it along the axes of a series of studs **13**, which extend rearwardly from the face of the nozzle block **7** through the circular nozzle plate **10**. A series of jam nuts **14** threadably engage the studs **13** rearwardly of the nozzle plate **10**. A plurality of coil springs **15**, disposed about the studs **13**, continuously urge the nozzle plate **10** against the series of jam nuts **14**, to thereby maintain the nozzle plate **10** in its selected position along the axes of the studs **13**.

The range of resonant vibration frequencies can be further varied by adjustment of a plurality of twelve vortex generators **15'**, which face peripherally into the flow pattern of the airjet. Each of the vortex generators **15'** consists of a flat oblong plate having a curved free end portion, and is provided with a threaded stud **16**. Jam nuts **17** threadably mount each of the said studs **16** in a jet chamber **18**. The threaded mounting permits each of the vortex generators **15'** to be adjustable in angle of

attack with respect to the airjet. The vortex generators **15'** not only alter the resonant vibration frequencies, but also lower the decibel level of the generated noise. In addition, they control vibration transmission paths of the airjet over the missile components. The jet chamber **18**, mounted on a radially extending flange **19**, secured to the nozzle block **7**, confines the annular airjet as it leaves the nozzle throat **12**. The airjet then passes over the inlet, diffuser, and combustor of a missile A in the simulator, subjecting them to the generated vibrations. It then proceeds down an acoustically insulated tunnel **20** which is open to the atmosphere at its downstream end. The test air is exhausted to the atmosphere through acoustic baffles, shown diagrammatically at **21**.

The above disclosed embodiment of the instant invention permits duplication of a wide variation of flight test vibrations in both magnitude and frequency-wide variations are possible, not only from flight to flight, but within any one flight profile.

Obviously, many modifications and variations of the present invention are possible in the light of the above teachings. It is therefore to be understood that within the scope of the appended claims the invention may be practiced otherwise than as specifically described.

What is claimed is:

1. In a missile flight simulator for testing missile components:

a nozzle block having a tapered bore defining a nozzle chamber,

means for generating a turbulent airjet of selected vibration frequency within said chamber,

a jet chamber, and,

a plurality of vortex generators disposed peripherally about said jet chamber and projecting into the annular turbulent airjet, each of said vortex generators comprising a flat plate adjustable within the annular turbulent airjet as to angle of attack thereby to control the frequency and decibel level of the said annular turbulent airjet.

2. The invention recited in claim **1**, wherein said means comprises a nozzle plate, and including additionally means for mounting the nozzle plate in the chamber, said nozzle plate being movable in said chamber upon movement of said additional means for controlling the frequency of the turbulent airjet.

3. The invention as recited in claim **2**, wherein said additional means comprises a plurality of spaced studs, jam nuts adjustable on the studs, and springs urging the nozzle plate against the jam nuts.

4. A flight simulator for testing missile components, comprising,

an acoustic generator,

means connecting the acoustic generator to a source of air under pressure,

a jet chamber connected to the acoustic generator,

a plurality of vortex generators mounted in the jet chamber,

a tunnel having its upstream end connected to the jet chamber,

and acoustic baffles confronting the tunnel at its downstream end,

air under pressure passing through said means being diverted by said acoustic generator and said vortex generators for producing a high velocity jet to impinge upon surfaces of a missile in the tunnel.

5. A flight simulator as recited in claim **4**, wherein said acoustic generator includes a nozzle block having a nozzle chamber, a nozzle plate in the chamber, and means for adjusting the position of the plate in the chamber, whereby the frequency of vibration of the high velocity jet may be varied.

6. A flight simulator as recited in claim **5**, wherein said vortex generators each comprise a flat oblong plate extending radially within the jet chamber and being rotatable about its axis for varying its angle of attack with respect to the high velocity jet.

7. A flight simulator as recited in claim **5**, wherein said means comprises a plurality of studs extending through the nozzle block, nozzle chamber and nozzle plate, springs surrounding the studs between the plate and the block and urging the plate away from the block, and jam nuts on the studs and limiting movement of the plate in the nozzle chamber.

8. The invention as recited in claim **7**, including additionally means on the nozzle block and engaging the nozzle plate for centering said plate in the nozzle chamber.

References Cited

UNITED STATES PATENTS

2,448,966	9/1948	Fales	73—147
2,975,632	3/1961	Ganahl	73—147 X
2,987,033	6/1961	Coceano	116—137
3,226,029	12/1965	Goodman et al.	116—137 X

DAVID SCHONBERG, *Primary Examiner.*