(12) STANDARD PATENT (11) Application No. **AU 2011302610 B2**
(19) AUSTRALIAN PATENT OFFICE

(54) Title
Balanced phacoemulsification tip

(51) International Patent Classification(s)
G06G 7/60 (2006.01) ***A61F 9/007*** (2006.01)

(21) Application No: **2011302610** (22) Date of Filing: **2011.08.03**

(87) WIPO No: **WO12/036795**

(30) Priority Data

(31) Number	(32) Date	(33) Country
12/884,285	**2010.09.17**	**US**

(43) Publication Date: **2012.03.22**
(44) Accepted Journal Date: **2016.09.08**

(71) Applicant(s)
Alcon Research, Ltd.

(72) Inventor(s)
Ovchinnikov, Mikhail A.

(74) Agent / Attorney
Phillips Ormonde Fitzpatrick, L 16 333 Collins St, Melbourne, VIC, 3000

(56) Related Art
WO 2011/002576
US 2009/0131885
WO 1986/002257

(12) INTERNATIONAL APPLICATION PUBLISHED UNDER THE PATENT COOPERATION TREATY (PCT)

(19) World Intellectual Property Organization
International Bureau

(43) International Publication Date
22 March 2012 (22.03.2012)

WIPO | PCT

(10) International Publication Number
WO 2012/036795 A3

(51) International Patent Classification:
A61F 9/007 (2006.01)

(21) International Application Number:
PCT/US2011/046362

(22) International Filing Date:
3 August 2011 (03.08.2011)

(25) Filing Language: English

(26) Publication Language: English

(30) Priority Data:
12/884,285 17 September 2010 (17.09.2010) US

(71) Applicant *(for all designated States except US)*: **ALCON RESEARCH, LTD.** [US/US]; 6201 South Freeway, TB4-8, Fort Worth, Texas 76134 (US).

(72) Inventor; and

(75) Inventor/Applicant *(for US only)*: **OVCHINNIKOV, Mikhail A.** [US/US]; 24922 Monte Verde Dr., Laguna Niguel, California 92677 (US).

(74) Agents: **HENRICHS, Russell** et al.; Alcon Research, Ltd., 6201 South Freeway, TB4-8, Fort Worth, Texas 76134 (US).

(81) Designated States *(unless otherwise indicated, for every kind of national protection available)*: AE, AG, AL, AM, AO, AT, AU, AZ, BA, BB, BG, BH, BR, BW, BY, BZ, CA, CH, CL, CN, CO, CR, CU, CZ, DE, DK, DM, DO, DZ, EC, EE, EG, ES, FI, GB, GD, GE, GH, GM, GT, HN, HR, HU, ID, IL, IN, IS, JP, KE, KG, KM, KN, KP, KR, KZ, LA, LC, LK, LR, LS, LT, LU, LY, MA, MD, ME, MG, MK, MN, MW, MX, MY, MZ, NA, NG, NI, NO, NZ, OM, PE, PG, PH, PL, PT, QA, RO, RS, RU, SC, SD, SE, SG, SK, SL, SM, ST, SV, SY, TH, TJ, TM, TN, TR, TT, TZ, UA, UG, US, UZ, VC, VN, ZA, ZM, ZW.

(84) Designated States *(unless otherwise indicated, for every kind of regional protection available)*: ARIPO (BW, GH, GM, KE, LR, LS, MW, MZ, NA, SD, SL, SZ, TZ, UG, ZM, ZW), Eurasian (AM, AZ, BY, KG, KZ, MD, RU, TJ, TM), European (AL, AT, BE, BG, CH, CY, CZ, DE, DK, EE, ES, FI, FR, GB, GR, HR, HU, IE, IS, IT, LT, LU, LV, MC, MK, MT, NL, NO, PL, PT, RO, RS, SE, SI, SK, SM, TR), OAPI (BF, BJ, CF, CG, CI, CM, GA, GN, GQ, GW, ML, MR, NE, SN, TD, TG).

Published:

— *with international search report (Art. 21(3))*

(88) Date of publication of the international search report:
19 July 2012

(54) Title: BALANCED PHACOEMULSIFICATION TIP

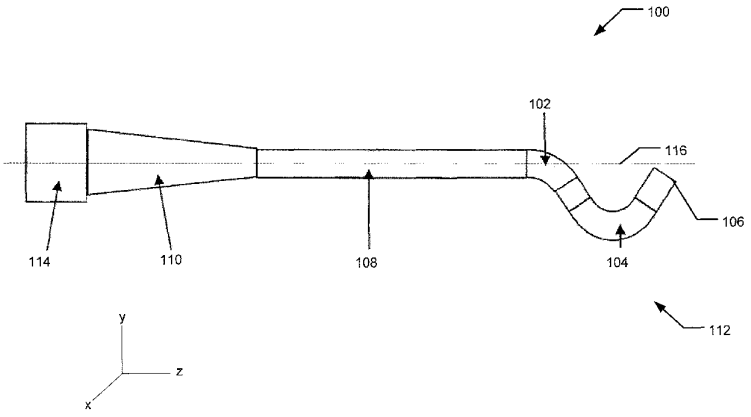

FIG. 1

(57) Abstract: In various embodiments, a phacoemulsification tip may include a shaft and a cutting edge portion having at least a first and second bend. The geometry of the tip may be configured to result in a lateral displacement (u_x), perpendicular to the shaft during torsional vibration of the tip at frequencies between 10 kHz and 60 kHz, of less than approximately 5% to 25% (e.g., 15%) of the lateral displacement at the distal end point of the tip throughout a portion of the shaft extending from the end of a conical portion of the tip through to the first bend in the cutting edge portion of the tip. Software and/or physical modeling may be used to determine the tip geometry.

WO 2012/036795 A3

20113026610 14 Mar 2013

BALANCED PHACOEMULSIFICATION TIP

FIELD OF THE INVENTION

The present invention generally pertains to phacoemulsification. More particularly, but not by way of limitation, the present invention pertains to phacoemulsification tips.

DESCRIPTION OF THE RELATED ART

The human eye in its simplest terms functions to provide vision by transmitting light through a clear outer portion called the cornea, and focusing the image by way of the lens onto the retina. The quality of the focused image depends on many factors including the size and shape of the eye, and the transparency of the cornea and lens.

When age or disease causes the lens to become less transparent, vision deteriorates because of the diminished light which can be transmitted to the retina. This deficiency in the lens of the eye is medically known as a cataract. An accepted treatment for this condition is surgical removal of the lens and replacement of the lens function by an intraocular lens (IOL).

Cataractous lenses may be removed by a surgical technique called phacoemulsification. During this procedure, a thin phacoemulsification tip may be inserted into the diseased lens and vibrated ultrasonically. The vibrating tip may liquefy or emulsify the lens so that the lens may be aspirated out of the eye. The diseased lens, once removed, may be replaced by an artificial lens.

2011302610 21 Jul 2016

SUMMARY OF THE INVENTION

One aspect of the invention provides a phacoemulsification tip, comprising a shaft having a proximal end and a distal end; a cutting edge portion at the distal end of the shaft, wherein the cutting edge portion comprises at least a first and second bend; wherein a geometry of the shaft and the at least first and second bend is configured to result in a lateral displacement, perpendicular to the shaft, during ultrasonic torsional vibration of the tip, of less than approximately 5 to 25% of the lateral displacement at a distal end point of the tip throughout a portion of the shaft that extends from the proximal end of the shaft to the first bend of the cutting edge portion; wherein the at least first and second bends are positioned such that ultrasonic torsional vibration energy in the shaft during ultrasonic torsional vibration is in a twisting vibrational mode along a substantial portion of the shaft.

In various embodiments, a phacoemulsification tip may include a shaft and a cutting edge portion having at least a first and second bend. The geometry of the shaft and the at least first and second bend may be configured to result in a lateral displacement, perpendicular to the shaft during ultrasonic torsional vibration of the tip, of the shaft along its length that is less than approximately 5% to 25% (e.g., 15%) (other thresholds may also be used) of the displacement of the distal end point of the tip. In some embodiments, the shaft may extend from the end of a conical portion (which may be, for example, approximately 12 mm from the distal end point of the tip) through to the first bend in the cutting edge portion (which may be, for example, approximately 5 mm from the distal end point of the tip). Other locations of the first bend are also contemplated (e.g., 3 mm, 8 mm, etc. from the distal end point of the tip). In some embodiments, a proximal end of the conical portion (i.e., the hub) may be configured to couple to an ultrasonic horn.

In some embodiments, a method of determining a tip geometry may include providing two or more tip geometries (e.g., in an electronic format such as a computer readable input file with one or more stored variables describing the geometry), modeling behavior of the tip geometries during ultrasonic torsional vibrations and comparing lateral displacement of the various tip geometries to select a tip with a smallest lateral displacement along a portion of the tip shaft configured to be along an incision in an eye during a phacoemulsification procedure (which may be, for example, from an end of the conical portion to the first bend).

2011302610 21 Jul 2016

In some embodiments, a method of determining a tip geometry may include providing two or more physical tips with different geometries (e.g., hand bent at two or more locations along the tip), ultrasonically torsionally vibrating the different tips, determining lateral displacement of the various tips, and comparing the determined lateral displacements to select a tip with a smallest lateral displacement along a portion of the tip shaft configured to be along an incision in an eye during a phacoemulsification procedure.

BRIEF DESCRIPTION OF THE DRAWINGS

For a more complete understanding of the present invention, reference is made to the following description taken in conjunction with the accompanying drawings in which:

FIG. 1 illustrates a balanced phacoemulsification tip with a distal end having two bends, according to an embodiment;

FIG. 2 illustrates a phacoemulsification surgical console connected to a handpiece through an irrigation line and an aspiration line, according to an embodiment;

FIG. 3 illustrates an ultrasonic horn attached to the balanced tip, according to an embodiment;

FIG. 4 illustrates motion of the balanced tip, according to an embodiment;

FIG. 5 illustrates a balanced tip inserted into an incision in the eye, according to an embodiment;

FIG. 6 illustrates twisting vibrations and lateral vibrations relative to the balanced tip, according to an embodiment;

FIG. 7a illustrates model equations for twist displacement along the z axis of the tip, according to an embodiment;

FIG. 7b illustrates model equations for lateral displacement along the z axis of the tip, according to an embodiment;

FIG. 7c illustrates a component (l(z)) of the modeling equations, according to an embodiment;

FIGs. 8a-b illustrate embodiments of input tip shapes and corresponding output lateral displacement and twist angle along the tip length according to the model equations;

FIG. 9 illustrates a flowchart of the method for determining a tip geometry, according to an embodiment;

FIG. 10 illustrates a flowchart of another method for determining a tip geometry, according to an embodiment; and

FIG. 11 illustrates six possible balanced tip embodiments.

It is to be understood that both the foregoing general description and the following detailed description are exemplary and explanatory only and are intended to provide a further explanation of the present invention as claimed.

DETAILED DESCRIPTION OF THE EMBODIMENTS

FIG. 1 illustrates a phacoemulsification balanced tip 100 with a proximal end 114 and a cutting edge portion 112 that is bent relative to a tip shaft 108. The balanced tip 100 may include a predominantly straight shaft 108 and at least two bends (first bend 102 and second bend 104) in the cutting edge portion 112. Other numbers of bends are also contemplated (e.g., 3 bends, 4 bends, 7 bends, etc). The balanced tip 100 may be used in conjunction with a phacoemulsification handpiece 204 (e.g., see FIG. 2). When used with the handpiece 204, the balanced tip 100 may be vibrated longitudinally and/or torsionally, i.e., by rotating the tip 100 back and forth around its axis. The bends 102/104 may be positioned, for example, along approximately the distal 5 to 25% of the length of the balanced tip 100) (which may be a portion positioned approximately 5 mm from the distal end point 106 of the tip (measured along the tip axis 116) through to approximately 12 mm from the distal end point 106 of the tip 100). Other portions of the length are also contemplated.

In some embodiments, balancing the tip 100 may include configuring a geometry of the tip 100 (e.g., the geometry of a conical portion 110 of the tip, the shaft 108, and/or the at least first bend 102 and second bend 104) such that, during ultrasonic torsional vibration of the tip 100, a lateral displacement of the shaft 108, perpendicular to the shaft 108, along its length may be less than approximately 5% to 25% (e.g., 15%) of the lateral displacement of the distal end point 106 of the tip 100 (e.g., as measured during frequencies the tip is vibrated at during an ophthalmic procedure). Other thresholds may also be used (e.g., 10 to 20%, 15 to 30%, 10 to 40%, etc). In some embodiments, lateral displacement of the tip (during expected operational frequencies) at the distal end point 106 may be approximately in a range of 30 to 200 microns. As an example, if the distal end point 106 has a lateral displacement of approximately +/- 0.035 mm during ultrasonic torsional vibration of the tip 100, the geometry of the tip may be configured such that the maximum lateral displacement along the shaft is less than 5 microns (other displacements are also

possible). As another example, if the distal end point 106 has a lateral displacement of approximately +/- 0.055 mm during ultrasonic torsional vibration of the tip 100, the geometry of the tip may be configured such that the maximum lateral displacement along the shaft is less than 8 microns. In some embodiments, the shaft may extend from the end of a conical portion 110 (which may be, for example, approximately 12 mm from the distal end point 106) through to the first bend 102 in the cutting edge portion 112 (which may be, for example, approximately 5 mm from the distal end point 106). Other locations of the first bend 102 are also contemplated (e.g., 3 mm, 8 mm, etc. from the distal end point 106).

FIG. 2 illustrates a phacoemulsification surgical console 214 connected to a handpiece 204 through an irrigation line 206 and an aspiration line 208. In some embodiments, power may be supplied to handpiece 204 through electrical cable 210 and flow through irrigation/aspiration lines 206 and 208 may be controlled by a user (e.g., via footswitch 212) to perform a phacoemulsification procedure. One example of a handpiece for a phacoemulsification procedure is described in U.S. Patent Application Publication entitled "Ultrasound Handpiece," Publication No. 2006/0041220, Serial No. 11/183,591, by Mikhail Boukhny, James Y. Chon, and Ahmad Salehi filed July 18, 2005, which is hereby incorporated by reference in its entirety as though fully and completely set forth herein.

In some embodiments, handpiece 204 may be coupled to a phacoemulsification balanced tip 100. In some embodiments, the handpiece 204 may include at least one set of piezoelectric elements 227 polarized to produce longitudinal motion when excited at a relevant resonant frequency. As seen in FIG. 3, the piezoelectric crystals 227 may be connected to an ultrasonic horn 216 to which a balanced tip 100 is attached. The horn 216 and/or the balanced tip 100 may include a plurality of diagonal slits or grooves 224. The slits or grooves 224 may produce torsional movement in the balanced tip 100 when the piezoelectric crystals are excited at a resonant frequency. Movement of the balanced tip 100 caused by the grooves

224 engaging fixed elements in the handpiece 204 may include a torsional rotational component relative to a centerline of the horn 216.

As seen in FIG. 4, in some embodiments, the balanced tip 100 may be configured for ultrasonic torsional rotation back and forth through approximately an arc in the range of approximatly 2 to 6 degrees (e.g., an arc of 4 degrees). Other arcs are also contemplated (e.g., 10 degree arc (e.g., plus or minus 5 degrees off center (see middle diagram 2), plus or minus 20 degrees off center, plus or minus 90 degrees off center, etc)). In some embodiments, the balanced tip 100 may be ultrasonically torsionally vibrated at a frequency of approximately between 10-60 kHz (e.g., 31 kHz). Other arcs and frequencies are also contemplated. For example, an arc of plus or minus 20 degrees and/or a frequency of 42 kHz may be used. The arc shown in FIG. 4 is exaggerated to show movement (i.e., the total arc shown is 180 degrees, whereas the balanced tip 100 may have an arc of 4 degrees). In some embodiments, the tip movement in FIG. 4 may also include a longitudinal component (e.g., up and down along an axis parallel to the shaft).

As seen in FIG. 5, when used to perform phacoemulsification, the ends of the balanced tip 100 and an irrigating sleeve 226 may be inserted into a small incision 511 in the cornea 501, sclera 507, or other location in the eye tissue to gain access to, for example, the anterior chamber 503 of the eye 509. In various embodiments, a portion or all of the balanced tip 100 may be inside the irrigating sleeve 226. A portion 513 of the tip 100 along the incision 511 may be in thermal contact with the incision 511 (and/or other parts of the eye) through the irrigating sleeve 226 during the phacoemulsification procedure. In some embodiments, the portion 513 along the incision 511 may be in direct contact with the incision 511 (e.g., in the absence of the sleeve 226). The balanced tip 100 may be ultrasonically torsionally vibrated along its longitudinal axis within the irrigating sleeve 226 by a crystal-driven ultrasonic horn 216, thereby emulsifying upon contact the selected tissue in situ. The hollow bore of the balanced tip 100 may communicate with the bore in the horn that in turn may

communicate with the aspiration line from the handpiece 204 to the console 214 (e.g., see FIG. 2). A reduced pressure or vacuum source in the console 214 may draw or aspirate the emulsified tissue from the eye 509 through an open end of the balanced tip 100, the bore of the balanced tip 100, the horn bore, and the aspiration line 208 and into a collection device. The aspiration of emulsified tissue may be aided by a saline flushing solution or irrigant that may be injected into the surgical site through the small annular gap between the inside surface of the irrigating sleeve 226 and an outside surface of the balanced tip 100.

As seen in FIG. 6, ultrasonic torsional vibrations of the balanced tip 100 may result in at least two motions: 1) lateral displacement, of the balanced tip 100 from its equilibrium position, perpendicular to an axis 116 that is collinear with a straight shaft portion (axis 116 may be denoted as the "z-axis") and perpendicular to an axis of a bend of the tip (denoted as y-axis in FIG. 1) (the y-axis and z-axis forming a plane that includes the bend); 2) twist angle along the z axis of the balanced tip 100. An unbalanced tip may have significant bending along the tip length (especially in the shaft) under the action of torsional vibration. By balancing the tip as described herein, lateral displacement along the shaft of the tip 100 may be reduced while the lateral displacement at the distal end point 106 of the tip 100 may be increased. Twisting vibrations may be present in the tip 100 (e.g., twisting back and forth along a twist angle relative to the z axis) which may lead to a relatively large lateral displacement of the distal end point 106 in addition to or in the absence of the lateral displacement of the shaft 108.

In some embodiments, balancing the tip 100 may include adjusting the tip geometry and physically testing a tip with the adjusted tip geometry or using modeling equations or Finite Element Analysis (FEA) to model tip vibrations to find a tip geometry that results in reduced lateral displacement along the shaft 108 with increased lateral displacement and twisting at the distal end point 106 (e.g., using software such as ANSYS). Tip geometry characteristics may include, for example,

number of bends (e.g., bends 102, 104), location of the bends, length of the shaft, diameter of the shaft 108, length of the conical portion 110, and diameter of the conical portion. Other tip geometry characteristics may also be modified. In some embodiments, different tip geometries may be tested, for example, by physically creating tips with various tip geometries, vibrating the tips (e.g., using frequencies and modes that are used during phacoemulsification) and monitoring lateral displacement and/or heat generated by the various tip geometries. One or more iterations of testing different tip geometries (e.g., by fixing the location of one bend in the tip and testing different tips with different second bend locations and curvature) may result in identifying one or more optimized tip geometries. Other numbers of bends and geometric modifications (e.g., modifying the location of both bends while holding curvature of both bends constant, modifying the location and curvature of the bends, modifying the number of bends, modifying the length of the shaft, modifying the length of the conical portion, modifying the radius of the shaft, modifying the radii of the conical portion, etc.) are also possible.

In some embodiments, modeling equations may be used (in place of or in addition to FEA and/or physical testing) to test different tip geometries. For example, the equations describing how the twist angle (ϕ) and the lateral displacement (u_x) vary along the z axis while ultrasonically torsionally vibrating a straight (predominantly cylindrical) tip (e.g., based on the general elasticity theory) may be represented as follows (see also FIGs. 7a-b):

$$\ddot{\phi} = \frac{1}{\rho I(z)} \frac{\partial}{\partial z}\left(C(z) \frac{\partial \phi}{\partial z} \right) \text{where } \ddot{\phi} = \frac{\partial^2 \phi}{\partial t^2};\ I(z) = \frac{\pi}{2}\left(R_2^4(z) - R_1^4(z)\right);\ C(z) = I(z) * \mu$$

$$\ddot{u}_x = \frac{1}{\rho S(z)} \frac{d^2}{dz^2}\left(E I_y(z) \frac{d^2 u_x}{dz^2} \right) \text{where } \ddot{u}_x = \frac{\partial^2 u_x}{\partial t^2};\ I_y(z) = \frac{\pi}{4}\left(R_2^4(z) - R_1^4(z)\right);\ \text{and}$$

$$S(z) = \pi\left(R_2^2(z) - R_1^2(z)\right)$$

Where ϕ is the twist angle of the tip, ρ is density of the tip material, $I(z)$ is the moment of inertia of the cylindrical tip cross-section around the z axis, $R_1(z)$ is the inner radius of a hollow inner section of the cylindrical tip body (if the cylindrical body is solid, $R_1(z)$ may be 0 along the entire z axis); $R_2(z)$ is the outer radius of a cylindrical tip body; t is time, u_x is lateral displacement along the x-axis, $S(z)$ is the cross-sectional area of the cylindrical tip along the z axis, E is young's modulus of the tip material, $I_y(z)$ is the moment of inertia of the cross-section of a cylindrical tip around the y axis, and μ is the torsional modulus of the tip material. Characteristics such as ρ may be the same for the entire tip while characteristics such as $R_1(z)$ and $R_2(z)$ may vary along the z-axis (and thus may be represented, for example, as an array of values). The equations describing how the twist angle (ϕ) and the lateral displacement (u_x) vary along the z axis while ultrasonically torsionally vibrating a curved (predominantly cylindrical) tip (e.g., a tip with bends 102/103) may be represented as follows (see also FIGs. 7a-b):

$$\ddot{\phi} = \frac{1}{\rho I(z)} \frac{\partial}{\partial z}\left(C(z)\frac{\partial \phi}{\partial z}\right) - \frac{d^2 l(z)}{dz^2}\left(E I_y(z)\left(\frac{d^2 u_x}{dz^2} - \phi \frac{d^2 l(z)}{dz^2}\right)\right) \quad \text{where} \quad \ddot{\phi} = \frac{\partial^2 \phi}{\partial t^2};$$

$$I(z) = \frac{\pi}{2}\left(R_2^4(z) - R_1^4(z)\right);\ C(z) = I(z) * \mu$$

$$\ddot{u}_x = \frac{1}{\rho S(z)} \frac{d^2}{dz^2}\left(E I_y(z)\left(\frac{d^2 u_x}{dz^2} - \phi \frac{d^2 l(z)}{dz^2}\right)\right) \quad \text{where} \quad \ddot{u}_x = \frac{\partial^2 u_x}{\partial t^2};$$

$$I_y(z) = \frac{\pi}{4}\left(R_2^4(z) - R_1^4(z)\right); \text{ and } S(z) = \pi\left(R_2^2(z) - R_1^2(z)\right)$$

Where ϕ is the twist angle of the tip, ρ is density of the tip material, $I(z)$ is the moment of inertia of the cylindrical tip cross-section around the z axis, $R_1(z)$ is the inner radius of a hollow inner section of the cylindrical tip body (if the cylindrical body is solid, $R_1(z)$ may be 0); $R_2(z)$ is the outer radius of a cylindrical body; t is time,

u_x is lateral displacement along the x-axis, $S(z)$ is the cross-sectional area of the cylindrical tip along the z axis, E is young's modulus of the tip material, $I_y(z)$ is the moment of inertia of the cross-section of a cylindrical tip around the y axis, μ is the torsional modulus of the tip material, and $l(z)$ is lateral displacement along the y axis as seen in FIG. 7c. In some embodiments, one or more of the inputs and/or equations may be modified to account for the presence of a medium the tip is vibrating in (e.g., water, vitreous, etc). For example, the equation for lateral displacement of the tip may be modified as follows:

$$\ddot{u}_x - \gamma \dot{u}_x = \frac{1}{\rho S(z) + \rho_{Media} S_{Media}(z)} \frac{d^2}{dz^2}\left(E I_y(z)\left(\frac{d^2 u_x}{dz^2} - \phi \frac{d^2 l(z)}{dz^2} \right) \right)$$

Where γ is an empirical parameter that represents dissipation due to media (such as water). The value of γ may be adjusted to align the equation with measured displacements of existing tips in the media. The $\rho_{Media} S_{Media}(z)$ term in the denominator represents the increase of the tip mass due to the media that is following the motion of the tip. The ρ_{Media} term is the density of media and the $S_{Media}(z)$ is the cross section of the media moving together with the tip, which may be evaluated using ideal fluid theory as: $S_{Media}(z) = \pi\left(R_1^2(z) + R_2^2(z)\right)$ (where R_1 is the inner diameter of the media mass and R_2 is the outer diameter of the media mass following the tip). Other modifications are also contemplated.

In some embodiments, along with the various tip characteristics (e.g., ρ, E, etc.), geometric characteristics (e.g., $S(z)$, $I(z)$, $C(z)$, $I_y(z)$, etc.) may be entered by a user or computed by modeling software (e.g., Matlab™) based on other inputs provided by the user (e.g., the user may provide an inner radius (if the tip is hollow in the center), an outer radius of the tip along the z axis, a location (e.g., starting and stopping points (along the z axis) and curvature of one or more bends, etc). The user may also draw the tip shape using a graphical user interface (e.g., see input plots in FIGs. 8a-b), the user may preload a tip geometry (e.g., a three dimensional rendering),

etc. In some embodiments, the outer radius may be large at values of small z (i.e., in the conical portion of the tip) and relatively small at the end of the tip. Other inputs are also contemplated.

In some embodiments, the solutions for ϕ and u_x from the equations above may be used to examine the lateral displacement and twist angles along the z axis for different tip geometries and a balanced/tuned tip geometry may be selected from several tip geometries that maximizes the lateral displacement u_x and twist angle ϕ of the distal end point 106 while minimizing the lateral displacement u_x along the tip length (e.g., along the shaft 108). In some embodiments, solving for ϕ and u_x may include using harmonic analysis. A solution of the equations for ϕ and u_x may provide the twist angle and/or lateral displacements as functions of both z and t (e.g., u(z,t) and ϕ(z,t)). These solutions may then be used to model the tip according to a harmonic force. Modeling according to a harmonic force may include modeling the tip as if the tip oscillates at some frequency ω like $\cos(\omega t)$. Harmonics may thus be used to simplify the modeling equations for $u(z,t)$ and ϕ(z,t) according to the equations for $\ddot{\phi}$ and $\ddot{u}_x$ provided above. In some embodiments, the solution may be modeled according to $u(z)\cos(\omega t)$ (i.e. the vibrational amplitude may be modeled to depend only on z). The formula $u(z)\cos(\omega t)$ may be used in the equations of motion ($\ddot{\phi}$ and $\ddot{u}_x$) to provide a differential equation for the amplitude of vibrations $u(z)$ that is independent of time. The solutions for tip displacement amplitude and twist amplitude may then be plotted (e.g., see outputs in FIGs. 8a-b). In some embodiments, harmonic analysis may not be used (e.g., various solutions dependent on time and z may be determined and analyzed).

FIGs. 8a-b illustrate input tip shapes and the corresponding displacement and twist angles along the tip length according to the model equations provided above. In some embodiments, the position and the curvature of the first bend 102 may be

selected based on various factors such as ergonomics and manufacturing considerations. The second bend 104 may be positioned closer to the distal end point 106 of the balanced tip 100. The curvature of this bend may then be chosen using the prediction of the model equations provided above. The resulting tip shape may then be verified and/or adjusted by performing finite element analysis simulations. The ideal curvature may be such that the twisting vibrational mode and the bending vibrational mode of the balanced tip 100 are uncoupled. The motion of the balanced tip 100 under the torsional force may be the same as its twisting vibrational mode. In some embodiments, the tip bends (e.g., 102/104) may be positioned such that the ultrasonic torsional vibration energy in the balanced tip 100 may be in a twisting vibrational mode along a substantial portion of the shaft 108 (with reduced lateral motion). In some embodiments, the length of the shaft 108 may also be adjusted to tune the twisting vibrational mode such that that twisting vibration is in resonance with the ultrasonic driving mechanism (e.g., the piezoelectric elements 227 in the handpiece combined with a horn) to increase twisting displacement at the distal end point 106.

In some embodiments, the amplitude of the distal end point lateral displacement of the balanced tip 100 may depend on the resonance between the torsional driving force and the twisting vibrational mode. While the driving frequency may be set by the torsional horn design, the frequency of the twisting mode may be adjusted by selecting, for example, a length of the conical part 110 of the balanced tip 100. The length of the conical part 110 may be chosen to maximize the twisting vibrations of the balanced tip 100 thus resulting in the maximum twisting displacement of the distal end point 106. Other tip characteristics may also be varied.

In some embodiments, the balanced tip 100 may have a diameter in a range of approximately 0.5 mm to 2 mm (e.g., 1.5 mm). In some embodiments, the balanced tip 100 may have a diameter at a top of the tip of approximately 1.5 mm and a diameter near a distal end of the tip of 0.9 mm (other diameters and configurations are

also contemplated). In one embodiment, the balanced tip 100 may have a length of approximately 1 and 3/8 inches and the bends 102,104 may be located along the distal approximate 1/8 and 2/8 inches. Other dimensions are also contemplated. In some embodiments the first bend 102 may be approximately in a range of -10 to -30 degrees while the second bend 104 may be approximately in a range of 20 to 50 degrees. Other bend angles are also contemplated. The cutting edge portion 112 may have a flared, tapered and/or beveled end (in some embodiments, the cutting edge portion 112 may be flat). Balanced tip 100 may be made from stainless steel or titanium (other materials may also be used). Balanced tip 100 may have an overall length of between 0.50 inches and 1.50 inches (e.g., 1.20 inches). Other lengths are also contemplated. Balanced tip 100 may be formed using conventional metalworking technology and may be electropolished. Shaft 108 may be generally tubular, with an outside diameter of between 0.005 inches and 0.100 inches and an inside diameter of between 0.001 inches and 0.090 inches (other diameters are also contemplated).

FIG. 9 illustrates a flowchart of the method for determining a tip geometry, according to an embodiment. The elements provided in the flowchart are illustrative only. Various provided elements may be omitted, additional elements may be added, and/or various elements may be performed in a different order than provided below.

At 901, a tip geometry may be input into the system. For example, geometry inputs may be stored in an input file. In some embodiments, the tip geometry may include one or more of the following defined as values of the geometry at slices of the tip (e.g., the tip may be divided into 500 slices and the geometric characteristics of the tip at each slice may be stored in a separate array assigned to a respective geometric variable). For example, geometric characteristics for the tip slices may include curvature (e.g., in degrees), torsional rigidity (e.g., C(z)), moment of inertia around the x-axis (e.g., I(z)), cross sectional area (e.g., S(z)), moment of inertia of the slice

around the y-axis that controls the bending rigidity of the tip (e.g., $I_y(z)$), distance of the tip from the z-axis (e.g., l(z)). Other inputs are also contemplated.

In some embodiments, these slice based arrays may be input directly by a user or may be calculated based on other geometric inputs. For example, the user may provide a length of the tip, the length of the conical portion, the location along the tip where the first bend starts, the location along the tip where the first bend ends, the curvature of the first bend, the location along the tip where the second bend starts, the location along the tip where the second bend ends, the curvature of the second bend, the shear modulus of the tip material, young's modulus for the tip material, the density of the tip material, etc. and the specific inputs for the different slices may be calculated and stored in an input file or provided to modeling software. In some embodiments, the computer system may generate the inputs automatically. For example, the computer system may cycle through various iterations of possible tip geometries. In some embodiments, the user may draw a tip (e.g., through a graphical user interface) and the computer system may calculate the geometry based on the drawing. Other input types are also contemplated.

At 903, the system may use modeling equations and harmonic analysis to determine a lateral displacement and twist angle along the length of the tip for the given tip geometry and ultrasonic torsional vibration frequency (e.g., approximately 31 kHz). Other frequencies are also contemplated. For example, the equations $\ddot{u}_x = \frac{1}{\rho S(z)} \frac{d^2}{dz^2}\left(E I_y(z)\left(\frac{d^2 u_x}{dz^2} - \phi \frac{d^2 l(z)}{dz^2} \right)\right)$ and $\ddot{\phi} = \frac{1}{\rho I(z)} \frac{\partial}{\partial z}\left(C(z) \frac{\partial \phi}{\partial z}\right) - \frac{d^2 l(z)}{dz^2}\left(E I_y(z)\left(\frac{d^2 u_x}{dz^2} - \phi \frac{d^2 l(z)}{dz^2} \right)\right)$ may be solved for u_x and ϕ using inputs (as defined above) and harmonic analysis (e.g., using harmonics with $u(z)\cos(\omega t)$, $\phi(z)\cos(\omega t)$) to simplify the results by removing time. According to harmonic analysis, in some embodiments, it may be assumed that:

$u_x(z,t) = u(z)\cos(\omega t)$, and $\phi(z,t) = \varphi(z)\cos(\omega t)$

By taking a time derivative:

$\cos(\omega t)'' = -\omega^2 \cos(\omega t)$

and substituting it into the original equations and cancelling the time cosine one may obtain time independent equations:

$$-\omega^2 u(z) = \frac{1}{\rho S(z)} \frac{d^2}{dz^2}\left(E I_y(z)\left(\frac{d^2 u(z)}{dz^2} - \varphi(z)\frac{d^2 l(z)}{dz^2} \right)\right) \text{and}$$

$$-\omega^2 \varphi(z) = \frac{1}{\rho I(z)} \frac{\partial}{\partial z}\left(C(z)\frac{\partial \varphi(z)}{\partial z}\right) - \frac{d^2 l(z)}{dz^2}\left(E I_y(z)\left(\frac{d^2 u(z)}{dz^2} - \varphi(z)\frac{d^2 l(z)}{dz^2} \right)\right)$$

The above equations may then solved for the amplitudes of displacement *u(z)* and the twist angle $\varphi(z)$. Other equations for solving u_x may also be used.

At 905, the system may plot one or more of the lateral displacement and/or twist angle for the tip geometry (e.g., see FIG. 8a-8b).

At 907, the user (or system) may provide a second tip geometry (or modify the first tip geometry) and recalculate the lateral displacement (u_x) and twist angle (ϕ) along the length of the tip. Other modeling techniques may also be used. For example, finite element analysis (FEA) may be used to determine lateral displacement (u_x) and/or twist angle (ϕ) along the length of tips of various geometries subjected to various vibrations. Further, other equations may also be used (e.g., different equations may be used for square tip modeling).

At 909, characteristics for several tips with different geometries may be calculated according to 901-907 and compared for selection of one of the tip geometries (or generation of a new tip geometry to analyze). Selecting one of the tip geometries may include selecting a tip geometry based on which tip geometry has a smaller lateral displacement along a portion of the tip shaft configured to be along an incision in an eye during a phacoemulsification procedure. In some embodiments, if

the lateral displacement (of the analyzed tip geometries) along a portion of the tip shaft configured to be along an incision in an eye during a phacoemulsification procedure (e.g., throughout a portion of the shaft that extends from the proximal end of the shaft (such as the end of the conical portion) to the first bend of the cutting edge portion) is greater than approximately 5% to 25% (e.g., 15%) of the lateral displacement of the distal end point 106, (other thresholds (e.g., 1 micron, 2 microns, 100 microns, 2 mm, etc.) may also be used), another tip geometry may be generated, the lateral displacement of the new tip geometry may be modeled and compared to at least one of the lateral displacement of the first or second tip geometry for further selection between the first, second, and new geometry (at which point, one of the tips may be selected or another tip geometry may be generated for comparison purposes).

In some embodiments, generating new geometries may include modifying the previously tested geometries for additional modeling. In some embodiments, the user may further modify a selected tip geometry to tune the geometry according to additional criteria. For example, the user may modify the length of the conical part 110 (or other geometric characteristics such as length of the shaft) to increase the twisting vibrations of the balanced tip 100 to provide a greater lateral displacement of the distal end point 106. In some embodiments, the user may try different locations and curvatures of one or more of the bends to reduce the lateral displacement toward the proximal end of the tip while increasing the lateral displacement toward the distal end of the tip. The modifications may be used for a third, fourth, etc. tip and the results compared to previous tip results to optimize the selection of the geometric characteristics of the tip.

FIG. 10 illustrates a flowchart of another method for determining a tip geometry, according to an embodiment. The elements provided in the flowchart are illustrative only. Various provided elements may be omitted, additional elements may be added, and/or various elements may be performed in a different order than provided below.

2011302610 21 Jul 2016

At 1001, a first tip having a first geometry may be physically constructed or modeled (e.g., using Finite Element Analysis). In some embodiments, the first tip may have a circular cross section, square cross section, or a cross section that varies along an axis of the tip.

At 1003, the first tip may be vibrated under similar conditions as a phacoemulsification procedure (e.g., by being secured in a phacoemulsification handpiece as shown in FIGs. 2-3 and vibrated at a frequency of approximately 31 kHz and/or being "vibrated" using modeling software such as ANSYS). Other frequencies are also contemplated (e.g., approximately between 10 kHz and 60 kHz). In some embodiments, the first tip may be secured to a phacoemulsification handpiece to be vibrated. In some embodiments, the tip may be secured to a different apparatus (e.g., a test fixture) for applying the vibrations. In some embodiments, the end of the first tip may be placed in water or a material with similar characteristics as vitreous (other liquids are also contemplated). In some embodiments, the first tip may include two bends (e.g., 102, 104). Other numbers of bends are also contemplated.

At 1005, the first tip may be analyzed during the vibrations. For example, thermal imaging, stroboscopy, physical measurement of displacement, etc. may be used to determine lateral displacement (u_x) and/or twist angle (ϕ) (or characteristics indicative of lateral displacement (u_x) and/or twist angle (ϕ)) for the tip. For example, in a thermal scan of the vibrating tip, locations of higher heat along the tip length may be indicative of larger lateral displacements (u_x).

At 1007, a second tip may be constructed (e.g., the geometry of the first tip may be modified). Modifications may be made to different geometric characteristics as provided above. For example, the location and/or curvature of the second bend 103 may be modified.

At 1009, the second tip may be vibrated under similar conditions as the first tip.

At 1011, the second tip may be analyzed during the vibrations to determine similar characteristics (such as lateral displacement and twist angle) as determined for the first tip.

At 1013, characteristics for the first tip and the second tip may be compared and one of the first and second tip geometries may be selected or a new tip geometry may be generated and tested for comparison purposes. For example, selecting the first tip geometry or the second tip geometry may be based on which tip geometry has a smaller lateral displacement along a portion of the tip shaft configured to be along an incision in an eye during a phacoemulsification procedure. In some embodiments, if the lateral displacement along a portion of the tip shaft configured to be along an incision in an eye during a phacoemulsification procedure (e.g., throughout a portion of the shaft that extends from the proximal end of the shaft (such as the end of the conical portion) to the first bend of the cutting edge portion) is greater than approximately 5% to 25% (e.g., 15%) (as noted above, other thresholds are also possible) of the displacement of the distal end point 106 of the tip, a third tip may be generated and tested. The lateral displacement and/or twist angle of the third tip geometry may be determined and compared to the lateral displacement and/or twist angle of the first or second tip geometry for further selection between the first, second, and third tip geometries (at which point, one of the tips may be selected or another tip geometry may be generated for comparison purposes).

FIG. 11 illustrates six possible balanced tip embodiments (other embodiments are also possible). The balanced tip 100 may have a geometry according to one of the sets of parameters provided in the FIG. 11 table. The balanced tip 100 may have an outside diameter of *OD* inches; a diameter of the inside bore of *ID* inches; a total length of *L* inches from the hub (the proximal point of the tip 100 that is configured to

attach to the ultrasonic horn) to the distal end point 106 of the tip 100. The conical portion 110 of the tip 100 may extend L_c inches from the hub. The first bend 102 of the tip 100 may have an angle of α_1 degrees and extend between points lying at a distance of x_1 and x_2 inches from the distal end point 106. The second bend 104 may have the angle of α_2 degrees and extend between points lying at a distance of y_1 and y_2 inches from the distal end point 106. The cutting edge portion 112 may have a beveled edge (i.e., at the distal most edge of the cutting edge portion) that is facing up 30 or 45 degrees or facing down 30 degrees as indicated in the table (as an example, the bevel shown in FIG. 1 is facing down).

In some embodiments, a modeling system may include one or more processors. The processor may include single processing devices or a plurality of processing devices. Such a processing device may be a microprocessor, controller (which may be a micro-controller), digital signal processor, microcomputer, central processing unit, field programmable gate array, programmable logic device, state machine, logic circuitry, control circuitry, analog circuitry, digital circuitry, and/or any device that manipulates signals (analog and/or digital) based on operational instructions. The memory coupled to and/or embedded in the processors may be a single memory device or a plurality of memory devices. Such a memory device may be a read-only memory, random access memory, volatile memory, non-volatile memory, static memory, dynamic memory, flash memory, cache memory, and/or any device that stores digital information. Note that when the processors implement one or more of its functions via a state machine, analog circuitry, digital circuitry, and/or logic circuitry, the memory storing the corresponding operational instructions may be embedded within, or external to, the circuitry comprising the state machine, analog circuitry, digital circuitry, and/or logic circuitry. The memory may store, and the processor may execute, operational instructions corresponding to at least some of the elements illustrated and described in association with the figures (e.g., FIG. 9 and 10).

Where the terms "comprise", "comprises", "comprised" or "comprising" are used in this specification (including the claims) they are to be interpreted as specifying the presence of the stated features, integers, steps or components, but not precluding the presence of one or more other features, integers, steps or components, or group thereof.

Various modifications may be made to the presented embodiments by a person of ordinary skill in the art. Other embodiments of the present invention will also be apparent to those skilled in the art from consideration of the present specification and practice of the present invention disclosed herein. It is intended that the present specification and examples be considered as exemplary only with a true scope and spirit of the invention being indicated by the following claims and equivalents thereof.

2011302610 21 Jul 2016

WHAT IS CLAIMED IS:

1. A phacoemulsification tip, comprising:

a shaft having a proximal end and a distal end;

a cutting edge portion at the distal end of the shaft, wherein the cutting edge portion comprises at least a first and second bend;

wherein a geometry of the shaft and the at least first and second bend is configured to result in a lateral displacement, perpendicular to the shaft, during ultrasonic torsional vibration of the tip, of less than approximately 5 to 25% of the lateral displacement at a distal end point of the tip throughout a portion of the shaft that extends from the proximal end of the shaft to the first bend of the cutting edge portion;

wherein the at least first and second bends are positioned such that ultrasonic torsional vibration energy in the shaft during ultrasonic torsional vibration is in a twisting vibrational mode along a substantial portion of the shaft.

2. The phacoemulsification tip of claim 1, wherein the lateral displacement (u_x) is at least partially defined using the equation

$$\ddot{u}_x = \frac{1}{\rho S(z)} \frac{d^2}{dz^2}\left(E I_y(z)\left(\frac{d^2 u_x}{dz^2} - \phi \frac{d^2 l(z)}{dz^2} \right)\right)$$, wherein:

ϕ is the twist angle of the tip,

ρ is density of the tip material,

$S(z)$ is a cross-sectional area of the tip along the axis collinear with the shaft,

E is young's modulus of a tip material,

$I_y(z)$ is a moment of inertia of a cross-section of the tip around an axis perpendicular to the axis collinear with the shaft, and

$l(z)$ is lateral displacement along the axis perpendicular to the axis collinear with the shaft.

3. The phacoemulsification tip of claim 2, wherein # is provided through the equation

$$\ddot{\phi} = \frac{1}{\rho I(z)} \frac{\partial}{\partial z}\left(C(z) \frac{\partial \phi}{\partial z} \right) - \frac{d^2 l(z)}{dz^2}\left(E I_y(z)\left(\frac{d^2 u_y}{dz^2} - \phi \frac{d^2 l(z)}{dz^2} \right)\right)$$ where

2011302610 21 Jul 2016

$I(z)$ is a moment of inertia of a cylindrical tip cross-section around an axis collinear with the shaft, $C(z) - I(z) * \mu$ and μ is the torsional modulus of the tip material.

4. The phacoemulsification tip of claim 3, wherein the equations

$$\ddot{u}_x = \frac{1}{\rho S(z)} \frac{d^2}{dz^2}\left(E I_y(z)\left(\frac{d^2 u_x}{dz^2} - \phi \frac{d^2 l(z)}{dz^2} \right) \right)$$

and

$$\ddot{\phi} = \frac{1}{\rho I(z)} \frac{\partial}{\partial z}\left(C(z) \frac{\partial \phi}{\partial z} \right) - \frac{d^2 l(z)}{dz^2}\left(E I_y(z)\left(\frac{d^2 u_x}{dz^2} - \phi \frac{d^2 l(z)}{dz^2} \right) \right)$$

are solved though harmonic analysis.

5. The phacoemulsification tip of claim 4, wherein the proximal end of the tip includes a conical portion and wherein a length of the conical portion is selected to increase twisting vibrations of the tip during ultrasonic torsional vibrations to provide a greater lateral displacement at the distal end point of the tip.

6. The phacoemulsification tip of claim 1, wherein the lateral displacement of the tip at the distal end point of the tip is approximately in a range of 40 to 200 microns.

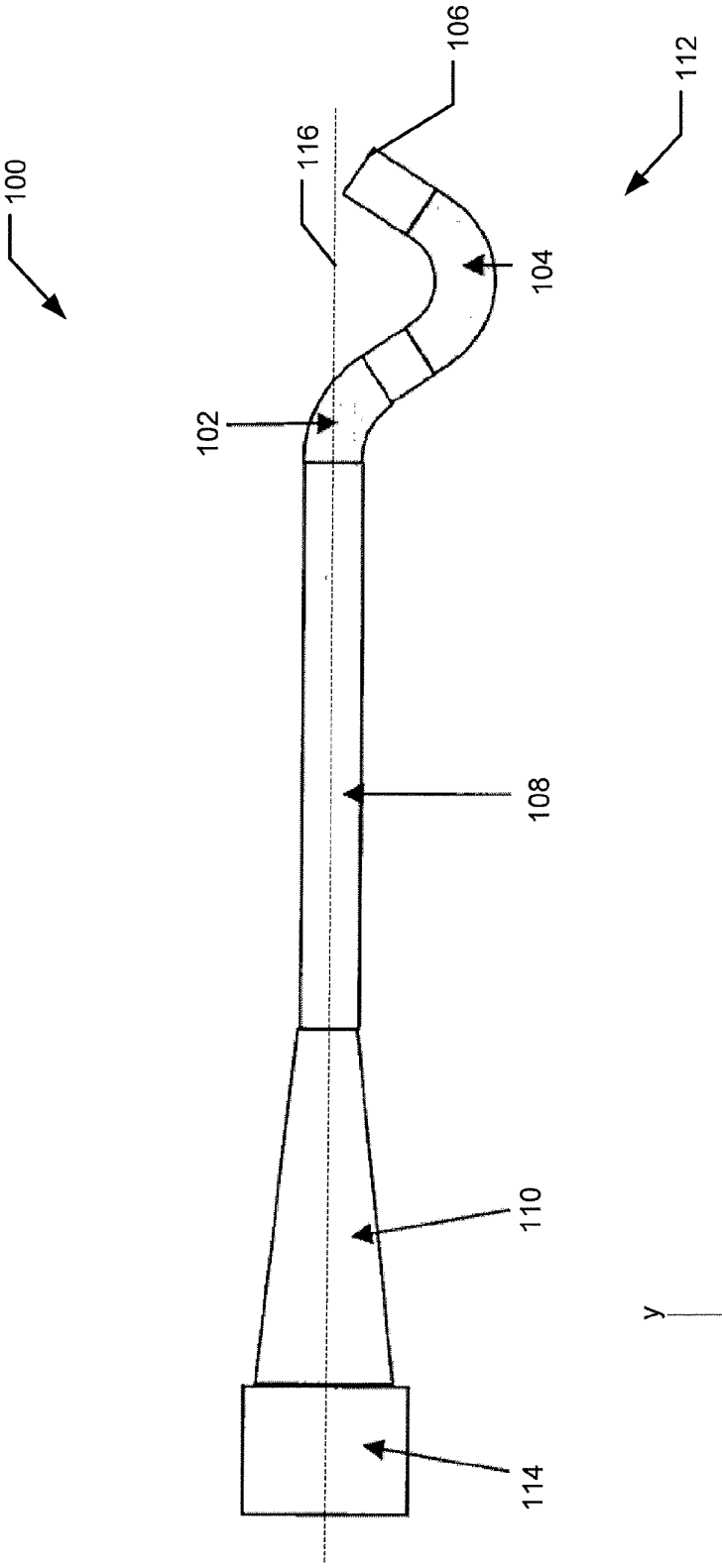

FIG. 1

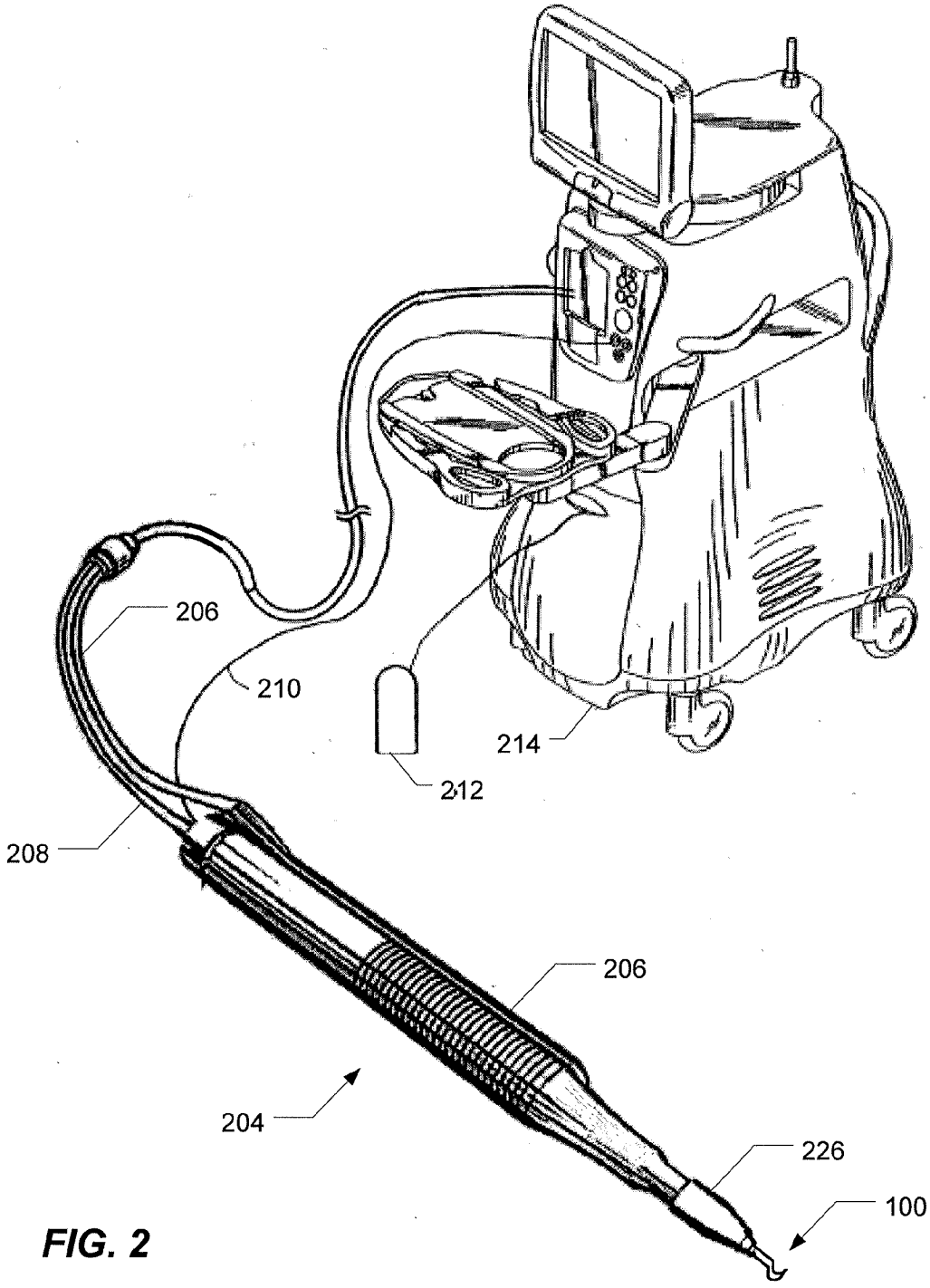

FIG. 2

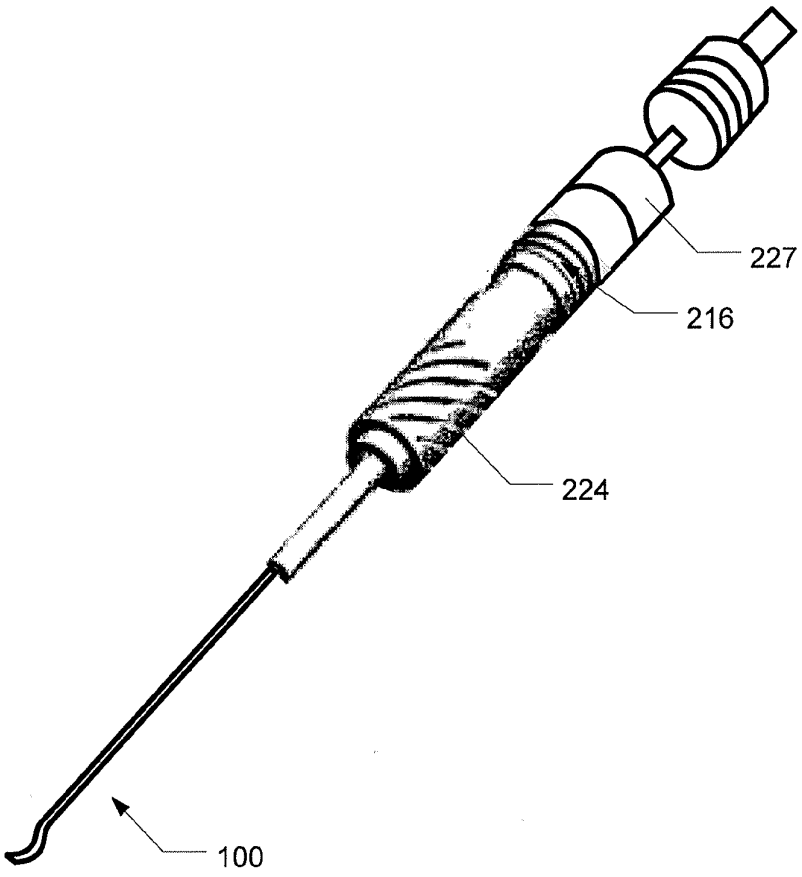

FIG. 3

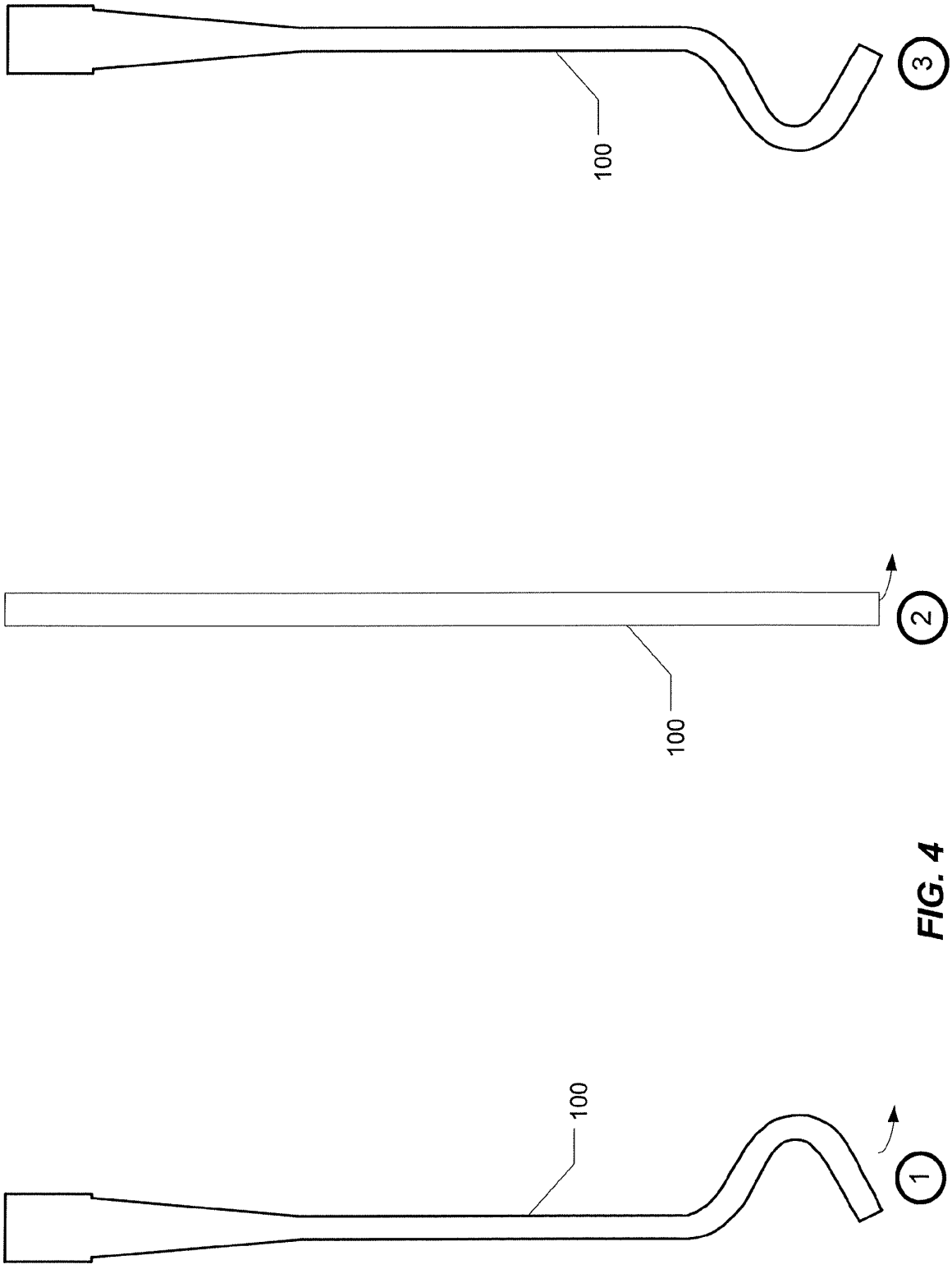

FIG. 4

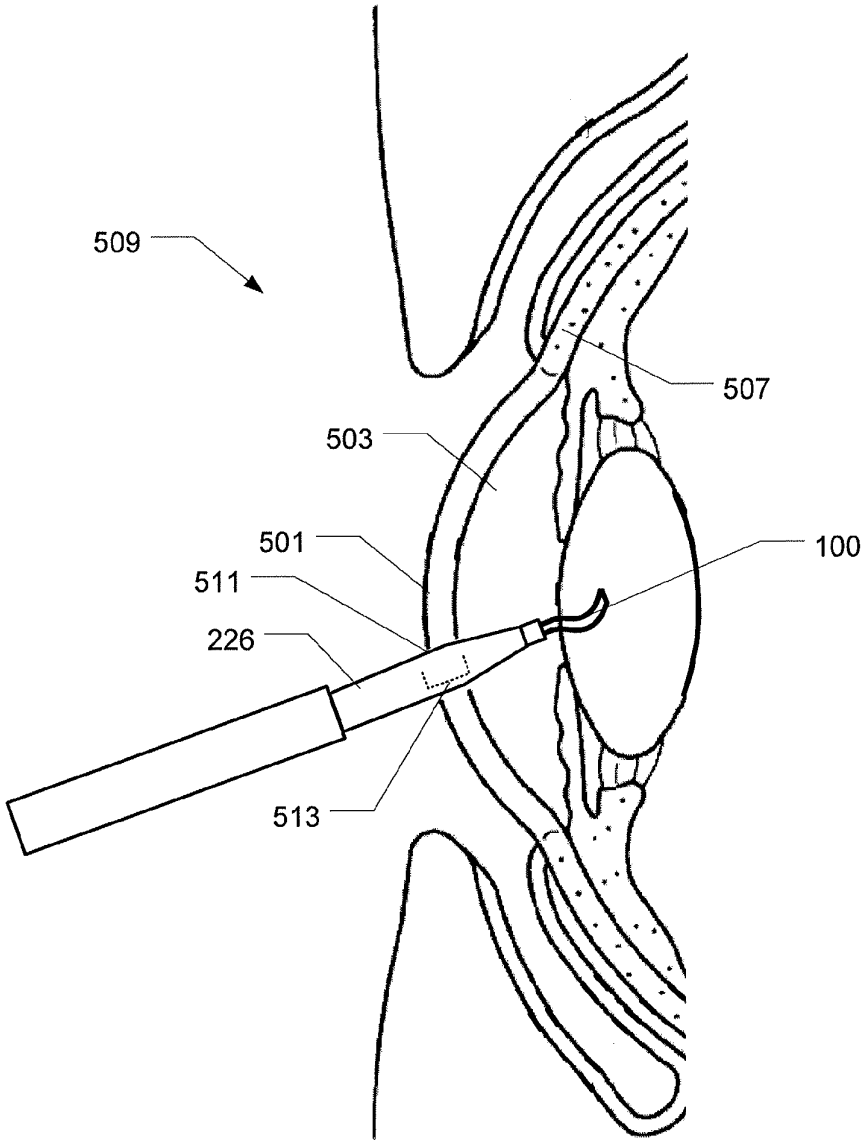

FIG. 5

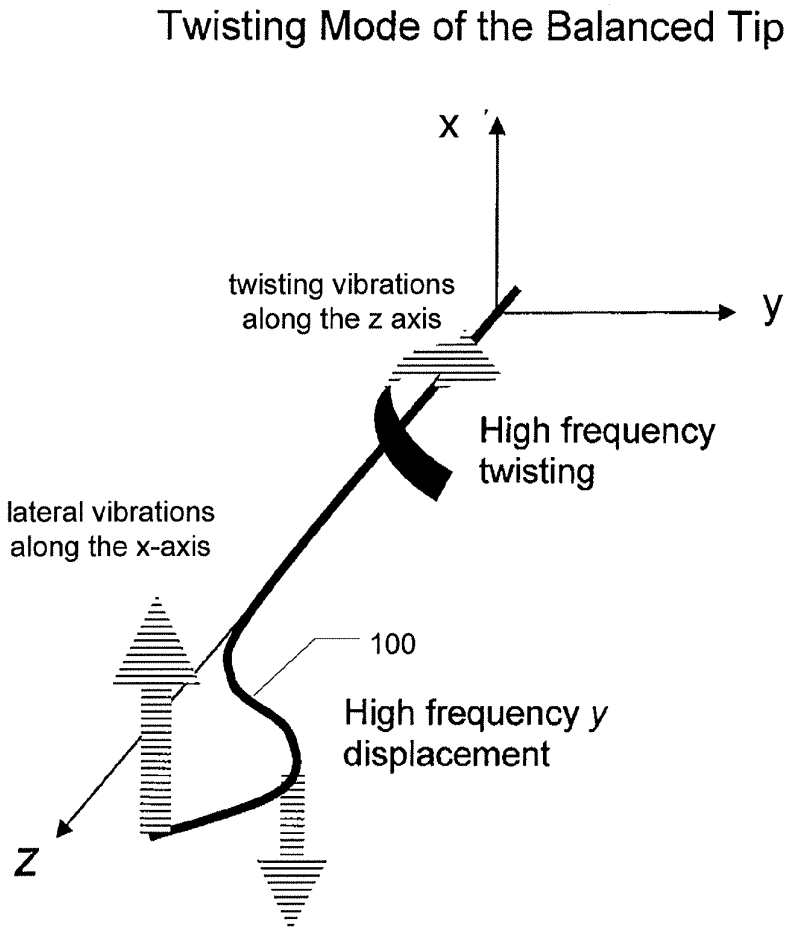
Twisting Mode of the Balanced Tip
x
y
z
twisting vibrations
along the z axis
High frequency
twisting
lateral vibrations
along the x-axis
100
High frequency y
displacement

FIG. 6

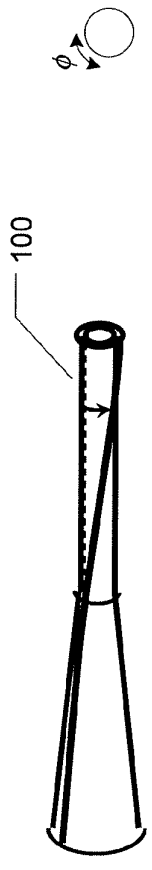

Straight tip

$$\ddot{\phi} = \frac{1}{\rho I(z)} \frac{\partial}{\partial z} \left(C(z) \frac{\partial \phi}{\partial z} \right)$$

Curved tip

$$\ddot{\phi} = \frac{1}{\rho I(z)} \frac{\partial}{\partial z} \left(C(z) \frac{\partial \phi}{\partial z} \right) - \frac{d^2 I(z)}{dz^2} \left(E I_y(z) \left(\frac{d^2 u_x}{dz^2} - \phi \frac{d^2 I(z)}{dz^2} \right) \right)$$

$$\ddot{\phi} = \frac{\partial^2 \phi}{\partial t^2} \qquad I(z) = \frac{\pi}{2} \left(R_2^4(z) - R_1^4(z) \right) \qquad C(z) = I(z) * \mu$$

FIG. 7a

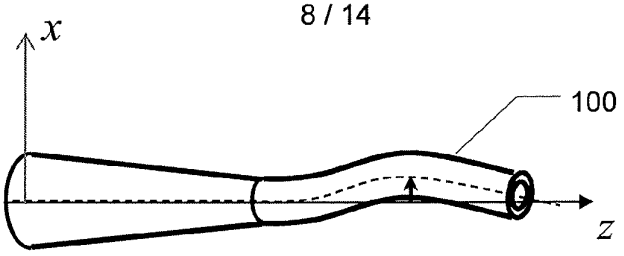

Lateral displacement u_x

Straight tip

$$\ddot{u}_x = \frac{1}{\rho S(z)} \frac{d^2}{dz^2} \left(E I_y(z) \frac{d^2 u_x}{dz^2} \right)$$

Curved tip

$$\ddot{u}_x = \frac{1}{\rho S(z)} \frac{d^2}{dz^2} \left(E I_y(z) \left(\frac{d^2 u_x}{dz^2} - \phi \frac{d^2 l(z)}{dz^2} \right) \right)$$

$$\ddot{u}_x = \frac{\partial^2 u_x}{\partial t^2} \qquad I_y(z) = \frac{\pi}{4} \left(R_2^4(z) - R_1^4(z) \right)$$

$$S(z) = \pi \left(R_2^2(z) - R_1^2(z) \right)$$

FIG. 7b

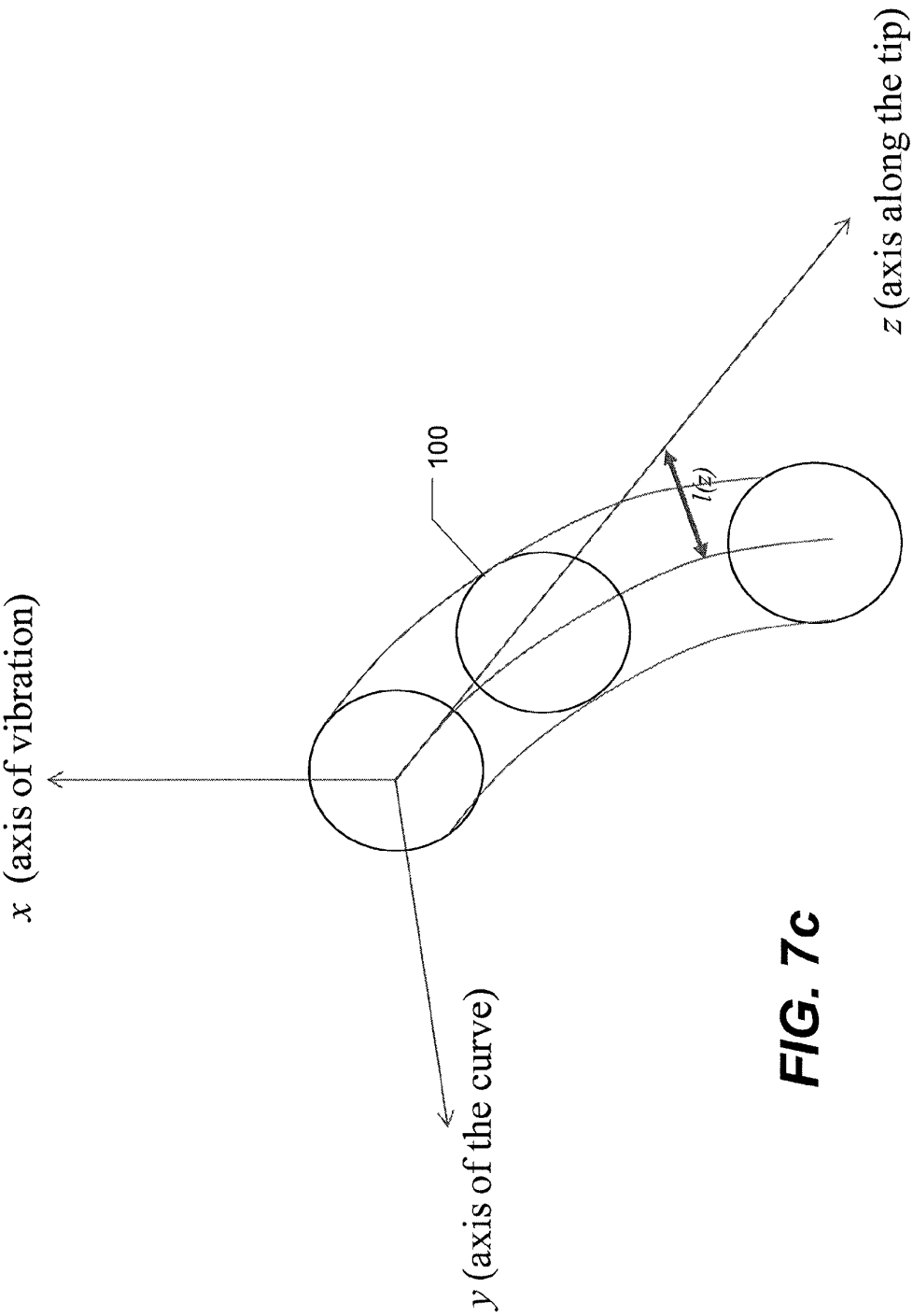
x (axis of vibration)
y (axis of the curve)
z (axis along the tip)
100
(4)1

FIG. 7c

Input: Tip Shape

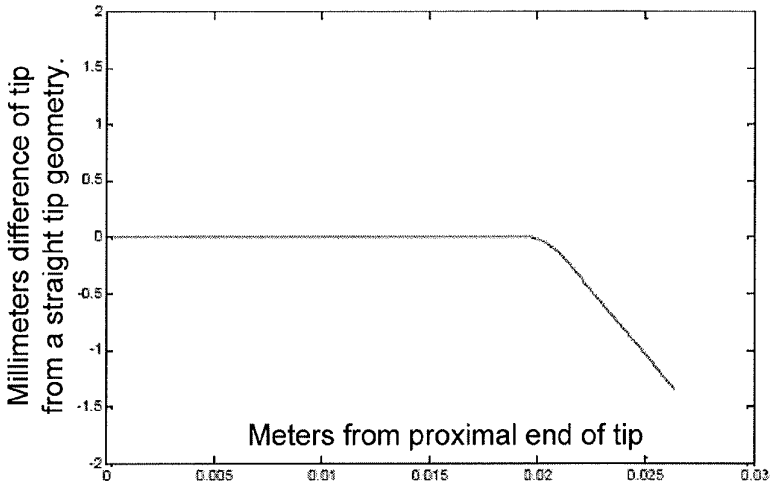

Output: Displacements of Twisting Mode

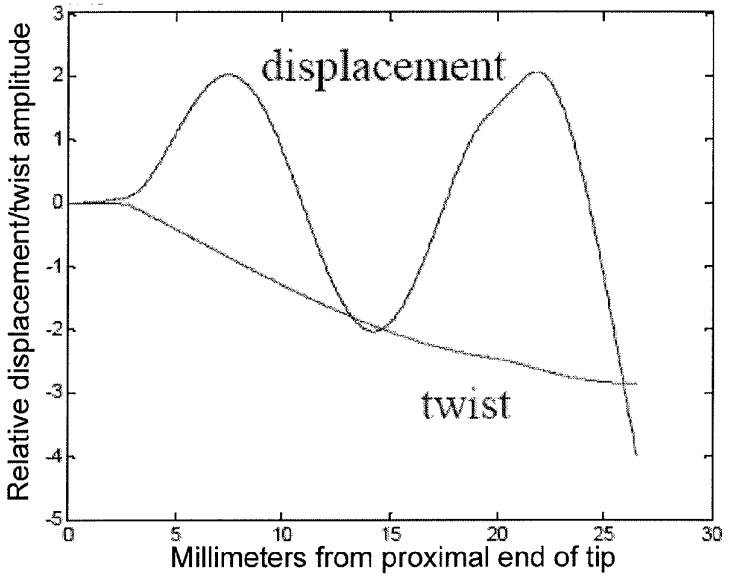

FIG. 8a

Input: Tip Shape

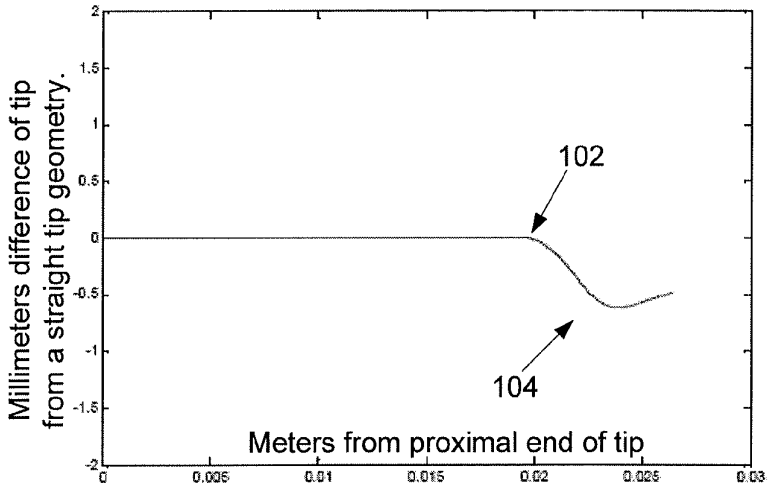

Output: Displacements of Twisting Mode

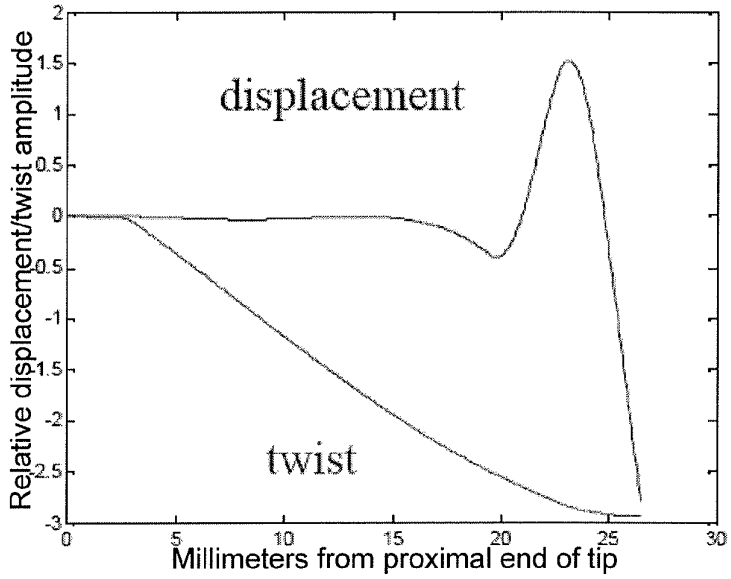

FIG. 8b

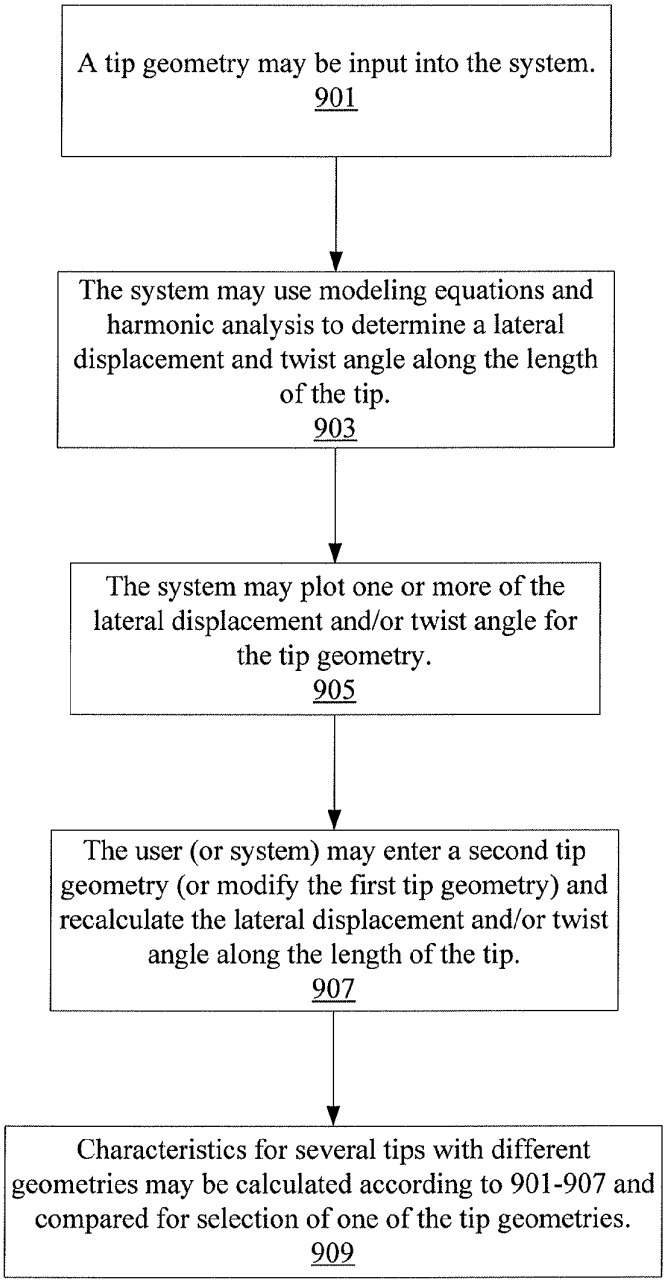
A tip geometry may be input into the system.
901
The system may use modeling equations and harmonic analysis to determine a lateral displacement and twist angle along the length of the tip.
903
The system may plot one or more of the lateral displacement and/or twist angle for the tip geometry.
905
The user (or system) may enter a second tip geometry (or modify the first tip geometry) and recalculate the lateral displacement and/or twist angle along the length of the tip.
907
Characteristics for several tips with different geometries may be calculated according to 901-907 and compared for selection of one of the tip geometries.
909

FIG. 9

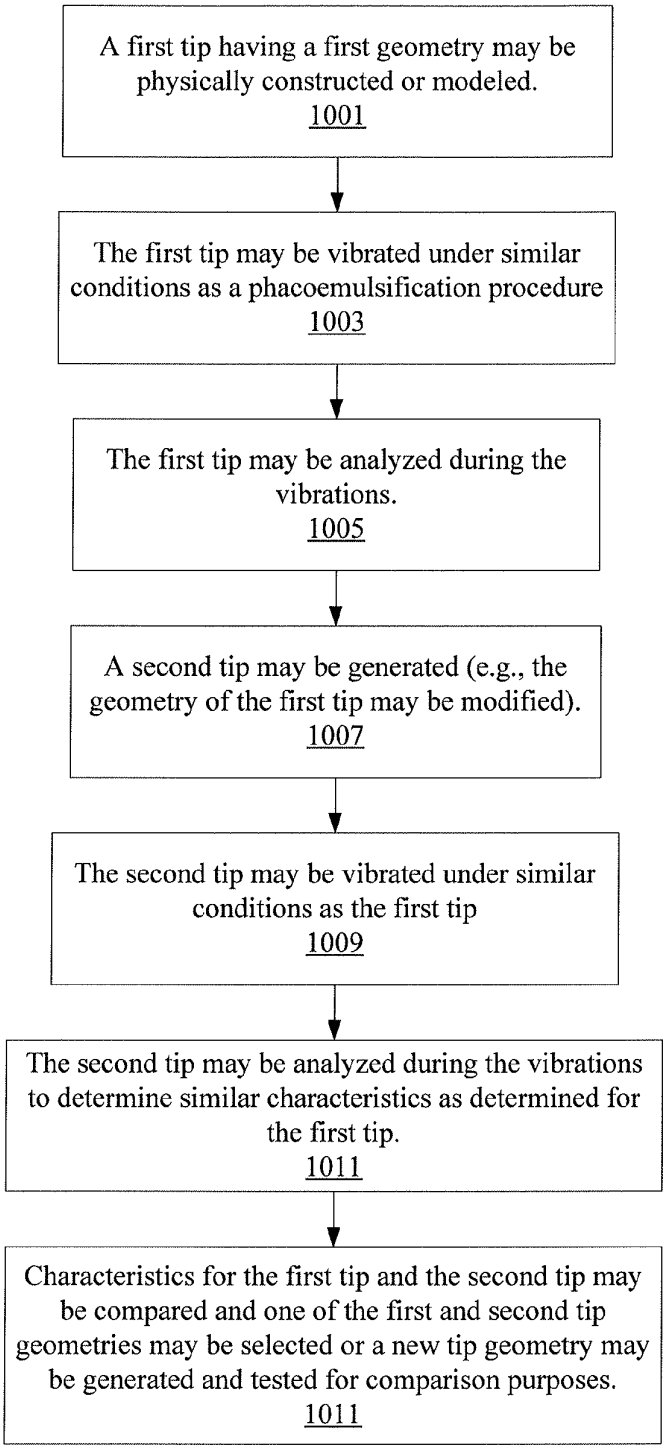
A first tip having a first geometry may be physically constructed or modeled.
1001
The first tip may be vibrated under similar conditions as a phacoemulsification procedure
1003
The first tip may be analyzed during the vibrations.
1005
A second tip may be generated (e.g., the geometry of the first tip may be modified).
1007
The second tip may be vibrated under similar conditions as the first tip
1009
The second tip may be analyzed during the vibrations to determine similar characteristics as determined for the first tip.
1011
Characteristics for the first tip and the second tip may be compared and one of the first and second tip geometries may be selected or a new tip geometry may be generated and tested for comparison purposes.
1011

FIG. 10

Balanced Tip	*OD*	*ID*	*L*	L_e	x_1	x_2	α_1	y_1	y_1	α_2	Bevel
Tip 1	.033	.0225	1.174	.308	.252	.153	-19	.152	.055	37	Up 30 or 45 degrees
Tip 2	.033	.0225	1.175	.308	.258	.155	-19	.154	.060	36	Down 30 degrees
Tip 3	.0315	.0225	1.175	.308	.252	.153	-19	.152	.058	36	Up 30 or 45 degrees
Tip 4	.0315	.0225	1.185	.308	.252	.153	-19	.152	.058	36	Down 30 degrees
Tip 5	.028	.020	1.177	.312	.238	.121	-12	.121	.043	27	Up 30 or 45 degrees
Tip 6	.028	.020	1.187	.312	.244	.127	-12	.127	.049	27	Down 30 degrees

FIG. 11