Feb. 6, 1968 W. K. BERTHOLD 3,368,106

PRINTING CATHODE RAY TUBE APPARATUS ACHIEVING IMPROVED QUANTUM GAINS

Filed Aug. 13, 1964 2 Sheets-Sheet 1

Fig. 1

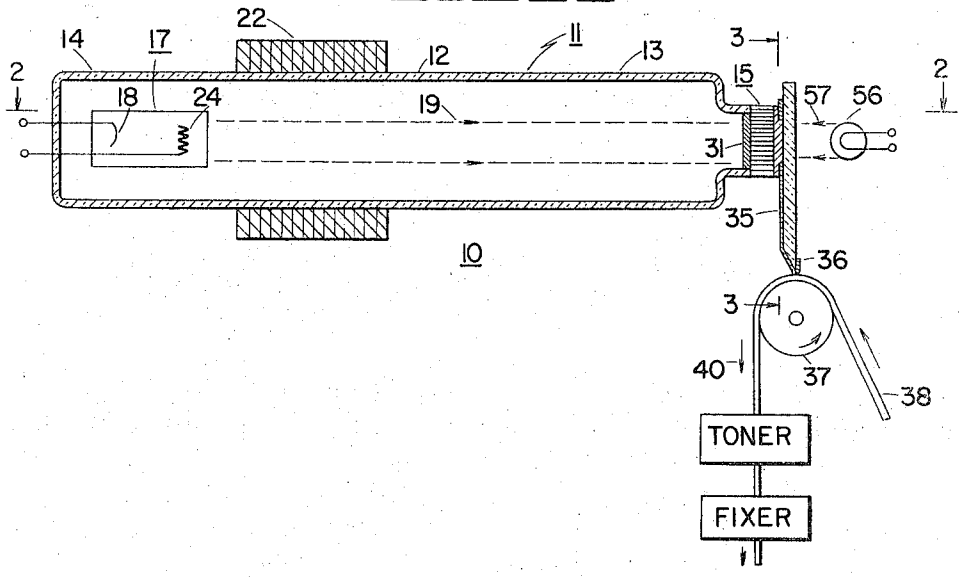

Fig. 2

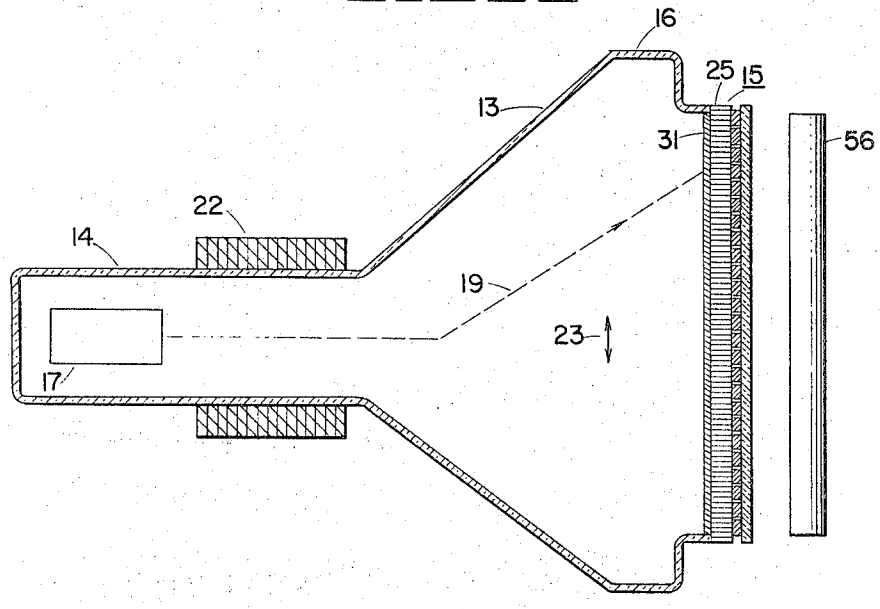

INVENTOR
WOLFGANG K. BERTHOLD
BY Wood, Dust & Irish
ATTORNEYS

Feb. 6, 1968 W. K. BERTHOLD 3,368,106

PRINTING CATHODE RAY TUBE APPARATUS ACHIEVING IMPROVED QUANTUM GAINS

Filed Aug. 13, 1964 2 Sheets-Sheet 2

FIG. 3

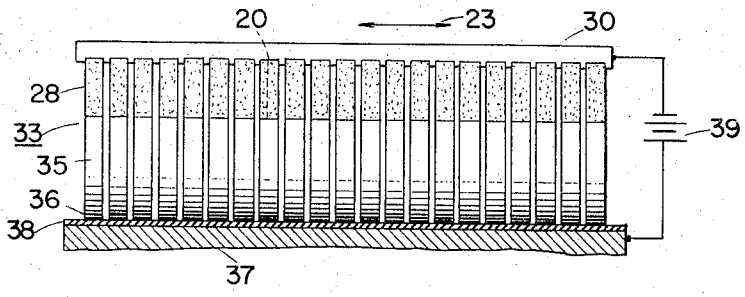

FIG. 5

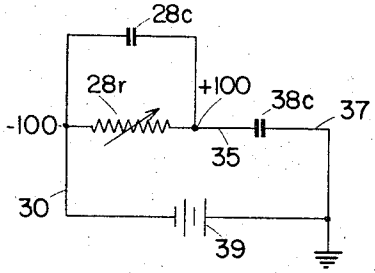

FIG. 6

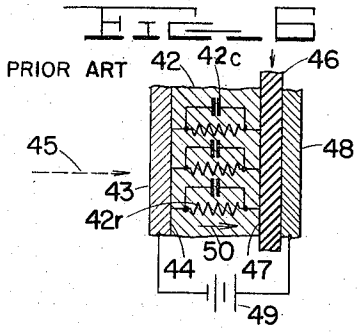

FIG. 4

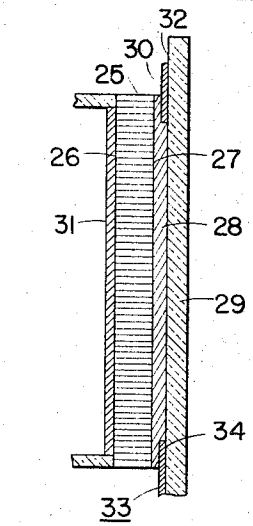

FIG. 7

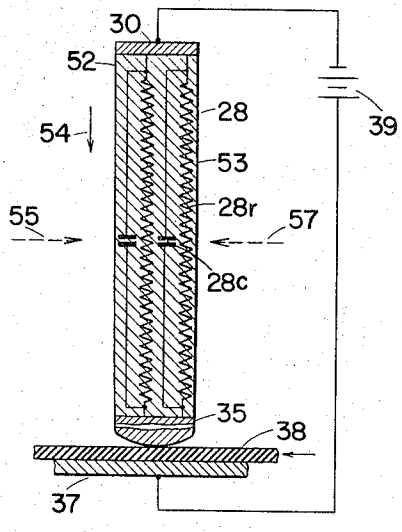

INVENTOR
WOLFGANG K. BERTHOLD
BY Wood, Dust & Irish
ATTORNEYS

United States Patent Office 3,368,106 Patented Feb. 6, 1968

3,368,106

PRINTING CATHODE RAY TUBE APPARATUS ACHIEVING IMPROVED QUANTUM GAINS

Wolfgang K. Berthold, Fort Wayne, Ind., assignor to International Telephone and Telegraph Corporation, Nutley, N.J., a corporation of Maryland

Filed Aug. 13, 1964, Ser. No. 389,231
8 Claims. (Cl. 315—21)

ABSTRACT OF THE DISCLOSURE

The faceplate of a printing cathode ray tube has a photoconductive layer on a fiber optic sheet with electrodes along opposite edges of the photoconductor causing current flow therethrough in a direction parallel to the surfaces of the layer to provide a long time constant path. An extension of one electrode on a supporting base contacts a dielectric recording medium to transfer charges thereto.

This invention relates generally to printing cathode ray tube apparatus for converting an electrical signal into a corresponding optical image and for recording that image in visual form, and more particularly to printing cathode ray tube apparatus of the electrostatic printing type.

One type of high speed electrostatic printer utilizes a tube of the cathode ray type, a time-based electrical signal being used to modulate a scanning electron beam which excites a phosphor to develop a light image corresponding to the electrical signal. The light image is in turn optically coupled to a photoconductor thereby to produce charge carriers in the photoconductive material, the resultant charge pattern on the photoconductor being transferred to or from a dielectric media, such as paper. This charge pattern on the dielectric media is in turn rendered visible through conventional xerographic techniques.

Conventional photoconductors have a high dark resistance, i.e., high resistance in the absence of light, however, upon excitation by light, photoconductive charge carriers are generated within the photoconductor causing its resistance to decrease to a much lower level, i.e., a low light resistance. This decrease in resistance upon the excitation of a photoconductor with light occurs very rapidly, however, upon removal of the light, the photoconductivity continues for an appreciable time, i.e., the photoconductive charge carriers continue to traverse the photoconductor, and thus the decay time of a photoconductor is considerably longer than its excitation time. This characteristic of photoconductors is referred to as bulk photoconductivity.

In order to obtain a satisfactory black and white print by electrostatic printing, a certain charge density, i.e., about 3.6×10^{-7} coulomb per square inch, must be added to or removed from the printing medium. In order to obtain this charge transfer between the photoconductor and the printing medium with the minimum beam current in the cathode ray tube, it has been proposed to utilize the bulk photoconductivity of the photoconductor by providing a stationary photoconductor; such an arrangement is described and illustrated in U.S. Patent No. 3,277,237, issued Oct. 4, 1966 and assigned to the assignee of the present application. The bulk photoconductivity of a photoconductor, i.e., its photoconductive decay time, potentially permits a quantum gain of greater than unity. Quantum gain is expressed as the number of charge carriers which traverse the photoconductor per charge carrier released by an incident photon from the phosphor. Thus, if one light photon causes one photoconductive charge carrier to traverse the photoconductor

and thus to transfer a charge to or from the printing medium, a quantum gain of unity is provided, whereas if as the result of impingement of one photon upon the photoconductor, more than one charge carrier is caused to traverse the photoconductor and thus to transfer a charge to or from the printing medium, a quantum gain of greater than unity is provided. Thus, it is possible to take advantage of the continued photoconductivity of the photoconductor during its decay time following removal of the incident light to secure a quantum gain greater than unity. This in turn permits provision of the requisite charge density with lower level electron beam current, in turn reducing the electron beam spot size and thus increasing the resolution, reducing the power requirements of the cathode ray tube and its associated electronics, and permitting printing at high speeds.

The long photo-response decay time and accompanying relatively low resistivity of all known high gain photoconductors has heretofore restricted the quantum gains potentially available. In prior systems employing stationary photoconductors, a layer of photoconductive material is provided having one surface abutting the faceplate of the cathode ray tube and thus receiving light from the phosphor, and having its other surface engaging the printing medium, commonly paper. The photoconductor and the printing medium thus form a resistance-capacitance circuit, the printing medium forming the capacitance element of the circuit. With the direction of travel of the charge carrier through the photoconductive layer being transverse with respect to the two surfaces of the photoconductive layer and with the resistance of the photoconductor being very low during its photoconductive state, the RC time constant of the circuit is thus relatively short compared with the photoconductive decay time of the photoconductor. Thus, the capacitance element of the circuit, i.e., the printing medium, is fully charged or discharged, as the case may be, prior to expiration of the photoconductive decay time, and thus charge carriers which are rendered available during the remainder of the photoconductive decay time and which thus could be utilized for charge transfer to or from the printing medium are wasted. Thus, the maximum quantum gain potentially available by reason of the bulk photoconductivity of the photoconductor has not heretofore been fully utilized.

It is accordingly an object of the invention to provide improved printing cathode ray tube apparatus.

Another object of the invention is to provide improved printing cathode ray tube apparatus in which quantum gains higher than those heretofore available are provided.

In accordance with the broader aspects of the invention, the impedance of the resistance-capacitance circuit formed by the photoconductor and the printing medium is proportioned so that the RC time constant of the circuit is more nearly matched to the photoconductive decay time of the photoconductor so that maximum use is made of the available charge carriers during the decay time. More particularly, in accordance with the invention, the direction of charge carrier movement and thus current flow through the photoconductive layer is parallel to the opposite surfaces rather than transverse thereto, thus substantially increasing the resistance of the photoconductor without a corresponding decrease in its intrinsic capacitance. This arrangement, therefore, permits adjustment of the resistance of the photoconductor to the capacitance of the printing medium so that the time constant of the RC circuit may be matched to the decay time of the photoconductor.

The above-mentioned and other features and objects of this invention and the manner of attaining them will

become more apparent and the invention itself will be best understood by reference to the following description of an embodiment of the invention taken in conjunction with the accompanying drawings, wherein:

FIG. 1 is a side view, partly in cross-section of the printing cathode ray tube apparatus of the invention;

FIG. 2 is a cross-sectional view taken along the line 2—2 of FIG. 1;

FIG. 3 is a cross-sectional view taken along the line 3—3 of FIG. 1;

FIG. 4 is an enlarged fragmentary cross-sectional view of the faceplate photoconductor, and electrode arrangement of the invention;

FIG. 5 is a schematic diagram showing a simplified equivalent circuit for one of the photoconductive elements of the apparatus of the invention;

FIG. 6 is a schematic diagram useful in explaining the deficiency of prior systems; and

FIG. 7 is a schematic diagram useful in explaining the present invention.

Referring to FIGS. 1 through 4 of the drawing, the printing tube apparatus of the invention, generally indicated at **10**, comprises a cathode ray tube **11** having an evacuated envelope **12**, the envelope **12** having a funnel portion **13** with its small end joined to a neck portion **14**, and a faceplate assembly **15** sealed to the large end **16** of the funnel portion **13**. In the illustrated embodiment wherein scanning in one direction is accomplished by movement of the printing paper as will be hereinafter more fully described, and thus in which it is only required that the electron beam be deflected in one direction at right angles to the direction of movement of the printing paper, the funnel portion **13** is flattened to provide an elongated cross-sectional configuration at its large end **16** in order to reduce space requirements.

A conventional electron gun **17** is positioned within neck portion **14** and includes a conventional cathode **18** together with other conventional electrodes (not shown) for forming and directing electron beam **19** toward faceplate assembly **15**. For a reason to be hereinafter more fully described, electron gun **17** forms beam **19** into a straight line as it approaches faceplate assembly **15** as shown in the dashed line **20** in FIG. 3. The straight line electron beam **19** is disposed at right angles to the direction of deflection of the electron beam provided by conventional deflection yoke **22**, as shown by arrows **23** in FIGS. 2 and 3. Electron gun **17** also includes a conventional control grid **24** adapted to be connected to a source of time-based video signals for modulating the electron beam **19** in response thereto, as is well known to those skilled in the art.

In the illustrated embodiment, the faceplate assembly **15** comprises an elongated fiber-optic sheet **25** hermetically sealed, as by means of a glass frit seal, to the open end of the large end **16** of envelope **12**. It will be understood that the fiber-optic material from which sheet **25** is formed is not a part of the present invention, such fiber-optic materials being described in numerous technical articles including an article entitled "Fiber Optics" by Narinder S. Capany, appearing in Scientific American for November 1960. Optical fibers are essentially small diameter rods of transparent dielectric material, such as 1 to 2 mil diameter glass fibers. Light conduction along transparent rods is well known, and when a large number of such rods or fibers are sealed together in the form of a sheet having flat opposite sides and with the fibers extending transversely between the sides, an optical image is transmitted from one side to the other with high light efficiency.

It will be seen that the optical fibers forming sheet **25** extend generally transversely between the opposite surfaces **26**, **27**. Surface **26** of fiber-optic sheet **25** facing electron gun **17** and thus being within the vacuum in envelope **12** is coated with a layer **31** of a suitable high resolution phosphor chosen to have spectral characteristics matching those of the photoconductive elements **28** to be hereinafter described. It will be readily understood that in order to increase the brightness of the optical image produced in the phosphor layer **31** in response to impingement by the electron beam **19** and also for increasing the resistance to ion bombardment, a thin aluminum film may be deposited upon the surface of the phosphor, as is well known to those skilled in the art. It will now be readily seen that the optical or light image produced in the phosphor layer **31** in response to the electron beam **19** will be transmitted by the fiber-optic sheet **25** to its outer surface **27** with minimum loss of resolution.

In accordance with the invention, a sheet **29** of insulating material is provided, which in the preferred embodiment of the invention has light transmitting properties, for a purpose to be hereinafter described. An elongated conductive strip or electrode **30** is mounted on surface **32** of sheet **29**, as by being evaporated thereon, strip **30** extending in a direction parallel with the scanning direction **23**. A plurality of elongated spaced parallel conductive electrodes or strips **33** are likewise mounted on surface **32** of sheet **29** and extend at right angles to strip **30**, strips **33** having top portions **34** which are respectively spaced from strip **30**, and extension portions **35** extending downwardly therefrom. A plurality of relatively thin, elongated, spaced parallel photoconductive elements **28** are deposited on surface **32** of sheet **29** respectively extending between and contacting the common electrode strip **30** and the upper ends **34** of electrode strips **33**. The supporting sheet **29** with the electrodes **30**, **33** and the photoconductive elements **28** deposited thereon is arranged with the photoconductive elements **28** respectively abutting the outer surface **27** of the fiber-optic sheet **25** and with the photoconductive elements **28** thus extending in a direction at right angles to the scanning direction **23** and respectively parallel with the straight-line electron beam **19**. Thus, the electron beam **19** excites the phosphor **31** to provide a light line which illuminates each photoconductive element **28** throughout its full length as the beam is scanned across the phosphor **31** in the direction **23**, as shown by the dashed line **20** in FIG. 3.

Each of the elongated conductive strips **35** has its end **36** formed as a contact, as shown in FIGS. 1 and 3. A conductive roller **37** is provided, closely spaced from contact ends **36** of the conductive strips **35** and an elongated sheet **38** of paper or other suitable dielectric material is provided on a suitable supply roll (not shown) and is passed around roller **37** so that it is in engagement with the outer surface of roller **37** and with the contact ends **36** of each of the conductive strips **35**. A suitable source **39** of potential, such as —100 volts is coupled across the common conductive strip **30** and roller **37**, as shown in FIG. 3.

It will be seen that the photoconductive strips **28** may be sintered initially on the insulating base **29** and the resulting assembly thereafter arranged with the photoconductive elements **28** abutting the outer surface **27** of the fiber-optics sheet **25**. With this arrangement, the photoconductive element, conductive strip and insulating base assembly may be removed and replaced if necessary. It will further be seen that the photoconductive elements **28** can readily be sealed against moisture and that the contact with the sheet **38** of paper is made by the conductive strips **35** thereby eliminating wear due to abrasion caused by direct engagement of the moving paper surface with the photoconductor, as in the case of prior apparatus.

Referring now to FIG. 5, one of the photoconductive elements **28** is shown schematically by the variable resistance **28***r* and the capacitance of the paper sheet **38** defined between the respective photoconductive strip **35** and roller **37** is shown as capacitor **38***c*. The intrinsic capacitance of the photoconductive element **28** is shown as capacitor **28***c*, however, the resistance of the paper sheet **38** is so high compared with the resistance of the photoconductive element **28**, under either light or dark condi-

tions, that it is here ignored. It will now be seen that the photoconductive element 28*r* and the paper capacitance 38*c* form a Series Circuit connected across potential source 39. It will be observed that the resistance 28*r* of the photoconductive element 28 is variable from a high value under dark conditions to a much lower value in response to incident light. By virtue of the high dark resistance 28*r* of the photoconductive element 28, and with the sheet of paper 38 moving in the direction shown by the arrow 40 in FIG. 1, the capacitance 38*c* of the paper sheet 38 will not be appreciably charged (or discharged if the paper is precharged as hereinafter described) in the absence of incident light impinging upon the photoconductive element 28. However, in response to impingement of light upon the photoconductive element 28, its shunt resistance 28*r* falls to a low value, thus applying substantially all of the voltage of source 39 across the paper capacitance 38*c*, thus charging the capacitance 38*c* in the event that the paper has not previously been precharged. Alternatively, if the paper has been precharged to some level, such as +100 volts and with the common conductive strip 30 connected to the negative side of source 39 having a potential such as −100 volts, the sudden reduction in the resistance 28*r* will cause the capacitance 38*c* to discharge through resistance 28*r*. It will thus be seen that as the paper sheet 38 is moved in direction 40, a charge pattern will be scanned onto the moving paper sheet 38 in response to the light image impressed upon the photoconductive elements 28 from the phosphor 27.

It will further be observed that the RC circuit 28*r*, 38*c* has a time constant depending upon the values of resistance 28*r* and capacitance 38*c*, i.e., capacitance 38*c* will become fully charged or alternatively fully discharged at a time depending upon the values of resistance 28*r* and capacitance 38*c*. As pointed hereinabove, the photoconductivity of photoconductive element 28 continues after the incident light has been removed and thus, resistor 28*r* may remain at a lower value, in contrast with its dark resistance, for a period of time following complete charging or discharging of capacitance 38*c* as the case may be, i.e., the photoconductive decay time of photoconductive element 28 may be considerably longer than the RC time constant of the RC circuit 28*r*, 38*c*.

Referring now briefly to FIG. 6, in prior cathode ray printing tube apparatus, such as that described and illustrated in the aforementioned U.S. Patent No. 3,277,237, a relatively thin layer 42 of photoconductive material was provided having a transparent conductive coating 43 on its surface 44, conductive coating 43 in turn being arranged abutting the faceplate of the cathode ray tube (not shown) so as to receive light from the phosphor as shown by the dashed line 41. The moving sheet of printing paper 46 was arranged in engagement with or closely adjacent the other surface 47 of the photoconductive layer 42 with conductive contact member 48, preferably a conductive roller, engaging the other side of the paper sheet 46 and with a source of potential 49 coupled across a transparent conductive layer 43 and the contact 48. It will thus be seen that the direction of movement of the charge carriers and current through the photoconductive layer 42 was transverse with respect to surfaces 44, 47 of conductive layer 42, as shown by the arrow 50. Thus, since the areas of the opposite surfaces 44, 47 of the photoconductive layer 42 were large as compared to its thickness, it may be considered that the conductive layer 42 was formed of a large plurality of parallel resistance elements 42*r* each having its own shunt capacitance 42*c*. It will thus be seen that with this arrangement under light conditions, the resistance of the photoconductive layer 42 taken transversely between its surfaces 44, 47 was extremely low, thus providing with the capacitance of paper 46 an RC time constant much lower than the photoconductive decay time of the photoconductive layer 42. Thus, as indicated, the capacitance of the paper sheet

46 would be fully charged or discharged, as the case may be, long before the photoconductivity of the photoconductive layer 42 ceased. Thus, a large number of charge carriers rendered available during this continued photoconductivity period were not utilized for charging or discharging the capacitance of paper sheet 46, and thus the quantum gain potentially available due to the long photoresponse time of the photoconductive layer 42 was not fully utilized.

It will now be seen that greater quantum gains can be obtained by increasing the RC time constant of the photoconductor-paper capacitance circuit so as to equal or closely approximate the photoconductive decay time.

Referring now to FIG. 7 in which the same reference numerals as those employed in FIGS. 1 through 5 are used, it will be seen that in accordance with the invention, the conductive strips or electrodes 30, 35 contact the photoconductive elements 28 adjacent their opposite edges so that the direction of movement of the charge carriers and thus the direction of current flow in the photoconductive elements 28 is parallel with its opposite surfaces 52, 53, as shown by the arrow 54, rather than transverse thereto as in the case shown in FIG. 6. It will be understood that surface 52 of the photoconductive elements 28 is that which abuts the outer surface 27 of the fiber-optic sheet 25 so that the light from the phosphor 31 impinges upon surface 52, as shown by a dashed line 55. It will now be seen that with contact being made to the photoconductive elements 28 adjacent opposite peripheral edges, the resistance 28*r* is very substantially increased without a corresponding decrease in the intrinsic shunt capacitance 28*c*. Thus, by appropriate choice of the geometrical dimensions of the photoconductive elements 28, i.e., their thickness and particularly their length, adjustment of the resistance 28*r* of each photoconductive element 28 to the capacitance 38*c* of the printing paper 38 is permitted thereby to provide an RC time constant matching the photoconductive decay time, and in turn to utilize all of the photoresponsive time of the photoconductive elements 28 thus to obtain a much larger quantum gain, this increase in the RC time constant being accomplished without sacrifice in resolution.

Commercially available printing paper having an insulating mylar film of .02 mil (5 micron), when previously charged to approximately +100 volts should be discharged to 2 volts or less in the bright parts and to 80 volts or more in the dark parts for maximum contrast. This requirement, however, requires a photoconductor having a relatively high ratio of light to dark resistance, requires that the photoconductor be exactly tailored to the system, and importantly is wasteful of sensitivity since in the charge decay to less than 2% of the initial 100 volt charge, sensitivity of the photoconductor drops by more than a magnitude toward the end of the writing process; the sensitivity versus voltage follows a power law with the exponent between 1 and 3 in typical commercially available photoconductors. Therefore, in the preferred embodiment, highlight illumination or light bias for the photoconductive elements 28 is provided by a suitable lamp 56 illuminating the rear surface 53 of the photoconductive elements 28 through the light-transmitting insulating sheet 29, as shown by the dashed lines 57, the light illuminating elements 28 having an intensity less than that provided by phosphor layer 31. Thus, with the printing paper sheet 38 precharged to a level of approximately +100 volts and with the common conductive electrode 30 connected to a negative potential of such a value as required by the highlight illumination to discharge the paper to less than 2 volts, better contrast is provided, and photoconductors may be employed having light to dark ratios of 2:1 or less, the light bias being employed to reduce the photoconductive response time. This arrangement permits operation of the photoconductor in the high sensitivity range and further

facilitates adjustment of the sensitivity to proper values, as above described.

While there have been described above the principles of this invention in connection with specific apparatus, it is to be clearly understood that this description is made only by way of example and not as a limitation to the scope of the invention.

What is claimed is:

1. Printing cathode ray tube apparatus comprising: faceplate means having inner and outer surfaces; means for forming and directing an electron beam toward the inner surface of said faceplate means, means for modulating said beam in response to an electrical signal, and means for deflecting said beam along one path to scan the same over said faceplate means; a layer of phosphor material on the inner surface of said faceplate means and impinged by said beam whereby a light image is provided in response to said beam; a layer of photoconductive material having opposite surfaces and opposite peripheral edges, said photoconductive material having one of said opposite surfaces disposed over said outer surface of said faceplate means to receive light therefrom and said opposite edges disposed along the scanning path of said beam; first and second electrode means respectively connected to said photoconductive material along said opposite edges to cause current flow therebetween through said photoconductive material in a direction parallel to said opposite surfaces, said second electrode means having a portion extending away from said face plate and photoconductive material in said direction parallel to said opposite surfaces; a third electrode means closely spaced from said second electrode means; a sheet of dielectric material extending between and contacted by said second and third electrode means; and a source of potential coupled across said first and third electrode means, said photoconductive material having a resistance which decreases in response to light from said phosphor layer to transfer a charge to said dielectric sheet and having a predetermined decay time, said dielectric sheet having a capacitance forming a resistance-capacitance circuit with said photoconductive material, the length of said photoconductive material having current flow therethrough being proportioned so that the time constant of said circuit is close to the decay time of said photoconductive material.

2. The apparatus of claim 1 wherein said photoconductive material comprises a plurality of elongated closely spaced parallel elements arranged successively along said scanning path, said opposite edges being at opposite ends of said elements, respectively, wherein said first electrode means comprises a continuous electrode element extending along said path and connected to each of said elements adjacent one of said ends thereof, and wherein said second electrode means comprises a plurality of electrode elements arranged successively along said scanning path and each respectively connected to said photoconductive elements adjacent the other of said ends thereof, said plurality of electrode elements respectively having portions extending away from said photoconductive elements in said parallel direction and respectively adapted to contact said dielectric medium.

3. The apparatus of claim 2 wherein said beam forming and directing means forms said beam to define a light line on said phosphor layer, said light line being parallel with said photoconductive elements and substantially the same length.

4. The apparatus of claim 1 wherein said one surface of said photoconductive material abuts said outer surface of said faceplate means.

5. The apparatus of claim 4 wherein said other surface of said photoconductive material and said first and second electrode means are supported on an insulating base member.

6. The apparatus of claim 1 further comprising means for continuously illuminating said photoconductive material with light having an intensity less than that of said light image thereby providing a light bias for said photoconductive means.

7. The apparatus of claim 5 wherein said base member has light transmitting properties and further comprising means disposed on the side of said base member remote from said photoconductive material for continuously illuminating said other surface thereof with light having an intensity less than that of said light image thereby providing a light bias for said photoconductive material.

8. The apparatus of claim 1 wherein said faceplate means comprises a fiber optics sheet with the fibers thereof extending generally transversely between the inner and outer surfaces thereof, and wherein said one surface of said photoconductive material abuts said outer surface of said sheet and said other surface of said photoconductive material and said first and second electrode means are supported on an insulating base member.

References Cited

UNITED STATES PATENTS

3,126,548	3/1964	McNaney	346—74
3,267,555	8/1966	Berger et al.	29—155.5
3,277,237	10/1966	Wolfgang	178—6.6

JOHN W. CALDWELL, *Primary Examiner.*

R. K. ECKERT, JR., *Assistant Examiner.*