E. C. McKENZIE-MARTYN AND F. A. HOWARD.

PRIMING DEVICE.

APPLICATION FILED OCT. 22, 1920.

1,394,921. Patented Oct. 25, 1921

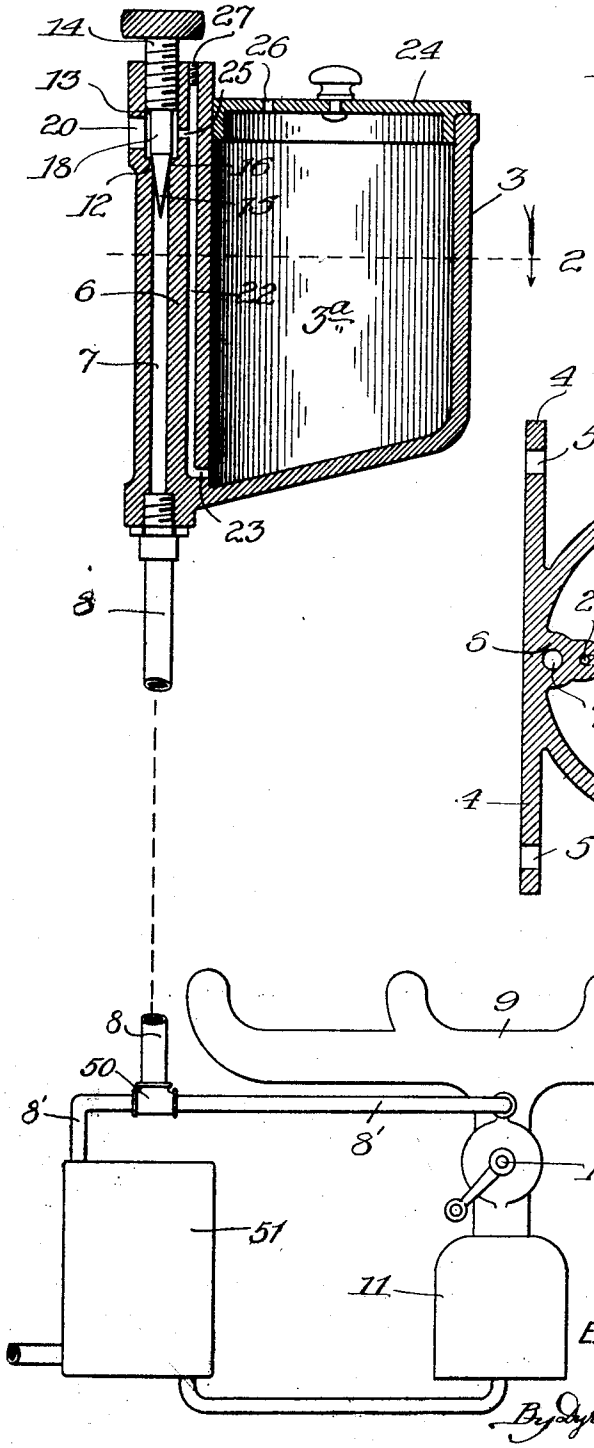

Inventors:
EDWARD C. McKENZIE-MARTYN
Frank A. Howard,
By Dyrenforth, Lee, Chritton & Wiles,
Att'ys.

UNITED STATES PATENT OFFICE.

EDWARD C. McKENZIE-MARTYN AND FRANK A. HOWARD, OF ELIZABETH, NEW JERSEY, ASSIGNORS TO STANDARD OIL COMPANY, OF BAYONNE, NEW JERSEY, A CORPORATION OF NEW JERSEY.

PRIMING DEVICE.

1,394,921. Specification of Letters Patent. Patented Oct. 25, 1921.

Application filed October 22, 1920. Serial No. 418,831.

To all whom it may concern:

Be it known that we, EDWARD C. McKENZIE-MARTYN, a subject of the King of Great Britain, residing at Elizabeth, in the county of Union and State of New Jersey, and FRANK A. HOWARD, a citizen of the United States, residing at Elizabeth, in the county of Union and State of New Jersey, have invented a new and useful Improvement in Priming Devices, of which the following is a specification.

This invention relates to improvements in priming devices, and more especially to a priming device adapted to be used on a motor vehicle to assist in starting the engine thereof in cold weather, or under other adverse conditions.

In that form of device embodying the features of our invention shown in the accompanying drawings, Figure 1 is a vertical sectional view of our improved priming device showing diagrammatically the manner of attaching it to the intake manifold of an internal combustion engine, and Fig. 2 is a view taken as indicated by the line 2 of Fig. 1.

As shown in the drawings, the priming device comprises primarily a cylindrical casting 3 comprising the cup shaped auxiliary fuel reservoir 3^a provided with a tangentially arranged plate 4 on one side having bolt or screw holes 5 adapted for attaching the device to the dash, cowl, or other desired part of a motor vehicle. Preferably, it should be attached where it will be accessible.

The wall of the auxiliary fuel reservoir 3^a is thickened at one side as indicated by 6 and provided with two vertical parallel passages 7 and 22, the former being somewhat larger and extending entirely through the casting, and the latter extending from the top to a point about opposite the lowest part of the fuel reservoir 3^a. Fastened to the bottom of the passage 7 is a pipe 8 which is connected by means of the T 50 to the pipe 8′ which leads from the intake manifold 9 of an internal combustion engine to the top of the vacuum feed tank 51. The point of entry of the pipe 8′ into the manifold 9 is slightly above the throttle and main carbureter of the engine which are respectively indicated diagrammatically in the drawings by 10 and 11. Near the top, the passage 7 is slightly enlarged to form the shoulder 12. The upper enlarged part of the passage 7 forms a mixing chamber indicated by 13. Above the mixing chamber 13, the passage 7 is threaded and adapted to receive the threaded valve screw 14, pointed at its lower end as indicated by 15, and adapted to be screwed downwardly and inwardly to close the passage 7 by seating on the seat 16 formed just below the shoulder 12. The valve screw 14 is decreased in diameter as indicated by 18 and not threaded from a point at about its center downwardly to the point where the taper 15 commences. An air inlet or port 20 is provided through the outer wall to admit air into the mixing chamber 13. A small hole 23 is drilled or milled through the wall of the fuel reservoir 3^a close to the bottom to meet the lower end of the passage 22. A small jet opening 25 leads from the mixing chamber 13, at a point opposite the air intake 20, to the passage 22 near its upper end; and the upper end of the passage 22 above the jet 25 is closed by the small plug 27. A cover 24 provided with a small air inlet 26 is adapted to substantially cover the fuel reservoir 3^a.

In the operation of the device, the fuel reservoir 3^a is filled, or nearly filled with any suitable so-called priming fluid such as ether, or high test gasolene. The valve screw 14 is then screwed upwardly in order to open slightly the upper end of the passage 7. The engine is then turned over by means of the self-starter, or crank, or any other desired means, whereupon a slight vacuum or suction will be formed in the inlet manifold 9 which will cause priming fluid to be forced by atmospheric pressure from the fuel reservoir 3^a through the port 23 upwardly through the passage 22 and through the jet passage 25 into the mixing chamber 13. The suction or vacuum in the manifold 9 will also cause air to enter the mixing chamber 13 through the air inlet 20, where it will strike the priming fluid issuing in a jet from the opening 25 and vaporize the same in the manner in common use in car-

bureters. The mixture of air and vaporized priming fluid will be drawn downwardly through the mixture passage 7, pipe 8, and pipe 8' into the manifold 9, whence it will enter the cylinders of the engine. The suction or vacuum in the manifold 9 will also cause a suction from the top of the vacuum feed reservoir 51 in the ordinary manner, causing some of the vapor in the top of this reservoir to be drawn into the manifold with the mixture obtained from the priming device. The air inlet 20 and the mixture passage 7 are made sufficiently large, and the jet opening 25 is made sufficiently small, so that, by properly adjusting the valve screw 14, the correct proportion of air and priming fluid will be admitted into the mixing chamber 13 to form a mixture which, with the vapor obtained from the vacuum feed reservoir, will readily start the engine. The priming fluid used is preferably some liquid that will vaporize readily in cold weather and consequently form an explosive mixture, as hereinafter described, when all the apparatus is cold, or under other adverse conditions. In the use of the device, the throttle 10 is substantially closed so that only enough mixture is admitted to the engine from the main carbureter 11 to allow the engine to idle when warm. It is obvious, that when the engine is cold, the idling mixture (with the use of ordinary fuel) admitted from the carbureter 11 through the (substantially) closed throttle 10 will be too lean to start the engine alone. The regulating valve 14 of the priming device is adjusted as described above so that the mixture supplied from the priming device into the manifold, together with the vapor obtained from the vacuum feed reservoir and the mixture drawn from the carbureter 11, will form an explosive mixture which will start the engine when cold. In the use of the device, it is contemplated that the engine be started by using the priming device as explained above, and allowed to run until the priming fluid has been entirely exhausted from the fuel reservoir 3^a. The engine then being warm, is allowed to run in the normal way on the mixture obtained from the main carbureter 11 and the vapor from the vacuum feed reservoir. As the engine warms up, the mixture supplied from the carbureter 11 will become richer, and more explosive, and as this occurs the valve 14 can be (gradually) closed to cut off the mixture from the priming device as desired. In order to prevent the escape of fumes from the fuel reservoir 3^a, the valve 14 can be left open long enough to completely empty the fuel reservoir, whereupon it can be entirely closed, thus entirely cutting off the priming device from the engine. The slanting bottom of the fuel reservoir 3^a will assist all the fuel therein in draining down to the opening 23 where it will be sucked out of the reservoir as explained above.

While we have shown and described certain embodiments of our invention, it is to be understood that it is capable of many modifications. Changes therefore in the construction and arrangement may be made without departing from the spirit and scope of the invention as disclosed in the appended claims, in which it is our intention to claim all novelty inherent in our invention as broadly as possible in view of the prior art.

What we claim as new, and desire to secure by Letters Patent is:

1. The combination with an internal combustion engine, intake manifold, carbureter and throttle, of a priming device comprising an auxiliary fuel reservoir containing fuel, a mixture passage connected at one end to the manifold and having its other end provided with an air inlet and a fuel jet receiving fuel from the reservoir, and manually operated means for completely closing off flow through the mixture passage below the fuel jet.

2. The combination with an internal combustion engine, intake manifold, carbureter and throttle, of a priming device comprising an auxiliary fuel reservoir containing fuel, a mixture passage having one end connected to the manifold and its other end provided with an air inlet and fuel jet receiving fuel from the reservoir, and regulable means for closing off the mixture passage below the jet.

3. The combination with an internal combustion engine, intake manifold, carbureter and throttle, of a priming device comprising an auxiliary fuel reservoir containing fuel, a mixture passage having one end connected to the manifold, and the other end provided with an air inlet and a fuel jet receiving fuel from the reservoir, and a manually operated needle valve for closing off the mixture passage below the jet.

4. The combination with an internal combustion engine, intake manifold, carbureter and throttle, of a priming device comprising an auxiliary fuel reservoir, an integral mixture passage open at the top and connected at the bottom to the manifold, an air inlet entering the mixture passage near the top, and a fuel conduit leading from the bottom of the fuel reservoir to a point near the top of the mixture passage.

5. The combination with an internal combustion engine, intake manifold, carbureter and throttle, of a priming device comprising an auxiliary fuel reservoir, an integral mixture passage with its upper end open and threaded and adapted to receive a regulating valve and having its lower end connected to the manifold, an integral fuel conduit

leading from the bottom of the fuel reservoir to a point near the top of the mixture passage, an air inlet leading into the mixture passage near the top, and a regulating valve screwed into the top of the mixture passage and adapted to open or close the same below the jet and air inlet.

6. The combination with an internal combustion engine, intake manifold, carbureter and throttle, of a priming device comprising a fuel reservoir with its wall thickened at one side and provided with two parallel passages formed therein, one of relatively large size open at the top and connected at the bottom to the intake manifold, and the other smaller and extending from the top of the casting to a point near the bottom, with its upper end plugged and having an opening leading from its lower end to the bottom of the fuel reservoir and another opening leading from a point near its upper end below the plug to a point near the upper end of the larger passage.

7. The combination with an internal combustion engine, intake manifold, carbureter and throttle, of a priming device comprising a fuel reservoir with its wall thickened at one side and provided with two parallel passages formed therein, one of relatively large size open at the top and connected at the bottom to the intake manifold, and the other smaller and extending from the top of the casting to a point near the bottom, with its upper end plugged and having an opening leading from its lower end to the bottom of the fuel reservoir and another opening leading from a point near its upper end below the plug to a point near the upper end of the larger passage, the larger passage having a lateral opening from a point near its upper end to the air.

8. The combination with an internal combustion engine, intake manifold connected to a vacuum feed reservoir, carbureter and throttle, of a priming device comprising an auxiliary fuel reservoir containing fuel, and a mixture passage having one end connected to the connection between the manifold and vacuum feed reservoir and the other end provided with an air inlet and a fuel jet receiving fuel from the reservoir.

9. The combination with an internal combustion engine, intake manifold connected to a vacuum feed reservoir, carbureter and throttle, of a priming device comprising an auxiliary fuel reservoir containing fuel, a mixture passage connected at one end to the connection between the manifold and vacuum feed reservoir and having its other end provided with an air inlet and a fuel jet receiving fuel from the reservoir, and manually operated means for completely closing off flow through the mixture passage below the fuel jet.

10. The combination with an internal combustion engine, intake manifold connected to a vacuum feed reservoir, carbureter and throttle, of a priming device comprising an auxiliary fuel reservoir containing fuel, a mixture passage having one end connected to the connection between the manifold and vacuum feed reservoir and its other end provided with an air inlet and fuel jet receiving fuel from the reservoir, and regulable means for closing off the mixture passage below the jet.

11. The combination with an internal combustion engine, intake manifold connected to a vacuum feed reservoir, carbureter and throttle, of a priming device comprising an auxiliary fuel reservoir containing fuel, a mixture passage having one end connected to the connection between the manifold and vacuum feed reservoir, and the other end provided with an air inlet and a fuel jet receiving fuel from the reservoir, and a manually operated needle valve for closing off the mixture passage below the jet.

12. The combination with an internal combustion engine, intake manifold connected to a vacuum feed reservoir, carbureter and throttle, of a priming device comprising an auxiliary fuel reservoir, an integral mixture passage open at the top and connected at the bottom to the connection between the manifold and vacuum feed reservoir, an air inlet entering the mixture passage near the top, and a fuel conduit leading from the bottom of the fuel reservoir to a point near the top of the mixture passage.

13. The combination with an internal combustion engine, intake manifold connected to a vacuum feed reservoir, carbureter and throttle, of a priming device comprising an auxiliary fuel reservoir, an integral mixture passage with its upper end open and threaded and adapted to receive a regulating valve and having its lower end connected to the connection between the manifold and vacuum feed reservoir, an integral fuel conduit leading from the bottom of the fuel reservoir to a point near the top of the mixture passage, an air inlet leading into the mixture passage near the top, and a regulating valve screwed into the top of the mixture passage and adapted to open or close the same below the jet and air inlet.

14. The combination with an internal combustion engine, intake manifold connected to a vacuum feed reservoir, carbureter and throttle, of a priming device comprising a fuel reservoir with its wall thickened at one side and provided with two parallel passages formed therein, one of relatively large size open at the top and connected at the bottom to the connection between the manifold and vacuum feed reservoir, and the other smaller and extending from the top of the casting to a point near the bottom, with its upper end plugged and having an opening leading

from its lower end to the bottom of the fuel reservoir and another opening leading from a point near its upper end below the plug to a point near the upper end of the larger passage.

15. The combination with an internal combustion engine, intake manifold connected to a vacuum feed reservoir, carbureter and throttle, of a priming device comprising a fuel reservoir with its wall thickened at one side and provided with two parallel passages formed therein, one of relatively large size open at the top and connected at the bottom to the connection between the manifold and vacuum feed reservoir, and the other smaller and extending from the top of the casting to a point near the bottom, with its upper end plugged and having an opening leading from its lower end to the bottom of the fuel reservoir and another opening leading from a point near its upper end below the plug to a point near the upper end of the larger passage, the larger passage having a lateral opening from a point near its upper end to the air.

In witness whereof we have hereunto set our hands and seals this 16th day of October, 1920.

EDWARD C. McKENZIE-MARTYN. [L. S.]
FRANK A. HOWARD. [L. S.]