Jan. 14, 1964 W. J. CUSHING 3,117,481

PLAYER PIANO SYSTEM WITH REPLAY AND CUT-OFF FEATURES

Filed Oct. 5, 1959 5 Sheets-Sheet 1

Fig. 1

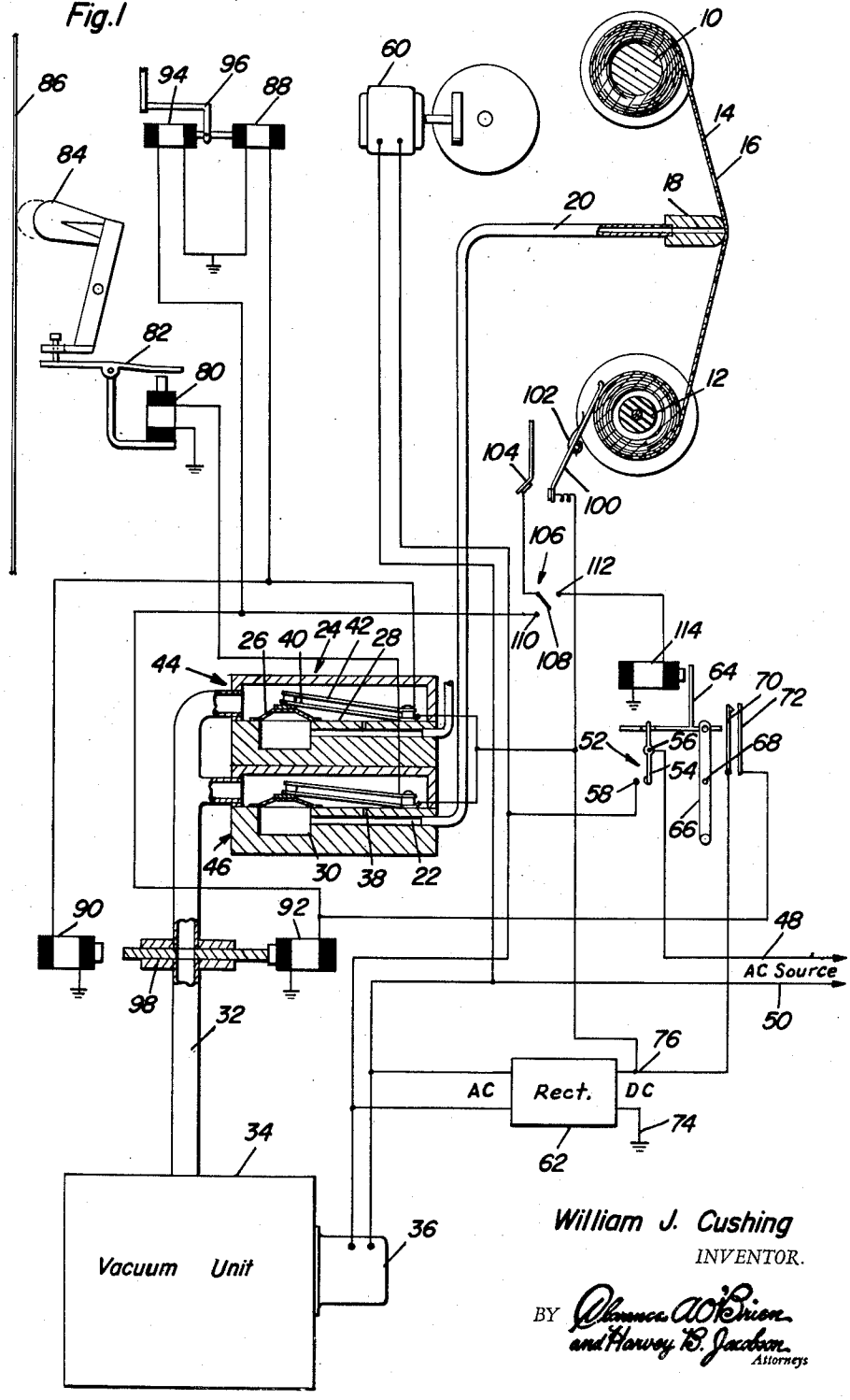

William J. Cushing
INVENTOR.

BY Clarence A. O'Brien and Harvey B. Jacobson
Attorneys

Jan. 14, 1964 W. J. CUSHING 3,117,481

PLAYER PIANO SYSTEM WITH REPLAY AND CUT-OFF FEATURES

Filed Oct. 5, 1959 5 Sheets-Sheet 2

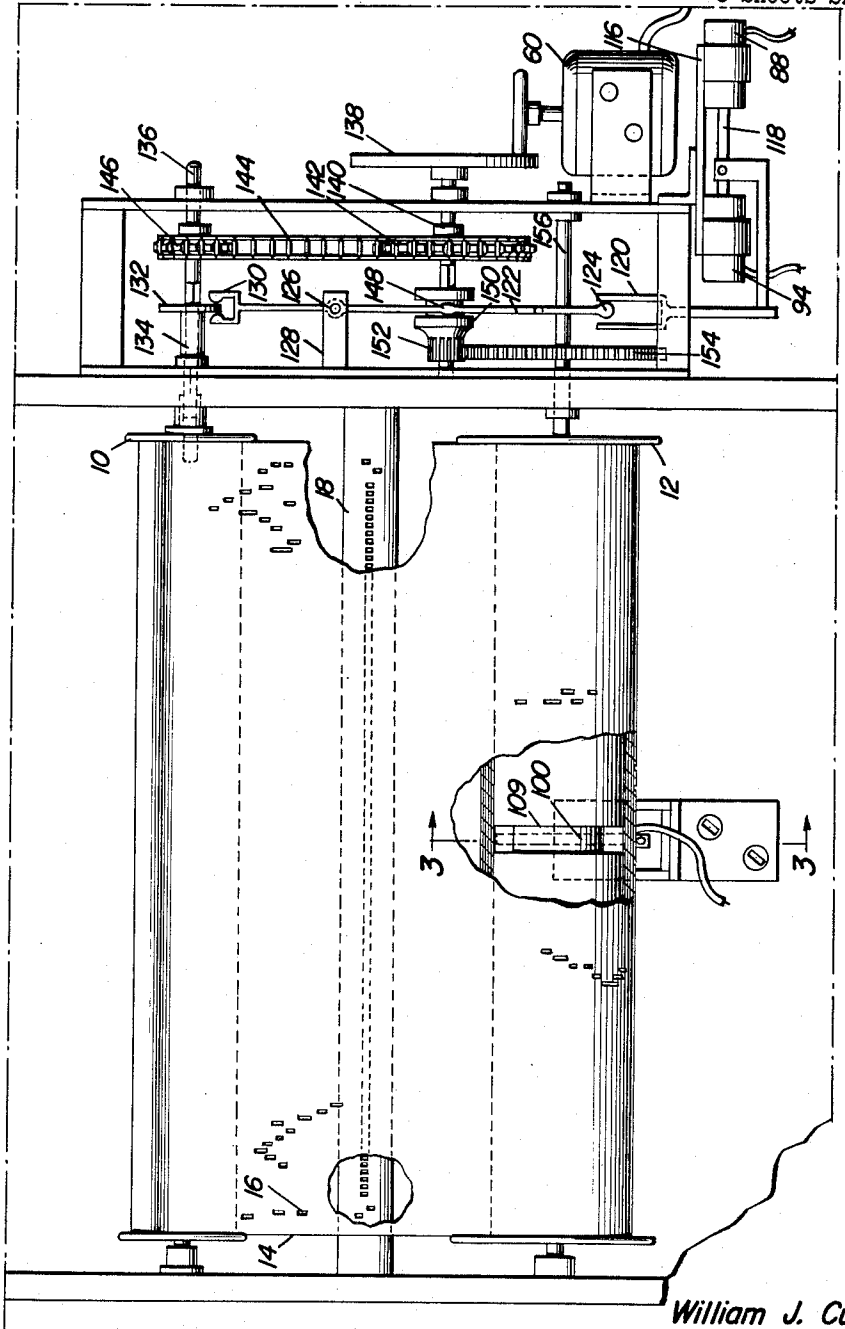

Fig. 2

William J. Cushing
INVENTOR.

BY Clarence O'Brien and Harvey B. Jacobson
Attorneys

Jan. 14, 1964 W. J. CUSHING 3,117,481

PLAYER PIANO SYSTEM WITH REPLAY AND CUT-OFF FEATURES

Filed Oct. 5, 1959 5 Sheets-Sheet 3

Fig.3

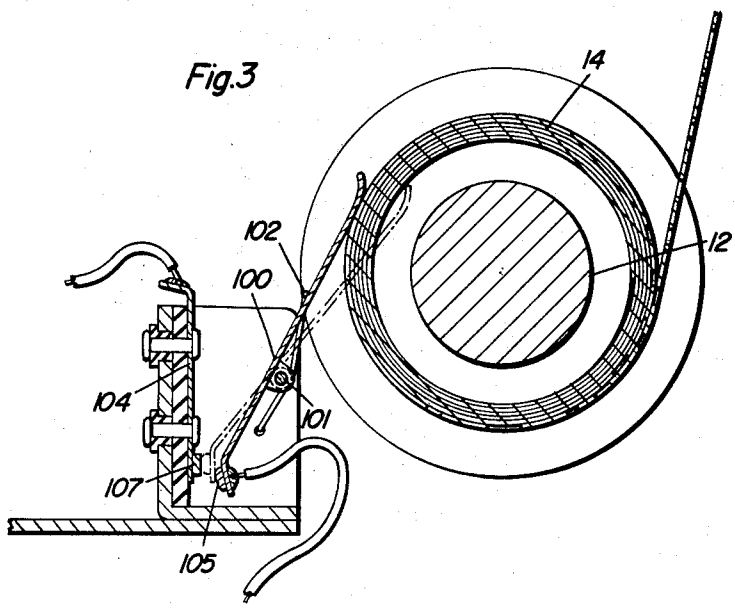

Fig.4

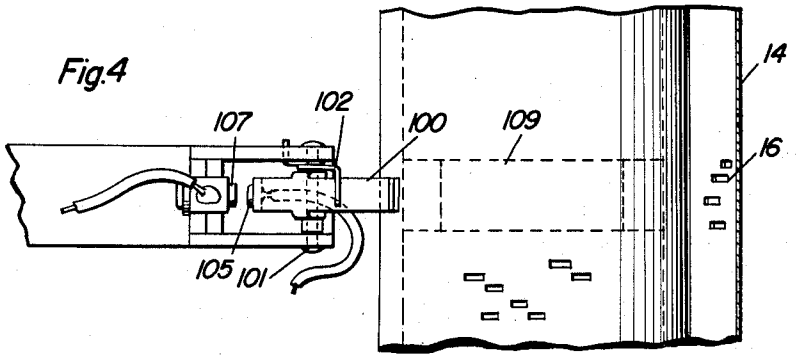

Fig.9

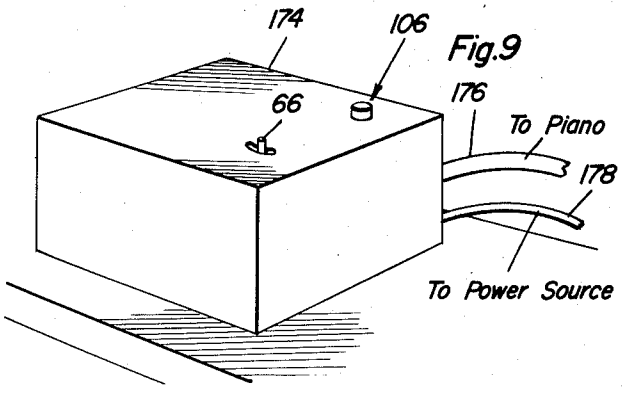

William J. Cushing
INVENTOR.

BY Clarence A. O'Brien and Harvey B. Jacobson
Attorneys

Jan. 14, 1964 W. J. CUSHING 3,117,481

PLAYER PIANO SYSTEM WITH REPLAY AND CUT-OFF FEATURES

Filed Oct. 5, 1959 5 Sheets-Sheet 4

Fig.5

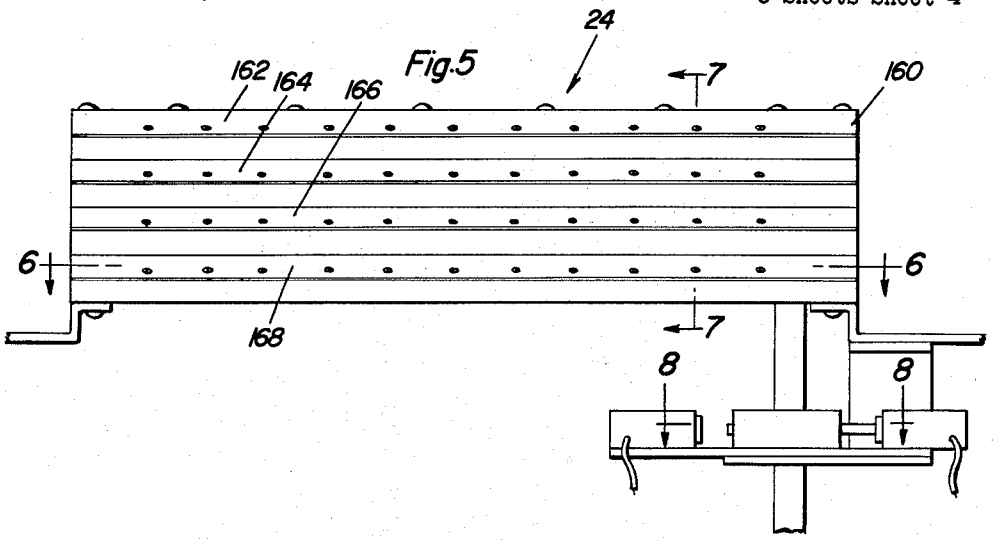

Fig.6

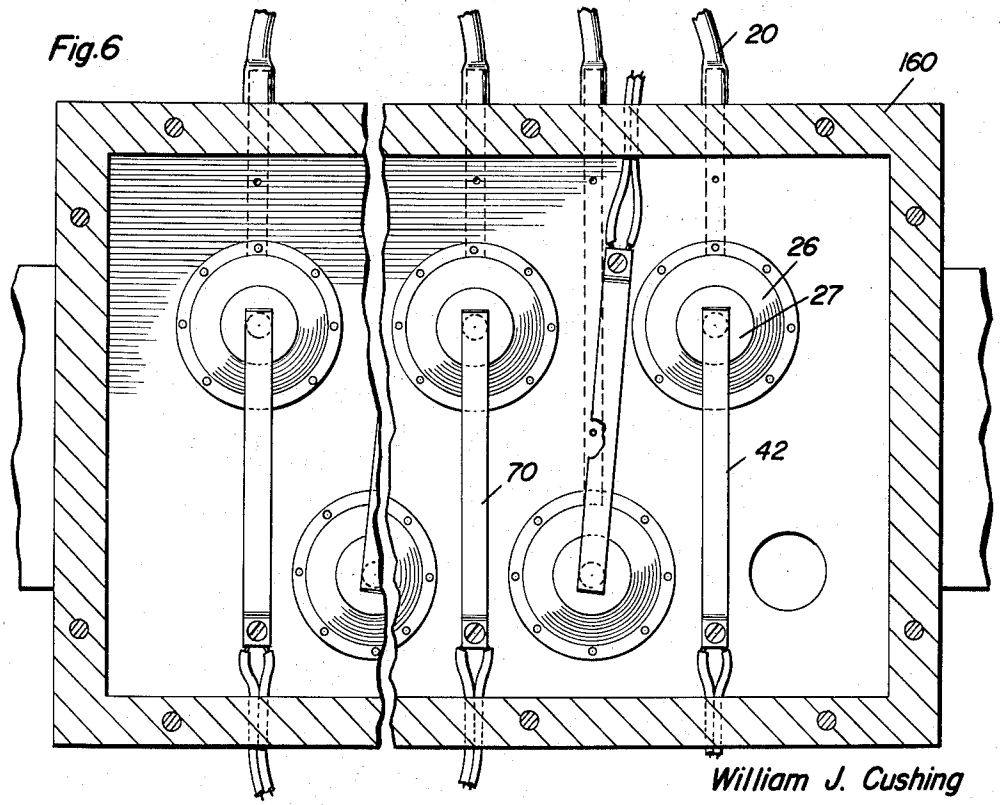

William J. Cushing
INVENTOR.

BY Clarence A. O'Brien and Harvey B. Jacobson
Attorneys

Jan. 14, 1964 W. J. CUSHING 3,117,481

PLAYER PIANO SYSTEM WITH REPLAY AND CUT-OFF FEATURES

Filed Oct. 5, 1959 5 Sheets-Sheet 5

Fig.7

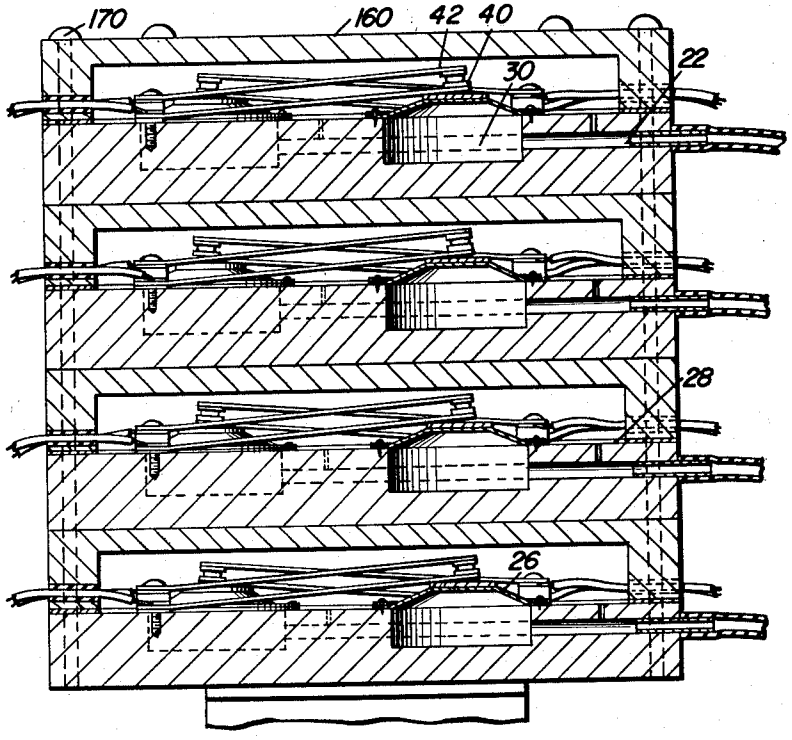

Fig.8

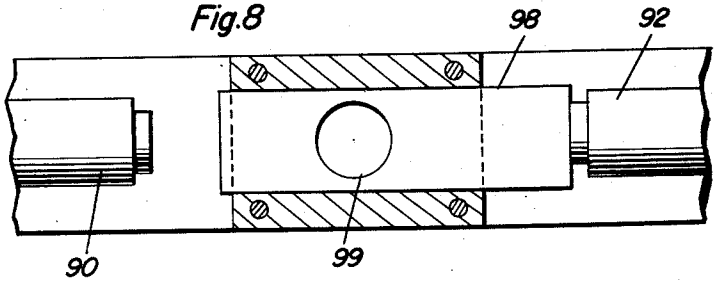

William J. Cushing
INVENTOR.

BY Clarence A. O'Brien and Harvey B. Jacobson
Attorneys

United States Patent Office 3,117,481 Patented Jan. 14, 1964

3,117,481

PLAYER PIANO SYSTEM WITH REPLAY AND CUT-OFF FEATURES

William J. Cushing, Lonoke, Ark.
(905 Military, Benton, Ark.)

Filed Oct. 5, 1959, Ser. No. 844,485
17 Claims. (Cl. 84—19)

This invention relates generally to an automatic player piano system or such and more particularly to novel means for automatically detecting or reading perforated rolls and controlling thereby a piano, typewriter, or any such slave device.

Prior art player piano systems make use of a vacuum to maintain a diaphragm in a collapsed position and utilize the perforations in the player piano roll to vent a tube to increase the pressure adjacent one side of the diaphragm to inflate the diaphragm for control of the piano strings or such. Many variations of this broad idea are disclosed by the prior art. However, each of the various systems known to the applicant has certain inherent disadvantages which it is the object of this invention to overcome.

Accordingly, it is the principal object of this invention to provide a novel and improved player system wherein electrical means are utilized to operate various electromagnets for striking the desired strings and for controlling the vacuum unit, drive unit, and cut-off mechanism. The system has incorporated therein means for forwardly driving a perforated roll with means for detecting or reading the roll to strike the proper string or key. An alternating current source is utilized to operate the drive motor through a transmission to the feed and take-up rollers. The alternating current source likewise operates a vacuum unit and feeds a rectifier for delivering direct current. When the operating switches are initially actuated, the drive motor commences operation and the valve controlling the vacuum unit is opened to evacuate air from above and below a plurality of pouches provided in a converter stack. Each of the pouches is or may be expanded according to the perforated code; that is, the tubes communicating with one side of the pouches bear against the perforated roll and are vented through the perforations according to the code on the roll. A normally open switch is positioned adjacent each pouch and is adapted to be closed by the pouch expansion so as to strike the proper string or key. Means are provided for reversing the drive of the rollers when the perforated roll is completed and thereafter, the system will either commence operation again or open a toggle switch disconnecting the alternating current source from all of the system elements.

It is a further object of this invention to provide a novel and improved piano player system which is relatively simple in construction and operation and which may be manufactured inexpensively.

Inasmuch as the system utilizes electric wires for controlling electromagnets and hammers within the piano or typewriter or such, the player mechanism may be completely enclosed in a remote unit. It will be appreciated that the drive motor and rollers, the vacuum unit and converter stack, and all the accompanying mechanism may be fully enclosed in a housing which may be positioned any desired distance away from the slave machine, as a piano or typewriter. For example, when the system hereafter disclosed is utilized with a conventional piano, eighty-four electromagnets may be utilized for operating eighty-four notes of the piano. Three electromagnets may be utilized to operate the loud pedal, soft pedal, and the mandolin attachment while one electromagnet may be utilized to detect the end of the perforated roll in order to reverse the drive on the rollers and close the vacuum

unit value to prevent the piano from being played while the roll is rewinding. It will be apparent, therefore, that eighty-eight wires will be extended from the remote unit to the piano. Only eighty-eight wires are required inasmuch as all of the electromagnets will be grounded and only one wire will extend to each. Inasmuch as the wires extending to the electromagnets may be externally small (24 gauge), they may be easily accommodated in a single cable. It is contemplated that this invention may be applied in two ways to pianos which in themselves do not form part of the invention and hence are not illustrated. One method is to position the electromagnet and hammers adjacent the strings for direct impingement thereon and alternatively the hammers may be so arranged as to operate the piano keys.

These together with other objects and advantages which will become subsequently apparent reside in the deails of construction and operation as more fully hereinafter described and claimed, reference being had to the accompanying drawings forming a part hereof, wherein like numerals refer to like parts throughout, and in which:

FIGURE 1 is a schematic view of the circuitry and elements utilized in the player system wherein structural illustrations are meant to be representative only;

FIGURE 2 is an elevational front view partially broken away illustrating the transmission means which connect the drive means with the rollers, also illustrated;

FIGURE 3 is an enlarged sectional view taken substantially along the plane 3—3 of FIGURE 2;

FIGURE 4 is an enlarged fragmentary elevational top view illustrating the perforated roll on the take-up roller and shows the normally open switch utilized in conjunction therewith for closing the circuit to either restart the cycle or cut-off the entire mechanism;

FIGURE 5 is a front elevational view of the converter stack enclosing the plurality of tiers having the plurality of pouches in each;

FIGURE 6 is an enlarged sectional view, partially broken away, taken substantially along the plane 6—6 of FIGURE 5;

FIGURE 7 is an enlarged sectional view taken substantially along the plane 7—7 of FIGURE 5;

FIGURE 8 is an enlarged fragmentary sectional view taken substantially along the plane 8—8 of FIGURE 5; and

FIGURE 9 is a perspective view of the remote unit which may be utilized to control the operation of the piano, typewriter, or any slave machine as such.

With continuing reference to the drawings, and initial reference to the representative schematic view of FIGURE 1, it will be noted that a feed roller 10 is provided and in alignment with a take-up roller 12. The structural details of the particular elements will be considered more in detail hereafter and the initial recitation herein will principally refer the reader to the system and operation of the device so as to familiarize him with the components thereof. Supported between the feed roller 10 and take-up roller 12 is the rolled sheet or web 14 having coded perforations 16. When the device is running forwardly, it is contemplated that the roll 14 moves downwardly, as viewed in FIGURE 1, so as to run from the feed roller 10 to the take-up roller 12.

In order to read or detect the perforations 16, a plurality of vertically aligned tube heads 18, communicating with tubes 20 bear against the perforated roll sheet 14 as indicated. The tubes 20 extend to passageways 22 formed in the converter stack generally designated as 24. Flexible pouches or expansible circuit closing devices 26 are fastened on the surface 28 above a pouch seat so as to form a chamber 30 communicating with the passageway 22. A pipe 32 extends from a signal generating vacuum unit 34 driven by motor 36 to the converter

stack 24. The pipe 32 evacuates air from above the surface 28 while a bleed hole 38 equalizes the vacuum above and below the pouch 26 to thereby produce a delayed reduction in pressure in the chamber 30 after it is pressurized by supply of air thereto. With the pressure above and below the pouch 26 equalized, the pouch is collapsed so that when the tube associated with the particular pouch is vented as it becomes aligned with a perforation in the roll 14, the pressure beneath the pouch 26 is increased so as to inflate the pouch. A movable blade 40 of a switch rests on top of the pouch 26 and when the pouch expands, the movable blade 40 contacts a fixed blade 42 to close the normally open switch. In FIGURE 1 the top pouch structure is designated as rewind control unit 44 while the bottom is designated as 46.

Initially, an alternating current source is provided having a pair of leads 48 and 50. The lead 48 extends through a toggle motor control switch 52 having a movable element 54 pivoted at 56 and a fixed element 58 adapted to be contacted thereby. The alternating current conductor 50 extends to one side of the vacuum unit driving motor 36, to one side of the roller drive motor 60, and to one side of the rectifier 62. The other terminal on each of the vacuum unit drive motor 36, the roller drive motor 60 and the rectifier 62, are connected to the fixed element 58 of toggle switch 52. The toggle switch 52 extends through an opening in T-shaped bar 64 which has a handle 66 pivotally connected thereto. Handle 66 in turn is pivotally connected to a fixed point at 68. It is to be noted that when the handle 66 is pivoted clockwise, looking at FIGURE 1, the toggle switch 52 is closed and the leaf spring 70 is brought into temporary electrical contact with a fixed vacuum control contact 72. It is to be noted that the leaf spring 70 is of sufficient strength to then slightly force the T-shaped bar rearwardly so as to open the connection between movable and fixed terminals 70 and 72. However, the toggle switch 52 will remain closed. One of the terminals of the rectifier is designated as 74 and is grounded while the second is designated as 76 has a positive direct voltage associated therewith. The movable contact 40 within the converter stack 24 is directly connected to the terminal 76 of the rectifier and accordingly impresses the positive polarity on the fixed blade 42 when the pouch 26 becomes expanded. For example, when the play control pouch mechanism 46, the lower of the two in FIGURE 1, becomes expanded, as illustrated, the D.C. voltage at terminal 76 is impressed on electromagnet operator 80 which may draw the pivotally mounted armature 82 in a clockwise direction so as to bounce the hammer 84 against the piano string 86. Depending upon which chamber is vented at a particular moment, a particular hammer 84 will be motivated so as to bounce against a particular string 86. Accordingly, it will be appreciated that when a particular tube of a plurality of tubes is vented, a particular string is contacted so as to ring a particular note.

The fixed blade 42 of the upper rewind control pouch mechanism 44, is connected to a reverse or rewind control electromagnet 88. Also, the fixed blade 42 of the upper pouch mechanism 44 is connected to a closure valve electromagnet 90 for vacuum control valve member 98.

The fixed vacuum control contact 72 is electrically connected to an opening electromagnetic valve operator 92 for the vacuum control 98. A forward motivating control electromagnet 94 is also connected to the fixed contact 72 in parallel with the opening electromagnetic valve member 92. Shown only fragmentarily in FIGURE 1 is a portion of the transmission between the drive motor 60 and the rollers 10 and 12, designated as 96 and being operatively moved by the eletromagnets 88 and 94. Likewise, the valve member 98 is positioned between the electromagnets 90 and 92 and is adapted to be moved reciprocally thereby.

The take-up roller 12 is provided with a slot therein into which the pivotally mounted and spring urged take-up exhaust sensing arm 100 may drop when there is no longer any portion of the roll 14 left on the roller 12. The spring 102 urges the pivotally mounted arm 100 against the roll sheet surface 14 on the roller 12. When there is no portion of the roll sheet left on the roller 12, the pivotally mounted arm 100 is urged into the slot 109 in the roller 12 so that the arm 100, connected to the terminal 76 of the rectifier, contacts the fixed terminal 104 connected to the single pole double throw replay control switch 106. The single pole 108 of switch 106 is adapted to be electrically connected in a first position to the replay terminal 110 and in a second position to the cut-off terminal 112. It is to be noted that the terminal 110 is in turn connected to the electromagnets 92 and 94 while the terminal 112 is connected to a cut-off electromagnet 114 which is positioned proximate the T-bar 62 to control reciprocal movement thereof.

Before going into the structural details forming a portion of the invention, the operation of the circuit will be set forth. Initially, in order to commence operation, the handle 66 is pivoted clockwise about the pivot point 68 so as to close the toggle switch 52 and to momentarily connect the contacts 70 and 72. This action will cause the drive motor 60 to start which in turn drives the take-up roller 12 to draw the roll 14 past the tubes 20 comprising a tracker bar. Also, the vacuum unit drive motor 36 starts and since the pipe 32 is open inasmuch as the valve 98 is in the position illustrated because electromagnet 92 has been momentarily actuated, the converter stack will become evacuated above and below each of the pouches 26. A positive potential D.C. voltage will be applied to the movable contacts 40. As the roll 14 passes by the tracker bar composed of a plurality of tubes 20, selected pouches of pouch units 46 will be expanded so as to close normally open switches associated therewith to bounce the hammers 84 against certain strings 86. When the roll sheet 14 is completed, a particular perforation thereon will expand the pouch 26 of the pouch mechanism 44 so as to energize the electromagnets 88 and 90. This action will reverse the drive of the rollers 10 and 12 so as to cause the roll 14 to move upwardly, viewing it as illustrated in FIGURE 1. In order to prevent music from being played while the roll is moving in reverse, electromagnet 90 closes the valve 98 to prevent the vacuum from being established adjacent the pouches. When the roll sheet is entirely removed from the take-up roller 12, the pivotally mounted arm 100 falls into the slot in take-up roller 12 so as to apply the positive D.C. voltage to contact 104. Then, if the pole 108 is in position so as to be connected to the terminal 110, the forward electromagnet 94 will be energized and the open electromagnet 92 will be energized. The roll sheet 14 will then again proceed from the feed roller 10 to the take-up roller 12 and the musical selection will be played as before. If however, the pole 108 is in a position to contact the terminal 112 in lieu of the terminal 110, the electromagnet 114 will be energized so as to attract the T-bar 64 to open the toggle switch 52 to de-energize the motors 36, 60, and disconnect the power source from rectifier 62. It is thought that the broad idea of the invention will now be well understood and the reader's attention is now more particularly drawn to the details of the invention.

With continuing reference to FIGURES 2, 3 and 4, numerals 94 and 88 again represent the forward and reverse electromagnets respectively which are secured to a frame 116. An armature 118 is positioned between electromagnets 94 and 88 for reciprocal movement and has secured thereto a fork member 120. A rod 122 has a protuberance 124 on the end positioned between the bifurcations on the fork member 120. The rod 122 is piv-

oted at 126 to a projection 128 and terminates in a fork member 130. The fork member 130 encloses therein a flange 132 secured to a spindle 134 having a key thereon adapted to engage the shaft 136 to the feed roller 10. The drive motor 60 is frictionally engaged with a drive wheel 138 which drives the shaft 140 having sprocket gear 142 thereof engage with the chain 144 which in turn is engaged with a sprocket gear 146 on shaft 136. The rod 122 further has a protuberance 148 extending through a bifurcated member 150 secured to the shaft 140. A slidable gear thereon is designated as 152 and is adapted to be engaged with the gear 154 secured to the shaft 156 which in turn is fixed to the take-up roller 12. The drive mechanism and transmission means connecting the drive motor 60 to the rollers 10 and 12 should now be understood. With the elements arranged as indicated in FIGURE 2, it is apparent that the electromagnet 94 has been most recently energized inasmuch as the armature 118 is offcenter to the left. The fork 120 therefore pivots the rod 122 at the point 126 as as to engage the gear 152 with the gear 154 and carries the fork portion 130 against the flange 132 to draw the spindle 134 out of engagement with the feed roller 10. Apparently, the drive motor 60 will in this position, turn the shaft 156 to drive the take-up roller 12 past the tracker bar 18 including the plurality of separate tubes 20, and carry the roll sheet 14 forwardly so as to properly decode the coded perforations thereon. When the electromagnet 88 becomes energized, the armature 118 is drawn to the right and the fork member 120 causes the gears 152 and 154 to become disengaged while it carries the portion 130 against the flange 132 to key the spindle 134 with the feed roller 10. Then, the fed roller 10 is driven to carry the roll sheet 14 in reverse. It will be recalled, that when the electromagnet 94 is energized, the vacuum unit is communicating with the various pouches. However, when the electromagnet 88 is energized, the valve 98 seals the vacuum unit 34 from the converter stack 24.

The pivotally mounted arm 100 is pivoted at point 101 and spring 102 carries it against the surface of roll sheet 14 on take-up roller 12. The pivotal arm 100 has a conductive contact portion 105 which is adapted to contact the electrically conductive portion 107 on fixed contacts 104 when the pivotal arm 100 assumes the dotted line position in FIGURE 3, as when it falls into the defined slot 109 in the take-up roller 12 when the roll sheet 14 is completely removed from the take-up roller 12.

Attention is now drawn to FIGURES 5 through 7 wherein the converter stack is illustrated. The converter stack generally designated as 24 includes a housing 160 including various tiers as 162, 164, 166 and 168. Inasmuch as it is contemplated having eighty-eight openings in the tracker bar 18 for the eighty-four notes, the soft pedal, loud pedal, and mandolin attachment, and for the reversal of the drive, it will be seen therefore that each tier must accommodate twenty-two pouches and tubes. In FIGURES 6 and 7 it will be seen that each tier includes a top surface 28 having twenty-two pouch seats therein defining chambers 30 beneath the pouches 26. The passageways 22 extend through the housing 160 to the chambers 30. It will be seen that above each pouch 26 is a pair of contacts 40 and 42 with the lower contact 40 being movable; that is, when the pouch 26 expands, the lower movable contact 40 is carried into engagement with the upper contact 42. The converter stack housing portions, 162, 164, 166 and 168 are secured together by long bolts as 170. Each of the housing sections is of course vacuum type and defines twenty-two outlets, eleven on each side thereof. It is contemplated that the area above the pouches be under fifteen inches of vacuum while playing. It is further intended that the pouches be approximately one and one-half inches in diameter and made of imported pouch leather with an asbestos disk as 27 preferably being cemented to the center thereof. The bleed hole 38 allows the vacuum to be equal on both sides of the pouch. When a hole in the tracker bar 18 is communicated with the chamber 30 through the tube 20, the pouch is caused to expand, as is illustrated in FIGURE 7, so as to cause the contacts 40 and 42 to connect. Of course, when the tube 20 is no longer vented, the vacuum is restored above and below the pouch and the pouch drops back into a collapsed position. The hammers are carried on the piano hammer rail which is movable toward and away from the strings. Associated with the soft pedal opening is a magnet operated thereby which in turn controls the movement of the hammer rail to shorten or lengthen the distance of hammer travel.

FIGURE 8 illustrates the electromagnets 90 and 92 with the valve member 98 reciprocably mounted therebetween and controlled by the energization of the respective magnets. It will be appreciated that when the electromagnet 92 becomes energized, the magnetic member 98 is drawn toward it so as to align the opening 99 in the valve 98 so as to open the pipe 32. Conversely, when the electromagnet 90 is energized, the magnetic valve member 98 is drawn toward the electromagnet 90 so as to misalign the opening 99 with the pipe 32 to seal the vacuum unit 34 from the coverter stack 24.

Referring to FIGURE 9, the entire mechanism exclusive of the hammers 84 and electromagnets 80 associated therewith which must be positioned at the piano, the elements may all be housed within a casing 174. The pivotally mounted projection illustrated therein represents the handle 66 while the push button 106 is the equivalent of the single pole double throw switch particularly illustrated and explained in FIGURE 1. The cable 176 extending to the piano must house eighty-eight wires plus a ground return wire for proper operation. The wire 178 is merely a conventional electric outlet cord.

The entire operation and structural features of the device should now be appreciated. It will be well realized that a remote unit for player pianos or such has been described where vacuum and electrical means are incorporated for inexpensively and efficiently controlling the player action.

The foregoing is considered as illustrative only of the principles of the invention. Further, since numerous modifications and changes will readily occur to those skilled in the art, it is not desired to limit the invention to the exact construction and operation shown and described, and accordingly all suitable modifications and equivalents may be resorted to, falling within the scope of the invention as claimed.

What is claimed as new is as follows:

1. In an automatic player system for pianos or the like having electromagnetically actuated hammer means, a remote control unit comprising a player roll sheet having perforations thereon, means for detecting and indicating said perforations, said means including a vacuum system having a plurality of pouches with an evacuated volume on either side thereof, a tube associated with each pouch extending between one side of said pouch and said perforated roll sheet for atmospheric venting said one side of said pouch to expand said pouch in response to increase in pressure therein, a first normally open switch positioned proximate each of said pouches whereby said pouch expansion will close said normally open switch, electric cable means extending between the remote control unit and the hammer means and operative to connect a source of electrical energy to the hammer means in response to closing of said normally open switch.

2. The combination of claim 1 wherein said perforated roll sheet extends between a feed roller and take-up roller, drive means operatively connected to said source of energy for driving said rollers, transmission means interposed between said drive means and said rollers for driving a selective roller to determine the forward or reverse movement of said perforated roll sheet.

3. An automatic player system for pianos or the like comprising in combination with a player roll sheet hav-

ing perforations thereon, means for detecting and indicating said perforations, said means including a vacuum system having a plurality of pouches with an evacuated volume on either side thereof, a tube associated with each pouch extending between one side of said pouch and said perforated roll sheet for atmospheric venting said one side of said pouch to expand said pouch in response to increase in pressure therein, a first normally open switch positioned proximate each of said pouches whereby said pouch expansion will close said normally open switch, a source of electrical energy, a hammer electromagnet, said normally open switch connecting said source to said hammer electromagnet, said perforated roll sheet extending between a feed roller and take-up roller, drive means for driving said rollers, transmission means interposed between said drive means and said rollers, for driving a selective roller to determine the forward or reverse movement of said perforated roll sheet, said transmission means including a reverse movement electromagnet and a forward movement electromagnet, a push button type switch connecting said forward electromagnet to said source.

4. An automatic player system for pianos or the like comprising in combination with a player roll sheet having perforations thereon, means for detecting and indicating said perforations, said means including a vacuum system having a plurality of pouches with an evacuated volume on either side thereof, a tube associated with each pouch extending between one side of said pouch and said perforated roll sheet for atmospheric venting said one side of said pouch to expand said pouch in response to increase in pressure therein, a first normally open switch positioned proximate each of said pouches whereby said pouch expansion will close said normally open switch, a source of electrical energy, a hammer electromagnet, said normally open switch connecting said source to said hammer electromagnet, said perforated roll sheet extending between a feed roller and take-up roller, drive means for driving said rollers, transmission means interposed between said drive means and said rollers for driving a selective roller to determine the forward or reverse movement of said perforated roll sheet, said transmission means including a reverse movement electromagnet and a forward movement electromagnet, a push button type switch connecting said forward electromagnet to said source, a slot in the circumferential surface of said take-up roller, a second normally open switch including a pivotally mounted arm adapted to drop into said slot to close said switch when said roll is not on said take-up roller.

5. An automatic player system for pianos or the like comprising in combination with a player roll sheet having perforations thereon, means for detecting and indicating said perforations, said means including a vacuum system having a plurality of pouches with an evacuated volume on either side thereof, a tube associated with each pouch extending between one side of said pouch and said perforated roll sheet for atmospheric venting said one side of said pouch to expand said pouch in response to increase in pressure therein, a first normally open switch positioned proximate each of said pouches whereby said pouch expansion will close said normally open switch, a source of electrical energy, a hammer electromagnet, said normally open switch connecting said source to said hammer electromagnet, said perforated roll sheet extending between a feed roller and take-up roller, drive means for driving said rollers, transmission means interposed between said drive means and said rollers for driving a selective roller to determine the forward or reverse movement of said perforated roll sheet, said transmission means including a reverse movement electromagnet and a forward movement electromagnet, a push button type switch connecting said forward electromagnet to said source, a slot in the circumferential surface of said take-up roller, a second normally open switch including a pivotally mounted arm adapted to drop into said slot to close said switch when said roll is not on said take-up roller, said second normally open switch serially connected between said source, and a single pole double throw switch having a first position connected to said forward electromagnet and a second position connected to a cut-off magnet.

6. An automatic player system for pianos or the like comprising in combination with a player roll sheet having perforations thereon, means for detecting and indicating said perforations, said means including a vacuum system having a plurality of pouches with an evacuated volume on either side thereof, a tube associated with each pouch extending between one side of said pouch and said perforated roll sheet for atmospheric venting said one side of said pouch to expand said pouch in response to increase in pressure therein, a first normally open switch positioned proximate each of said pouches whereby said pouch expansion will close said normally open switch, a source of electrical energy, a hammer electromagnet, said normally open switch connecting said source to said hammer electromagnet, said perforated roll sheet extending between a feed roller and take-up roller, drive means for driving said rollers, transmission means interposed between said drive means and said rollers for driving a selective roller to determine the forward or reverse movement of said perforated roll sheet, said transmission means including a reverse movement electromagnet and a forward movement electromagnet, a push button type switch connecting said forward electromagnet to said source, a slot in the circumferential is not on said take-up roller, said second normally open switch including a pivotally mounted arm adapted to drop into said slot to close said switch when said roll is not on said take-up roller, said second normally open switch serially connected between said source, and a single pole double throw switch having a first position connected to said forward electromagnet and a second position connected to a cut-off magnet, and electromagnetic valve means associated with said vacuum system, said electromagnetic valve means including a closure electromagnet electrically in parallel with said reverse electromagnet and an opening electromagnet electrically in parallel with said forward electromagnet.

7. In a system for automatically playing piano roll sheets and the like, having perforations thereon, means for detecting said perforations and converting them to electrical signals to remotely control piano action comprising a feed roller and a take-up roller, a drive motor, transmission means coupling said drive motor to said rollers for driving said respective rollers selectively to move said roll sheets in a reverse or forward direction, a plurality of aligned tubes bearing against said roll sheets intermediate said rollers, said tubes extending to separate chambers in a converter stack, a pouch sealing each of said chambers, a vacuum unit operatively connected to said stack for evacuating air from above and below each of said pouches whereby an associated pouch will become expanded when a particular tube is vented through a perforation to atmosphere, a first normally open switch associated with each of said pouches for closure upon pouch expansion and an electromagnet associated with each of said first switches, said transmission means including a forward movement electromagnet and a reverse movement electromagnet, said reverse movement electromagnet being connected to one of said first switches.

8. In a system for automatically playing piano roll sheets and the like having perforations thereon, means for detecting said perforations and converting them to electrical signals to remotely control piano action comprising a feed roller and a take-up roller, a drive motor, transmission means coupling said drive motor to said rollers for driving said respective rollers selectively to move said

roll sheets in a reverse or forward direction, a plurality of aligned tubes bearing against said roll sheets intermediate said rollers, said tubes extending to separate chambers in a converter stack, a pouch sealing each of said chambers, a vacuum unit operatively connected to said stack for evacuating air from above and below each of said pouches whereby an associated pouch will become expanded when a particular tube is vented through a perforation to atmosphere, a first normally open switch associated with each of said pouches for closure upon pouch expansion and an electromagnet associated with each of said first switches, said transmission means including a forward movement electromagnet and a reverse movement electromagnet, said reverse movement electromagnet being connected to one of said first switches, a slot in the circumferential surface of said take-up roller, a second normally open switch including a pivotally mounted arm adapted to drop into said slot to close said switch when said roll is not on said take-up roller.

9. In a system for automatically playing piano roll sheets and the like having perforations thereon, means for detecting said perforations and converting them to electrical signals to remotely control piano action comprising a feed roller and a take-up roller, a drive motor, transmission means coupling said drive motor to said rollers for driving said respective rollers selectively to move said roll sheets in a reverse or forward direction, a plurality of aligned tubes bearing against said roll sheets intermediate said rollers, said tubes extending to separate chambers in a converter stack, a pouch sealing each of said chambers, a vacuum unit operatively connected to said stack for evacuating air from above and below each of said pouches whereby an associated pouch will become expanded when a particular tube is vented through a perforation to atmosphere, a first normally open switch associated with each of said pouches for closure upon pouch expansion and an electromagnet associated with each of said first switches, said transmission means including a forward movement electromagnet and a reverse movement electromagnet, said reverse movement electromagnet being connected to one of said first switches, a slot in the circumferential surface of said take-up roller, a second normally open switch including a pivotally mounted arm adapted to drop into said slot to close said switch when said roll is not on said take-up roller, said second normally open switch serially connected to a single pole double throw switch having a first position connected to said forward electromagnet and a second position connected to a cut-off electromagnet.

10. In a system for automatically playing piano roll sheets and the like having perforations thereon, means for detecting said perforations and converting them to electrical signals to remotely control piano action comprising a feed roller and a take-up roller, a drive motor, transmission means coupling said drive motor to said rollers for driving said respective rollers selectively to move said roll sheets in a reverse or forward direction, a plurality of aligned tubes bearing against said roll sheets intermediate said rollers, said tubes extending to separate chambers in a converter stack, a pouch sealing each of said chambers, a vacuum unit operatively connected to said stack for evacuating air from above and below each of said pouches whereby an associated pouch will become expanded when a particular tube is vented through a perforation to atmosphere, a first normally open switch associated with each of said pouches for closure upon pouch expansion and an electromagnet associated with each of said first switches, said transmission means including a forward movement electromagnet and a reverse movement electromagnet, said reverse movement electromagnet being connected to one of said first switches, a slot in the circumferential surface of said take-up roller, a second normally open switch including a pivotally mounted arm adapted to drop into said slot to close said switch when said roll is not on said take-up roller, said second normally open switch serially connected to a single pole double throw switch having a first position connected to said forward electromagnet and a second position connected to a cut-off electromagnet, an alternating current source of electrical energy, said alternating current source serially connected to a toggle switch which in turn is serially connected to the parallel combination of said drive motor, said vacum unit and a rectifier for offering direct current, said direct current connected to each of said first switches, said cut-off electromagnet positioned adjacent said toggle switch for opening said toggle switch upon action thereof.

11. In a system for automatically playing piano roll sheets and the like, having perforations thereon, means for detecting said perforations and converting them to electrical signals to remotely control piano action comprising a feed roller and a take-up roller, a drive motor, transmission means coupling said drive motor to said rollers for driving said respective rollers selectively to move said roll sheets in a reverse or forward direction, a plurality of aligned tubes bearing against said roll sheets intermediate said rollers, said tubes extending to separate chambers in a converter stack, a pouch sealing each of said chambers, a vacuum unit operatively connected to said stack for evacuating air from above and below each of said pouches whereby an associated pouch will become expanded when a particular tube is vented through a perforation to atmosphere, a first normally open switch associated with each of said pouches for closure upon pouch expansion and an electromagnet associated with each of said first switches, said transmission means including a forward movement electromagnet and a reverse movement electromagnet, said reverse movement electromagnet being connected to one of said first switches, a slot in the circumferential surface of said take-up roller, a second normally open switch including a pivotally mounted arm adapted to drop into said slot to close said switch when said roll is not on said take-up roller, said second normally open switch serially connected to a single pole double throw switch having a first position connected to said forward electromagnet and a second position connected to a cut-off electromagnet, an alternating current source of electrical energy, said alternating current source serially connected to a toggle switch which in turn is serially connected to the parallel combination of said drive motor, said vacuum unit and a rectifier for offering direct current, said direct current connected to each of said first switches, said cut-off electromagnet positioned adjacent said toggle switch for opening said toggle switch upon action thereof, and electromagnetic valve means associated with said vacuum unit, said electromagnetic valve means including a closure electromagnet electrically in parallel with said reverse electromagnet and an opening electromagnet electrically in parallel with said forward electromagnet.

12. In a system for automatically playing a piano or such by utilizing perforated sheet rolls, a portable unit spaced from said piano, means in said unit for driving said perforated sheet roll and detecting the coded perforations thereon, conversion means for producing electrical signals proportional to said detected perforations, and means associated with said piano and responding to said electrical signal to play said piano in accordance with the coded perforations, and means associated with said unit to reverse the movement of said rolls upon completion thereof, and means for selectively repeating the forward movement or for preventing further movement of said roll thereafter.

13. A converter stack comprising a tiered housing, a plurality of pouch seats formed in each of said tiers, a pouch secured over each pouch seat for forming a chamber, a passageway extending from each of said chambers externally of said housing, a bleed hole having a cross-sectional area significantly smaller than said passageway cross-sectional area communicating the volume above said pouch with said chamber.

14. A converter stack comprising a tiered housing, a plurality of pouch seats formed in each of said tiers, a pouch secured over each pouch seat for forming a chamber, a passageway extending from each of said chambers externally of said housing, a bleed hole having a cross-sectional area significantly smaller than said passageway cross-sectional area communicating the volume above said pouch with said chamber, a movable switch contact and a fixed switch contact associated with each of said pouches, said movable contact positioned proximate said pouch whereby upon expansion of said pouch it will be carried in to engagement with said fixed contact.

15. In combination with a piano or the like equipped with a plurality of power actuated hammer devices, a remote control playing unit operatively connected to said power actuated hammer devices comprising, switch chamber means, vacuum generating means operatively connected to said switch chamber means for continuously maintaining vacuum pressure therewithin, expansible circuit closing means mounted within said switch chamber means, coded signal producing means operatively connected to said expansible circuit closing means for establishing atmospheric pressure therewithin to establish a power circuit for one of said plurality of power actuated hammer devices during normal and rewind operation thereof and delayed circuit opening means operative in response to establishment of atmospheric pressure in the expansible circuit closing means for delayed reduction of said atmospheric pressure to said vacuum pressure within said switch chamber means.

16. The combination of claim 15 including rewind vacuum control means operatively connected to said vacuum generating means to prevent maintenance of vacuum pressure within said switch chamber means during rewind operation of the coded signal producing means.

17. The combination of claim 16, including sensing means operatively connected to the signal producing means for detecting a starting condition thereof and replay control means operatively connected to said rewind vacuum control means and responsive to detection of said starting condition of the signal producing means following rewind operation to selectively restore vacuum pressure to the switch chamber means or stop operation of the vacuum generating means.

References Cited in the file of this patent

UNITED STATES PATENTS

589,535	Pain	Sept. 7, 1897
891,938	Larson	Feb. 24, 1906
1,292,321	Hope et al.	Jan. 21, 1919
1,478,456	Rotter	Dec. 25, 1923
2,924,139	Green	Feb. 9, 1960

OTHER REFERENCES

Popular Mechanics, article "Push Button Piano Cabinet Plays Program of Eight Rolls," page 390, September 1924.