June 6, 1950 J. J. GOODRIE 2,510,396

AERATING DEVICE

Filed April 7, 1948

Fig. 1

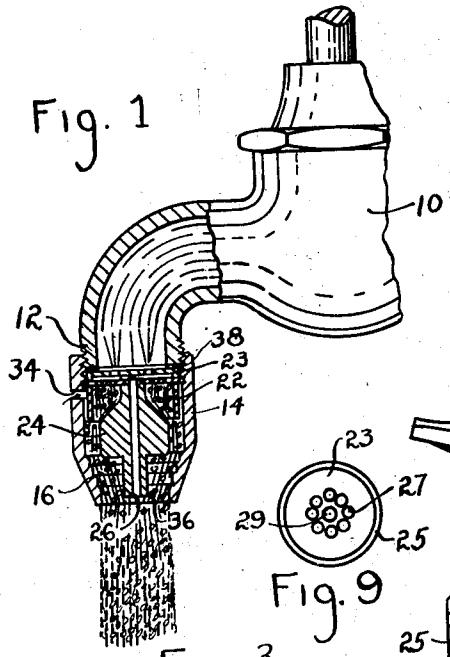

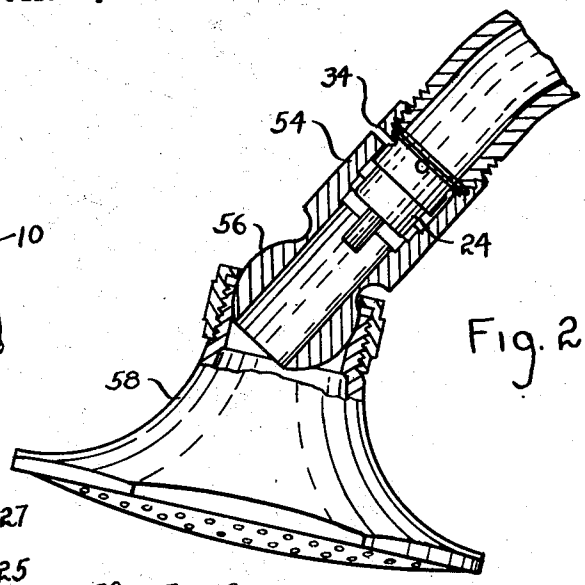

Fig. 2

Fig. 9

Fig. 3

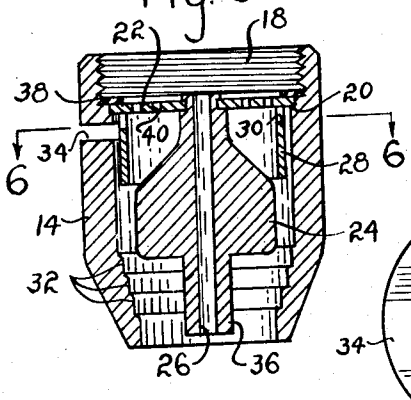

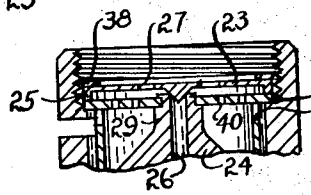

Fig. 8

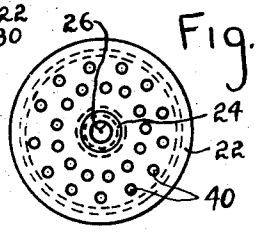

Fig. 4

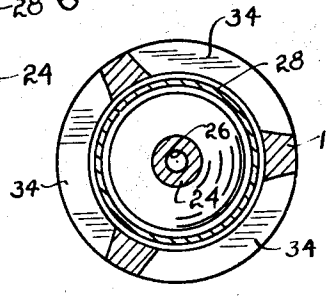

Fig. 6

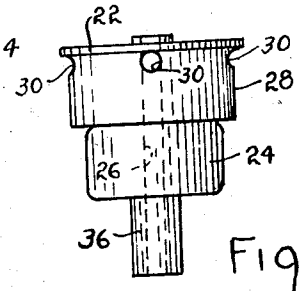

Fig. 5

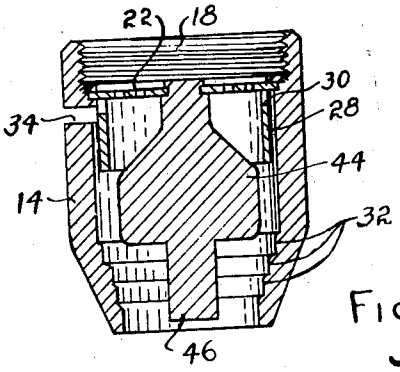

Fig. 7

JOSEPH J. GOODRIE
INVENTOR.

BY Alberto J. Fike
ATTORNEY

Patented June 6, 1950 2,510,396

UNITED STATES PATENT OFFICE

2,510,396

AERATING DEVICE

Joseph J. Goodrie, Chicago, Ill., assignor to Wrightway Engineering Co., Chicago, Ill., a corporation of Illinois

Application April 7, 1948, Serial No. 19,615

5 Claims. (Cl. 261—111)

1

This invention relates to an improved aerating device and the present invention is along the same lines and comprises an improvement over my prior patent entitled "Unitary flush valve connection"; granted October 25, 1938, No. 2,134,182 and which was filed on January 31, 1935.

This invention also comprises an improvement over my co-pending application for patent entitled "Combination vacuum breaking and mixing device" which was filed on November 13, 1947 Serial No. 785,558.

One of the important objects of the present invention is to provide an apparatus for mixing air with water as the water is delivered from a faucet or other source, while at the same time, maintaining a coherent delivered stream of the aerated water.

Another important object of the invention is the provision of an aerating device which can be readily applied to an ordinary water tap, such as a sink faucet, so that the housewife will have aerated water available for her innumerable duties and it has been found that aerated water is much more satisfactory in practically all cases.

A still further object of the invention is to provide a simple, yet efficient, apparatus for aerating water and which will so aerate the water or even other liquids that a coherent stream results containing innumerable small air bubbles whereby a better wetting action and increased oxidizing and saponifying results are achieved.

Another and still further object of the invention is the provision of an attachment for faucets for mixing air with water which is along the same lines as the construction of my prior patent, in that the flowing water is first passed through a perforated disc and then into a restricted passage whereby air is drawn in through ports in the sides of the attachment, after which the air is mixed with the water when the same completes its passage through the device and between the outside walls and an inner conical plug.

Yet another object of the invention is to provide a means for aerating water or other liquids by passing the same through a restricted orifice while at the same time aspirating air thereinto and which device is characterized by the absence of screens.

Other and further important objects of the invention will be apparent from the disclosures in the accompanying drawings and following specification.

The invention, in a preferred form, is illustrated in the drawings and hereinafter more fully described.

2

In the drawings:

Figure 1 is a side elevation, partly in section, illustrating the aerating device of this invention applied to an ordinary water faucet or the like.

Figure 2 shows the invention as used in connection with a shower head.

Figure 3 is an enlarged sectional view showing the interior construction of one embodiment of the invention, particularly adapted for lower water pressures.

Figure 4 is a top plan view of the perforated disc which forms an important part of the apparatus of this invention.

Figure 5 is a side elevation of the removable inner structure of the aerating valve.

Figure 6 is a sectional view taken on the line 6—6 of Figure 3, looking in the direction indicated by the arrows.

Figure 7 is a sectional view similar to that of Figure 3, but illustrating a slight modification of the invention.

Figure 8 is an enlarged sectional view of a portion of Figure 1, showing an important feature.

Figure 9 is an underside plan view of one of the perforated discs which form an essential part of the structure.

As shown in the drawings:

The reference numeral 10 indicates generally a water faucet or the like to which the improved aerating device of this invention is applied. This can be done in any convenient manner such as by external screw-threads 12 at the end of the faucet.

The device itself comprises essentially an outer casing 14 which is preferably cylindrical as shown and which can be slightly tapered at its outer end 16. The upper end is internally screw-threaded as shown at 18 for interfitting with the external screw-threads 12, but other attaching means can obviously be employed.

An annular shoulder 20 is incorporated into the casing 14 and this shoulder is adapted to support a perforated disc 22 which is quite similar to the perforated disc 38 of my prior patent. As best shown in Figure 4 the disc 22 has a series of openings 40 therein which can be varied in size and number to meet practically any condition.

A water flow retarding and air mixing element 24 which is quite similar in shape and function to the plug 31—32—34 of my previous patented valve is fastened to the disc 22 at its center as best shown in Figures 3 and 4 and this element has a central longitudinal opening therethrough as shown at 26 which opening is similar to the opening 40 in my previous patented valve

connection. This mixing element 24 is sometimes designated as a slug and also as an elongated body.

A depending skirt 28 which is also similar to the corresponding skirt in my previous patented construction is fastened to or is integral with the disc 22 and a series of drainage openings 30 is provided around the peripheral junction of the disc and skirt. These also serve as additional air inlets.

As best shown in Figure 8 the perforated disc 22 is, in many cases, surmounted by another perforated disc 23 which is slightly spaced away from the disc 22 either by means of an additional gasket or by an integral annular rim 25. It will be noted that this disc 23 has its openings 27 larger than the openings 40 in the disc 22 and the openings 27 are closer to the center of the disc.

An integral protuberance 29 is incorporated into the disc 23 at the center thereof on its underface and this is so constructed as to block the passageway or opening 26 which is formed through the water retarder 24. This particular construction is employed where the water pressure is fairly high, as it is in most cases, and the water flowing through the apparatus obviously first passes through the openings 27 in the disc 23 and then into the space between the superimposed discs, thence through the openings 40 in the disc 22 which are smaller than the openings 27 but larger in number. At the same time, passage 26 is closed whereby a much better aerating action of the liquid results.

The inner face of the body or casing 14 is gradually restricted in a series of shouldered annular cutaway portions as illustrated at 32 and these annuli are below the maximum dimensions of the flow retarder 24 all as best shown in Figures 1 and 3.

A series of air inlet ports 34 is cut into the upper portion of the cylinder 14 as best shown in Figure 6 whereby sufficient air is admitted to the interior of the device when water or other liquid is flowing therethrough.

The conical-cylindrical element 24 is provided with an extension 36 which is preferably integral therewith and protrudes downwardly from it terminating in a plane just short of the plane of the outer end of the nozzle or valve 14.

A gasket or other sealing element 38 is incorporated at the junction of the disc 22, the shoulder 20 and the outer end of the faucet 10.

The annuli may be varied in number and may also be arranged in differently spaced relationships to the plugs 24 or 44. The shoulders defining the annuli may be square as shown in Figure 2 but are preferably rounded as illustrated in Figures 1, 3 and 7. The passage of the mixed air and water over the annuli produces a thorough incorporation of the air bubbles into the stream of liquid and a solid coherent jet results as it issues from the casing 14. It will be noted that no screens are employed in the device but a most thorough aerating action results.

In the modified form of the invention illustrated in Figure 7 and disc 22, skirt 28, casing 14, ports 34 and annuli 32 remain unchanged but the flow retarder and air mixer and its extension are solid with no central opening therethrough as shown at 44 and 46 respectively. This embodiment is employed in cases where higher pressure is encountered, but where the second perforated disc 23 is dispensed with.

The device can be readily applied to showers

as illustrated in Figure 2 and in this case the construction of either Figure 3 or Figure 7 or a slightly modified form, as shown, can be employed so far as the internal arrangement is concerned. The outer casing 54 is quite similar to the casing 14 except that it incorporates an integral spherical terminal structure 56 which, in conjunction with the upper end of the shower head 58, forms a ball and socket joint whereby the shower stream can be directed as desired. Here again the aerated water produces a much more satisfactory wetting operation and a series of coherent streams or jets which mix very readily with soap or other detergent.

It will be evident that herein is provided an aerating device which will satisfactorily mix desired quantities of air with a flowing liquid regardless of pressure variations and which will produce a coherent stream of such aerated liquid which obviously has many advantages such as non-splashing features, more thorough and complete wetting, adequate saponification and an increased oxidizing effect.

I am aware that many changes may be made and numerous details of construction varied throughout a wide range without departing from the principles of this invention and I, therefore, do not purpose limiting the patent granted hereon otherwise than as necessitated by the prior art.

I claim as my invention:

1. An aerating device for faucets and the like comprising a casing having lateral air inlet ports and provided with a water inlet connection, a disk having circularly disposed openings transversely of the connection for discharging streams of water adjacent the ports, a skirt within the casing spaced from the wall thereof adjacent the ports, an elongated body beneath the disk circular in cross section having a portion upwardly tapered on which the streams impinge and a series of internal shoulders of increasingly reduced diameter in the lower portion of the casing, the body having a reduced extension within the shoulders for producing a coherent stream of water mixed with air bubbles.

2. An aerating device as defined in claim 1 and wherein the body is frusto-conical at its upper portion and the lower extension is cylindrical.

3. An aerator as defined in claim 1 wherein the skirt adjacent the air inlet ports depends from the disk adjacent the water inlet connection.

4. An aerator as described in claim 1 wherein the body and its extension is provided with a passage longitudinally therethrough.

5. An aerator as defined in claim 1 wherein the body is riveted at its upper end to the center of the perforated disk.

JOSEPH J. GOODRIE.

REFERENCES CITED

The following references are of record in the file of this patent:

UNITED STATES PATENTS

Number	Name	Date
1,810,131	Daily	June 16, 1931
1,912,113	Aghnides	May 30, 1933
2,134,182	Goodrie	Oct. 25, 1938
2,210,646	Aghnides	Aug. 6, 1940
2,316,832	Aghnides	Apr. 20, 1943
2,395,621	Funke	Feb. 26, 1946