United States Patent [19]

Brilloit

[11] **3,751,820**

[45] **Aug. 14, 1973**

[54] **CHARGING AND DISCHARGING OF LYOPHILISATION APPARATUS**

[75] Inventor: **Jacques Brilloit**, Grenoble, France

[73] Assignee: **L'Air Liquide, Societe Anonyme Pour L'Etude et L'Exploitation des Procedes Georges Claude**, Paris, France

[22] Filed: **Dec. 14, 1971**

[21] Appl. No.: **207,933**

[30] **Foreign Application Priority Data**

Dec. 16, 1970 France 7045384

[52] **U.S. Cl.** **34/92**, 141/85, 141/286, 259/3

[51] **Int. Cl.** **F26b 13/30**, F26b 5/04

[58] **Field of Search** 34/92; 141/85, 286; 222/367, 170, 167; 259/3, 14, 41

[56] **References Cited**

UNITED STATES PATENTS

2,837,831	6/1958	Gates	34/92
2,392,245	1/1946	Huszar	222/167 X

FOREIGN PATENTS OR APPLICATIONS

214,364	4/1961	Austria	34/92
1,048,830	1/1959	Germany	34/92

Primary Examiner—William F. O'Dea
Assistant Examiner—William C. Anderson
Attorney—Irvin S. Thompson et al.

[57] **ABSTRACT**

This invention relates to apparatus for lyophilising congealed or frozen product particles. Such apparatus usually comprises a box-like sublimation enclosure in which the particles are placed, and having bladed stirring means which are rotatable about an axis, together with heating means and filling and discharging conduits, one end of the discharge conduit being situated in an axial discharge zone and said conduit having an obturating member or shutter. According to this invention, the stirring means operates as a removal device in the lower part of the enclosure and has a flow gutter directed towards the said axial zone in the upper part of the enclosure. Discharge means situated close to the axial zone are also incorporated.

10 Claims, 5 Drawing Figures

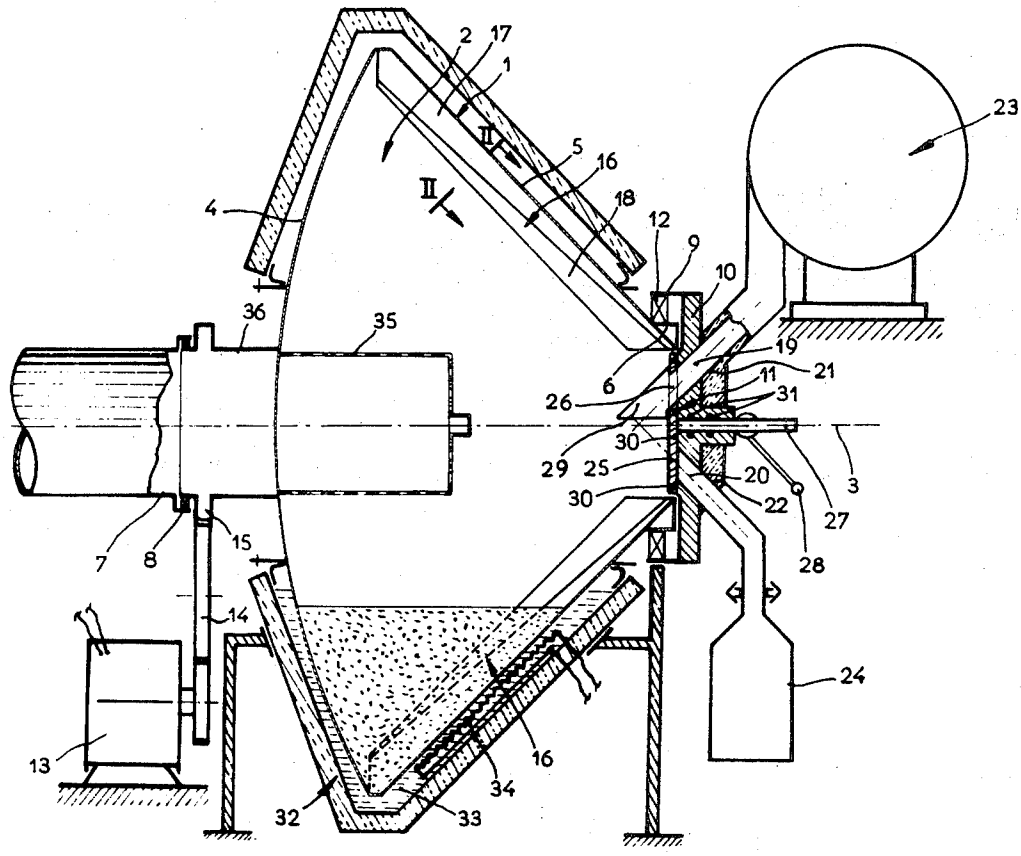

PATENTED AUG 14 1973

3,751,820

SHEET 1 OF 2

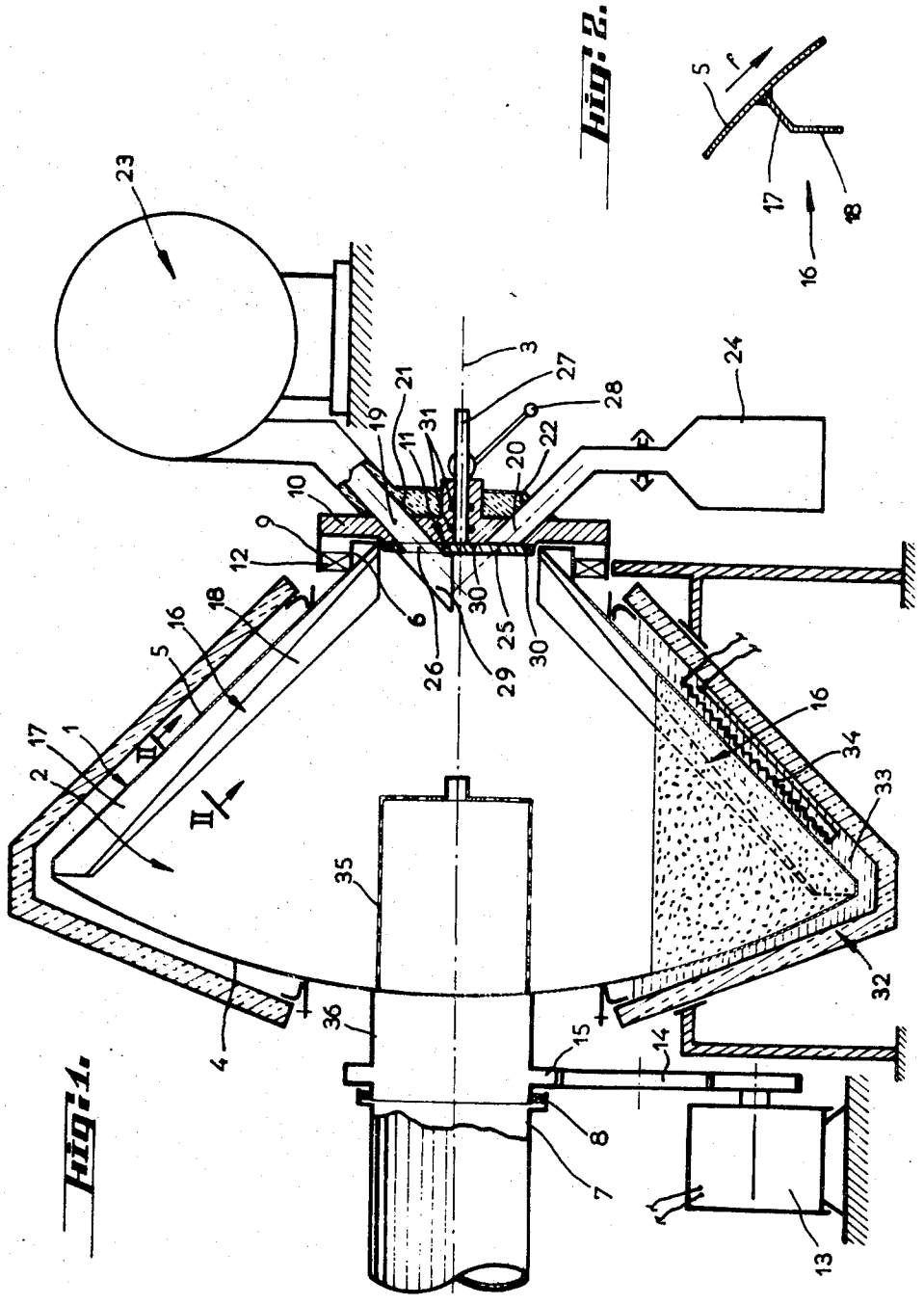

Fig. 1.

Fig. 2.

Fig: 3.

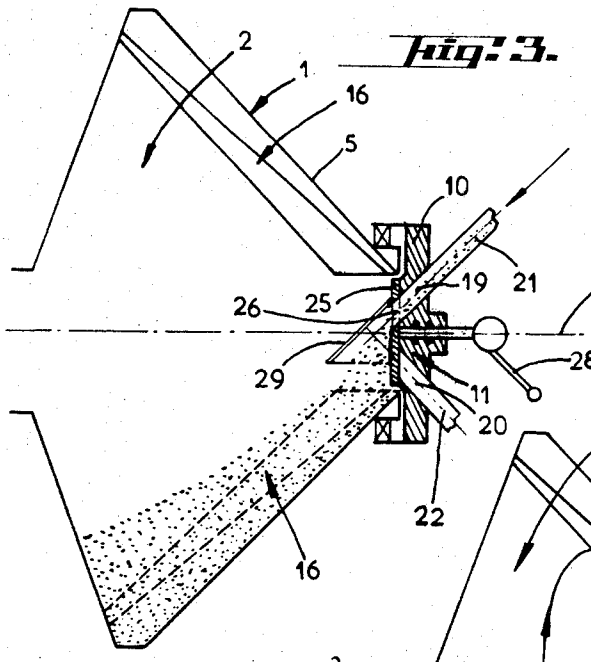

Fig: 4.

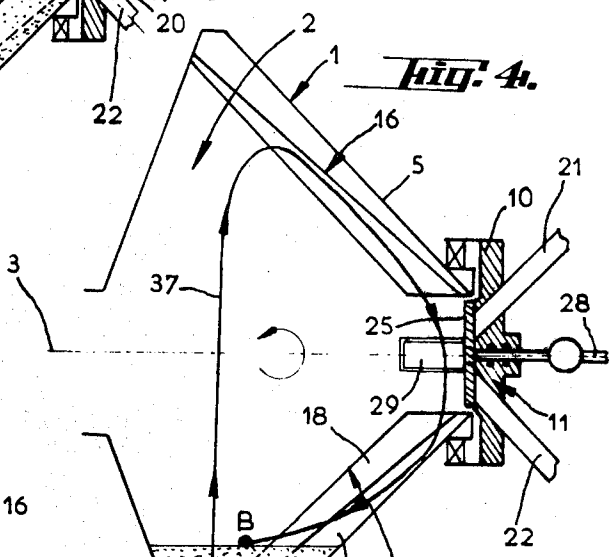

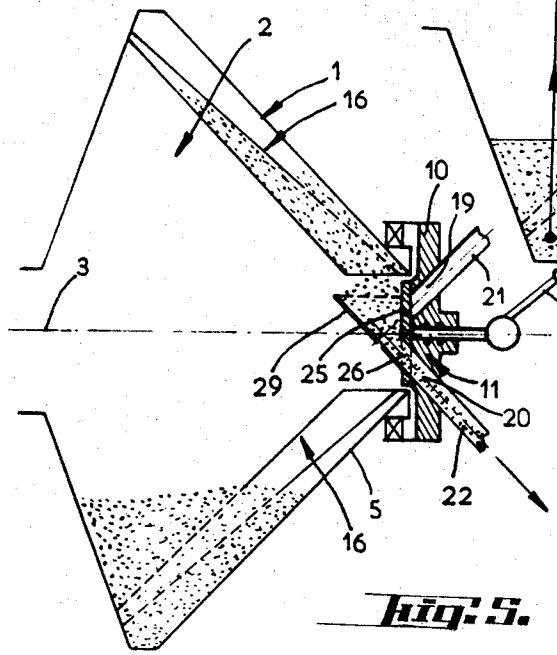

Fig: 5.

CHARGING AND DISCHARGING OF LYOPHILISATION APPARATUS

The present invention relates to rotary lyophilisation apparatus, and has for an object, improvements therein.

The majority of lyophilisation apparatus of the rotary type comprises a cylindrical box forming a sublimation enclosure, mounted to rotate about an axis, and within which box is placed a charge of congealed or frozen particles of a product which can be brought into a fluid state by rotation of the said box. The sublimation enclosure is usually fitted with heating means positioned either inside the cylindrical box (radiant heating) or outside it (radiant heating or bath of a heat-conducting fluid in which the cylindrical box is immersed).

The cylindrical box may be fitted with bladed stirring means which have no other object than to effect a more intense agitation of the particles and homogeneous exposure of the said particles to the heat.

With this apparatus, the heat supply to the product particles is limited, being due substantially to the fact that, during rotation of the enclosure, the product mass remains in the lower part thereof and only exchanges heat with the lower part of the hot wall of the sublimation enclosure, passing below it.

The present invention has for a particular object, substantially to increase the transfer of heat between the hot wall of the sublimation enclosure and the charge of congealed or frozen product particles, by providing bladed stirring means, rotating about an axis, cooperating with the said wall to distribute the quantity of product over the major part of the said wall.

The invention consists therefore in apparatus for the lyophilisation of congealed or frozen particles of a product, in which a box forming a sublimation enclosure for the particles is fitted with stirring means having at least one blade, which stirring means are arranged for relative rotation about an axis, heating means, a filler conduit and a downwardly inclined discharge conduit, one end of which is situated in an axial discharge zone, the discharge conduit being associated with an obturating member, wherein the stirring means comprises means serving in a lower part of the enclosure as a lifting device and in the upper part of the enclosure as a flow gutter directed towards the axial zone, discharge means also being situated close to the axial zone.

Preferably, the box forming the sublimation enclosure comprises at least one wall of truncated conical shape whose main axis is substantially horizontal, and whose small side defines the axial discharge zone. The conicity of this wall determines the slope of flow of the stirring means when they serve as a gutter.

Thus, when apparatus according to the invention is in operation, when the blade or blades of the stirring means is rotated about an axis, either because said means is securely connected to the wall of the enclosure in rotation or because it rotates independently and, in practice, in contact with the said fixed wall, the particles are entrained along the wall firstly in an upward and then in a downward direction, the last part of their downward travel being possibly effected by independent sliding between the blade or blades along the said wall. The particles, instead of being heated on the spot in the lower part of the sublimation enclosure are thus placed in contact with the actually heated part of the hot wall of the sublimation enclosure. This transfer of heat is further improved by contact with the blade or blades, when the latter are securely connected to the said wall by welding.

In lyophilisation apparatus according to the invention, the discharge tube is associated with an obturating member and the stirring means cooperate during rotation of the latter to empty the sublimation enclosure, once the particles are lyophilised. It is sufficient for this purpose that the obturating member be released to place the sublimation enclosure and the discharge conduit in communication so that the particles leaving the stirring means in the upper part of the enclosure flow directly by gravity into the discharge conduit.

By providing, moreover, a filling conduit descending towards the axial zone and having one end that is situated in the axial discharge zone as well as an obturating member for the discharge conduit, possibly common to the filler conduit, a charge of congealed or frozen particles is introduced by gravity.

The apparatus may thus be filled and emptied at the beginning and at the end of lyophilisation without introducing ambient air into the sublimation enclosure if the filling or charging and discharging conduits are connected respectively to a congealing or freezing apparatus supplying congealed or frozen particles, and to a vessel for receiving or conditioning lyophilised particles. It is thus possible to treat a product from the congealing or freezing phase to a conditioning phase of the lyophilised product without the latter having ever been in contact with the ambient air. This advantage is particularly important for products having to be treated in aseptical conditions or sheltered from any gaseous source of contamination or destruction of the product.

Congealing or freezing apparatus used with apparatus according to the invention also enables a product to be lyophilised continuously by introducing and evacuating successively, charges of the said product, without any other manipulation than that of a simple obturating member.

In order that the invention may be more clearly understood, reference will now be made to the accompanying drawings which show one embodiment thereof by way of example, and in which:

FIG. 1 shows a diagrammatic view in section of lyophilisation apparatus according to the invention,

FIG. 2 shows a view in section along the line II—II of FIG. 1 of an element of the apparatus shown in FIG. 1,

FIG. 3 shows diagrammatically in section the lyophilisation apparatus according to FIGS. 1 and 2 during a filling phase,

FIG. 4 shows diagrammatically in section the lyophilisation apparatus according to FIGS. 1 and 2 during a lyophilisation phase and more particularly the path of a particle during the said phase, and

FIG. 5 shows diagrammatically in section the lyophilisation apparatus according to FIGS. 1 and 2 during a discharge phase.

Referring now to the drawings, the lyophilisation apparatus according to FIG. 1 comprises essentially a metal box 1, which forms a sublimation enclosure 2 intended to receive a charge of congealed or frozen particles of a product before being lyophilised. The box 1 has preferably a symmetry of revolution with respect to a substantially horizontal axis 3. It comprises a curved wall 4 which is approximately part-spheroidal in shape and a wall 5 of truncated conical shape having an apex

angle of between 90° and 180°, the walls 4 and 5 joining up along the large base circumference of the truncated cone 5.

The box 1 is mounted for rotation about the axis of symmetry 3 for the walls 4 and 5. To this end, the spheroidal portion 4 is extended outside the box 1 by a cylindrical conduit 36 having the axis 3 as its axis of symmetry, the interior of which communicates with the sublimation enclosure 2, and the wall 5 is integral, outside the box 1, with an annular wall 6, also having the axis 3 as its axis of symmetry and arranged towards the small side of the truncated conical wall 5. The conduit 36 cooperates in rotation with a cylindrical evacuating conduit 7 on the axis 3, by means of lipped sealing joints 8; the conduit 7 is in successive communication with a device for stopping fines (cyclone), a condenser and a vacuum pump, not shown in FIG. 1. The annular wall 6 cooperates in rotation, by means of lipped sealing joints 12, with an annular support 9 also on the axis 3, integrated with a fixed plate 10 forming part of a charging and discharging device 11 which will hereinafter be described. The box 1 is rotated by means of an electric motor 13 via a drive wheel 14 cooperating with a pinion 15 integral with the external periphery of the cylindrical conduit 36.

The box 1 is equipped with stirring means having at least one metal blade, and arranged within the sublimation enclosure 2, which is or are integrated with the wall 5 by welding, and consequently capable of rotating about the axis 3. The stirring means preferably comprises a plurality of blades 16 regularly distributed around the wall 5. Each blade 16 has, as shown in FIGS. 1 and 2, a flat radial web 17 of decreasing size in the direction between the large and small sides of the wall 5, and a flat deflector 18 inclined towards the said web in the direction of rotation of the box 1 in order to form an angle of between 90°, and 180°, and preferably close to 135°. The deflector widens out in passing from the large side to the small side of the wall 5.

The lyophilisation apparatus of FIGS. 1 and 2 also comprises a device 11 for charging and discharging the sublimation enclosure 2, placed in the axial zone of the box 1 defined by the small side of the wall 5. This device 11 comprises a fixed part in the form of a thick plate 10 having the axis 3 as its axis of symmetry, and having oblique bores 19 and 20 whose axes of symmetry are situated in the same vertical plane perpendicular to the plate 10 passing through the axis 3, and make an equal angle with the said axis; a filling conduit 21 upwardly inclined on leaving the plate 10 and a discharge conduit 22 downwardly inclined on leaving the plate 10, discharge respectively into the bores 19 and 20. The conduit 21 communicates with rotary congealing or freezing apparatus 23 producing the product particles before being lyophilised, said apparatus being advantageously of the type described in French Pat. No. 1,522,286. The conduit 22 communicates with a filling vessel 24 intended to receive the lyophilised particles. The charging and discharging device 11 comprises, moreover, a movable obturating member 25, common to the conduits 21 and 22 and formed by a thick plate, also having axis 3 as its axis of symmetry, provided with an opening or passageway 26 in the form of an oblique bore applied against the cylindrical plate 10. The plate 25 is mounted to rotate about the axis 3 and is integrated with a hub 27 passing through the fixed plate 10 along the axis 3 and fitted with a handle 28. According to FIGS. 3 and 5 for two positions of the handle 28 situated at 180°one with respect to the other, thus for two positions of the obturating member 25, the oblique bore 26 coincides either with the bore 19 or with the bore 20 of the fixed plate 10 and the axis of the bore 25 is either in register with the axis of the bore 19 or with the axis of the bore 20. The obturating member 25 thus enables the sublimation enclosure 2 to be placed in communication either with the filling conduit 21 or with the discharge conduit 22. The oblique bore 26 is extended within the enclosure 2 by a deflector-funnel 29 integral with the plate 25, the wall of which is directed substantially along the axis of the bore 26. The vacuum sealing between the fixed plate 10 and the blocking member 25 is ensured, as shown in FIG. 1, by joints 30 and the seal between the hub 27 and the fixed plate 10 by joints 31.

The lyophilisation apparatus also comprises heating means formed by a thermally insulated tank 32 for a heat-conducting liquid 33 heated by an electrical resistance element 34. The lower part of the box 1 is arranged within the tank 32 and is thus immersed in the heat-conducting liquid 33.

The conduit 36 is extended within the sublimation enclosure by a grating 35 intended to stop the fines and defining a cylindrical chamber on the axis 3.

In operation, vacuum is formed in the sublimation enclosure by means of the conduit 7, the box 1 is caused to rotate about the axis 3 by means of the electric motor 13 and the sublimation enclosure 2 is heated by the heat-conducting liquid heated by the electrical resistance element 34.

As shown in FIG. 3, the filling of the sublimation enclosure is effected by placing the filling conduit 21 and the enclosure 2 in communication by means of the obturating member 25. The congealed or frozen particles issuing from the rotary device 23 by gravity, flow through the conduit 21 and enter the sublimation enclosure 2 to accumulate in its base. Once the load is introduced, the obturating member 25 is placed at 90° with respect to its filling position about the axis 3, and the sublimation enclosure is thus insulated both from the filling conduit 21 and the discharge conduit 22.

The lyophilisation phase then commences and the heat and mass exchanges effected are improved by rotation of the box 1. According to FIG. 4, each time that a blade 16 is in the lower part of the enclosure 2, the said blade serves as a lifting device for the particles, a longitudinal edge of the blade 16 or the longitudinal edge of the deflector 18 forming a driving edge therefor. Then, during rotation of the box 1, the particles accumulated between the wall 5 and the blade 16 are driven towards the upper part of the enclosure. When the blade 16 is in the upper part of the enclosure and has an inclination with respect to a horizontal plane of the order of 45° to 50°, it serves as a flow gutter for the particles towards the axial filling and emptying zone defined by the small side of the truncated conical wall 5. The particles slide along the blade 16, leave the latter, meet the obturating member 25, then regain the lower part of the enclosure 2 by sliding between the blade 16, and over the wall 5, itself inclined at 45° – 50° with respect to the horizontal. The paths of the particles are shown in FIG. 4 by the line 37 between points A and B.

Once the charge is lyophilised, the discharge of the enclosure is effected, as shown in FIG. 5, by placing the

discharge conduit **22** and the enclosure **2** in communication by means of the obturating member **25.** The lyophilised particles driven by a blade **16,** when they leave the latter in the upper part of the enclosure **2,** encounter the deflector-funnel **29,** which preferably has a semi-funnel shape, and flow by gravity through the bore **26** in the conduit **22** towards the filling vessel **24.**

The present invention is not limited to the embodiment of FIGS. **1** and **2.** The bladed stirring means **16** may be rotatable about the axis **3,** the sublimation box **1** being fixed. The heating means may comprise a radiating source (infra-red) arranged within or outside the box.

The lyophilisation apparatus according to the invention can be used for the aseptical treatment of products or the continuous batchwise treatment of products to be dessicated.

I claim:

1. Apparatus for the lyophilization of congealed or frozen particles of material, comprising means forming a sublimation enclosure for said material, heating means for said enclosure, gravity means for filling said enclosure and for discharging material from said enclosure, stirring means rotatable about a horizontal axis in said enclosure, said stirring means comprising blades disposed in a hollow truncated conical bundle, the conicity of said bundle being at least 90°, said blades having the shape of gutters which in their upper rotated positions direct said material toward the smaller base of said conical bundle.

2. Apparatus as claimed in claim **1,** said gravity filling and discharging means opening through said smaller base of said truncated conical bundle.

3. Apparatus as claimed in claim **2,** said filling means comprising a downwardly inclined deflector-funnel that is disposed between the ends of said blades at said smaller base of said truncated conical bundle.

4. Apparatus as claimed in claim **1,** said blades being mounted on an inner wall of said enclosure, and means mounting said enclosure for rotation about a horizontal axis.

5. Apparatus as claimed in claim **4,** each said blade having a web extending radially of said axis and secured to said wall and a deflector which is inclined to the web in the direction of rotation of said enclosure.

6. Apparatus as claimed in claim **5,** said web decreasing in width and said deflector increasing in width in a direction from the larger base of said truncated conical bundle to the smaller base of said truncated conical bundle.

7. Apparatus as claimed in claim **1,** and an obturating member in the form of a plate disposed in a plane perpendicular to said axis and rotatable about said axis, said plate having an opening therethrough which in one rotated position of said plate opens said filling means and closes said discharge means and in another rotated position of said plate closes said filling means and opens said discharge means.

8. Apparatus as claimed in claim **7,** and a deflector-funnel secured to said plate about said opening and inclined away from said opening in a direction toward said axis and extending into said enclosure, said filling means being above said discharge means so that when said opening communicates with said filling means, said deflector-funnel is downwardly inclined and when said opening communicates with said discharge means, said deflector-funnel is upwardly inclined.

9. Apparatus as claimed in claim **8,** said gravity filling means comprising a first conduit inclined downwardly toward said axis in the direction of the interior of said enclosure, said gravity discharge means comprising a second conduit inclined downwardly from said axis in a direction away from the interior of said enclosure, said deflector-funnel forming an extension of one of said first and second conduits in each of said two positions of said plate.

10. Apparatus as claimed in claim **1,** said gravity filling means comprising first conduit means inclined downwardly toward said axis in the direction of the interior of said enclosure, said gravity discharge means comprising second conduit means inclined downwardly from said axis in a direction away from the interior of said enclosure.

* * * * *