E. E. ENGLE.

EXTENSIBLE RUNNING BOARD FOR FREIGHT CARS.

APPLICATION FILED FEB. 13, 1912.

1,051,205. Patented Jan. 21, 1913.

Fig. 1.

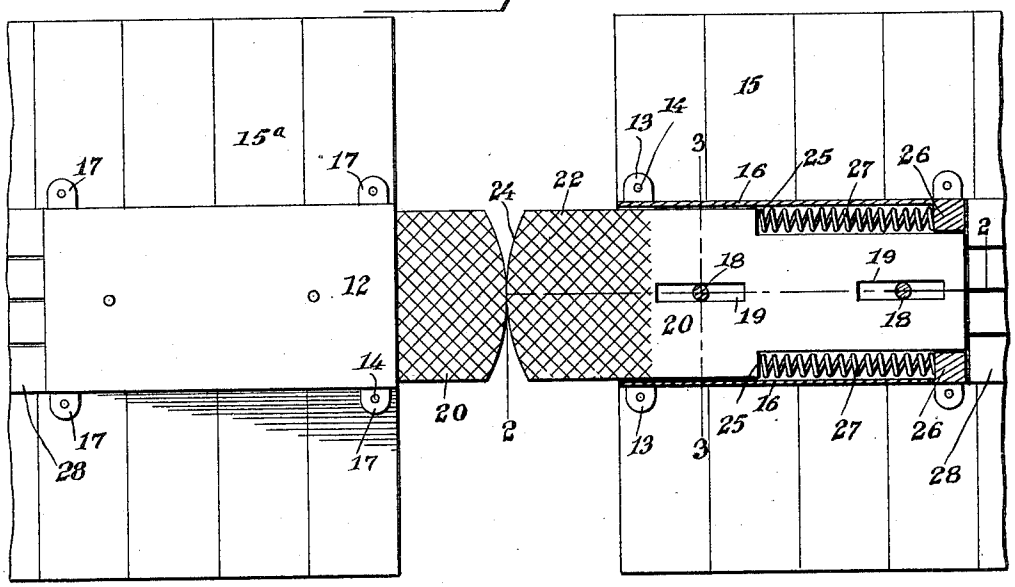

Fig. 2.

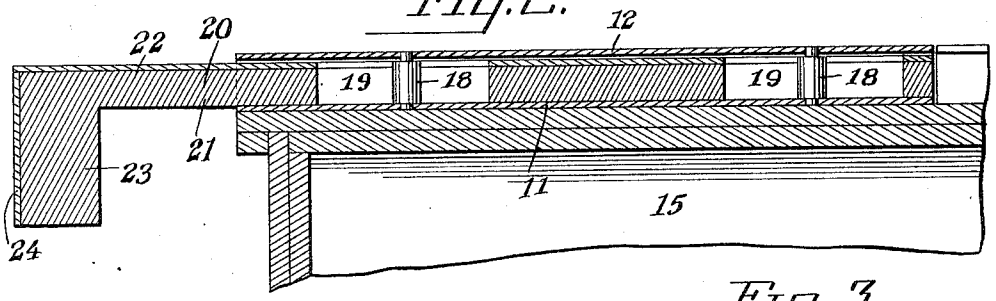

Fig. 3.

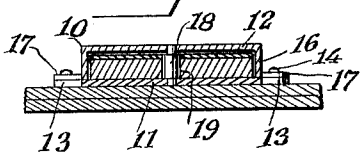

Fig. 4.

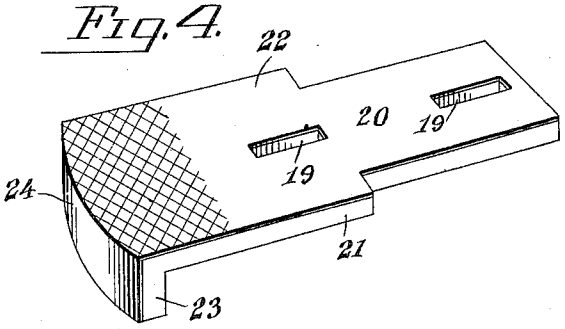

Inventor

Edwin E. Engle

By Victor J. Evans

Attorney

Witnesses

M. F. Garrett

F. H. Porter

COLUMBIA PLANOGRAPH CO., WASHINGTON, D. C.

UNITED STATES PATENT OFFICE.

EDWIN E. ENGLE, OF SAYRE, OKLAHOMA.

EXTENSIBLE RUNNING-BOARD FOR FREIGHT-CARS.

1,051,205. Specification of Letters Patent. Patented Jan. 21, 1913.

Application filed February 13, 1912. Serial No. 677,300.

To all whom it may concern:

Be it known that I, EDWIN E. ENGLE, a citizen of the United States, residing at Sayre, in the county of Beckham and State of Oklahoma, have invented new and useful Improvements in Extensible Running-Boards for Freight-Cars, of which the following is a specification.

An object of the invention is to provide an extensible running board for freight cars to permit brakemen and others to walk from the top of one car to the top of an adjacent car without endangering themselves, particularly when the cars are in motion.

To accomplish the desired result, use is made of an extensible member mounted on the top of a car and arranged to slide thereon, the said member being mounted in the plane of the usual running board and adapted to form a continuous walk with the extensible member of an adjacent car, the outer ends of the said extensible members being arranged to abut, the said extensible members being also arranged to adjust themselves to the relative positions of the adjacent cars.

In the further disclosure of the invention, reference is to be had to the accompanying drawings constituting a part of this specification, in which similar characters of reference denote corresponding parts in all the views, and in which—

Figure 1 is a plan view showing a plurality of connected cars, my device being mounted thereon, parts being broken away to disclose the underlying structure. Fig. 2 is an enlarged longitudinal sectional view taken on the line 2—2 in Fig. 1. Fig. 3 is a vertical transverse sectional view taken on the line 3—3 in Fig. 1. Fig. 4 is a perspective view of the extensible member.

Referring more particularly to the views, use is made of a casing 10 comprising a base 11 and a cover 12, said base 11 being provided with integral ears 13 having apertures 14 adapted to receive bolts therethrough for rigidly securing the base 11 to the roof of a car 15, the cover 12 being provided with depending sides 16 adapted to repose upon the base 11 with ears 17 mounted to extend outwardly from the sides 16 and lying upon the ears 13, the mentioned bolts 14 being also extended through apertures in the ears 17 to rigidly secure the cover 12 to the base 11.

Mounted in apertures formed in the base 11 are upwardly extending guide pins 18 arranged to loosely extend through slots 19 formed in an extensible member 20, slidably interposed between the base 11 and cover 12. The extensible member 20 is preferably made of a wooden body 21 covered with a metallic plate 22, the mentioned body 21 terminating at the forward end in a depending head 23 with the forward end of the plate 22 bent to extend over the outer side of the head, thus forming an abutting edge 24, said edge being preferably curved as shown. The rear portion of the extensible member 20 is reduced to form shoulders 25 and formed on the base 11 are blocks 26, expansible helical springs 27 being interposed between the shoulders 25 and blocks 26 with the ends of the springs abutting against the said shoulders and blocks to normally retain the forward end of the extensible member 20 exteriorly of the casing 10, the upper side of the plate 22 at the forward end being preferably knurled as shown. The cover 12 is provided with apertures in which are received the upper ends of the pins 18 thus preventing the pins from sliding with the extensible member 20, said pins forming guide members for guiding the extensible member relatively to the casing 10.

In the use of my device the same is mounted on the car 15 to lie in the longitudinal plane of the usual running board 28 of the car, the forward end of the extensible member 20 being adapted to normally extend a distance beyond the end of the car with the curved edge 24 abutting against the curved edge of a similar extensible member mounted in a similar manner on an adjacent car 15^a, it being readily seen by referring to Fig. 1 that the outward movement of the extensible member 20 is limited by the pins 18 extending through the slots 19 and by providing the springs 27 the extensible member, slidable in the casing 10 will readily adjust itself relatively to the extensible member of the adjacent car and it will be further seen that adjacent extensible members having their curved edges abutting will form a continuous walk with the running boards of the cars so that a brakeman can easily pass from one car to another without endangering himself or without fear of falling between the cars, particularly when the cars are in motion, it being well known that

the usual procedure of a brakeman, in passing from one car to another, is to jump across the intervening space between the cars.

I claim:—

In a device of the class described the combination with a casing comprising a base having a cover connected thereto, of an extensible member mounted to slide in the said casing and provided with longitudinally extending slots, pins mounted in the said casing and extending through the slots in the said member for guiding the same relatively to the casing, blocks formed on the said base and springs mounted to abut against the blocks and said extensible member to normally retain the forward end thereof a distance beyond the forward edge of the said casing.

In testimony whereof I affix my signature in presence of two witnesses.

EDWIN E. ENGLE.

Witnesses:

LE H. TAYLOR,

C. H. CLAY.

Copies of this patent may be obtained for five cents each, by addressing the "Commissioner of Patents Washington, D. C."