PCT WORLD INTELLECTUAL PROPERTY ORGANIZATION
International Bureau

INTERNATIONAL APPLICATION PUBLISHED UNDER THE PATENT COOPERATION TREATY (PCT)

(51) International Patent Classification 7 : A61F 9/007 — A1

(11) International Publication Number: **WO 00/03668**

(43) International Publication Date: 27 January 2000 (27.01.00)

(21) International Application Number: PCT/US99/16019

(22) International Filing Date: 14 July 1999 (14.07.99)

(30) Priority Data:
09/118,492 17 July 1998 (17.07.98) US

(71) Applicant: ALLERGAN SALES, INC. [US/US]; 2525 Dupon Drive, Irvine, CA 92612 (US).

(72) Inventor: PORTNEY, Valdemar; 7 Alassio, Irvine, CA 92720 (US).

(74) Agents: BARAN, Robert, J. et al.; Allergan Sales, Inc., 2525 Dupont Drive, Irvine, CA 92612 (US).

(81) Designated States: JP, European patent (AT, BE, CH, CY, DE, DK, ES, FI, FR, GB, GR, IE, IT, LU, MC, NL, PT, SE).

Published
With international search report.

(54) Title: SELF-REGULATING PHACO SLEEVE TO REDUCE TISSUE BURN

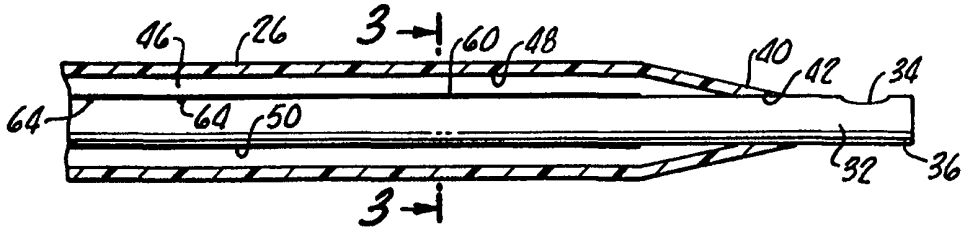

(57) Abstract

The sleeve apparatus for a phacoemulsification/irrigation and aspiration handpiece (10) having an ultrasonic drive assembly attached to a hollow needle (32) includes a compressible sleeve (26) for establishing an annular passage around the needle (32) and enabling the irrigation fluid to pass into an eye through a cornea/sclera wound while colling the needle (32). The heat activated element (60) is provided and disposed between the compressible sleeve (26) and the needle (32) for preventing contact between the compressible sleeve (26) and the needle (32) and maintaining the annular passage therebetween for irrigation fluid flow.

FOR THE PURPOSES OF INFORMATION ONLY

Codes used to identify States party to the PCT on the front pages of pamphlets publishing international applications under the PCT.

AL	Albania	**ES**	Spain	**LS**	Lesotho	**SI**	Slovenia
AM	Armenia	**FI**	Finland	**LT**	Lithuania	**SK**	Slovakia
AT	Austria	**FR**	France	**LU**	Luxembourg	**SN**	Senegal
AU	Australia	**GA**	Gabon	**LV**	Latvia	**SZ**	Swaziland
AZ	Azerbaijan	**GB**	United Kingdom	**MC**	Monaco	**TD**	Chad
BA	Bosnia and Herzegovina	**GE**	Georgia	**MD**	Republic of Moldova	**TG**	Togo
BB	Barbados	**GH**	Ghana	**MG**	Madagascar	**TJ**	Tajikistan
BE	Belgium	**GN**	Guinea	**MK**	The former Yugoslav Republic of Macedonia	**TM**	Turkmenistan
BF	Burkina Faso	**GR**	Greece			**TR**	Turkey
BG	Bulgaria	**HU**	Hungary	**ML**	Mali	**TT**	Trinidad and Tobago
BJ	Benin	**IE**	Ireland	**MN**	Mongolia	**UA**	Ukraine
BR	Brazil	**IL**	Israel	**MR**	Mauritania	**UG**	Uganda
BY	Belarus	**IS**	Iceland	**MW**	Malawi	**US**	United States of America
CA	Canada	**IT**	Italy	**MX**	Mexico	**UZ**	Uzbekistan
CF	Central African Republic	**JP**	Japan	**NE**	Niger	**VN**	Viet Nam
CG	Congo	**KE**	Kenya	**NL**	Netherlands	**YU**	Yugoslavia
CH	Switzerland	**KG**	Kyrgyzstan	**NO**	Norway	**ZW**	Zimbabwe
CI	Côte d'Ivoire	**KP**	Democratic People's Republic of Korea	**NZ**	New Zealand		
CM	Cameroon			**PL**	Poland		
CN	China	**KR**	Republic of Korea	**PT**	Portugal		
CU	Cuba	**KZ**	Kazakstan	**RO**	Romania		
CZ	Czech Republic	**LC**	Saint Lucia	**RU**	Russian Federation		
DE	Germany	**LI**	Liechtenstein	**SD**	Sudan		
DK	Denmark	**LK**	Sri Lanka	**SE**	Sweden		
EE	Estonia	**LR**	Liberia	**SG**	Singapore		

SELF-REGULATING PHACO SLEEVE TO REDUCE TISSUE BURN

The present invention generally relates to phacoemulsification handpieces for the removal of a cataract lens from an eye and is more particularly related to sleeve apparatus for a phacoemulsification handpiece.

A well known method for the removal of a cataract through a surgical incision in the eye is known as phacoemulsification. A handpiece for phacoemulsification generally includes an ultrasonic generator which is attached to a hollow needle which is vibrated and, when inserted into an eye, is capable of the emulsion of an eye lens and aspiration thereof through a lumen in the needle. The needle is surrounded by a sleeve when inserted through an incision in the eye. The tip of the needle engages and emulsifies the cataract and a suction force is applied through the needle interior lumen to withdraw the emulsified cataract into the needle and out of the eye.

The sleeve protects the wound through which the needle is passed from contacting the needle which can become heated and the sleeve further establishes an annular passage around the needle for providing an irrigation fluid to the eye while at the same time cooling the needle.

Typically, the cornea or sclera incision is linear and has a length approximately to one-half the circumference of the sleeve in order to minimize fluid leakage from the incision, or wound, when the needle/sleeve is inserted therethrough.

A great number of sleeve designs have been proposed and a number of materials have been utilized in prior art sleeves. For example, U.S. Patent No. 4,787,889 to Steppe et al, discloses a flexible sleeve made of a synthetic resin such as silicon rubber which is able to fold back or telescope when inserted through an incision. The problems with these prior art devices include collapsing of the flexible sleeve in the area of the wound by pressure from surrounding tissue. This collapsing of the sleeve blocks flow of the irrigation to the surgical site and around the vibrating needle, which can cause overheating and damage to adjacent tissue. Sleeves made out of metallic material, such as also described in the hereinabove referenced U.S. patent, do not allow collapse and, accordingly, allow a greater fluid leakage from the wound.

In order to minimize leakage from the wound past the sleeve and the elliptical sleeve has been proposed, for example, see U.S. Patent No. 5,084,009. This collapsible, or compressible, sleeve is made with a shape matching the configuration of a surgical incision in order to minimize leakage between the exterior surface of the sleeve and the surgical incision. However, in order for the ultrasonic needle to exhibit a desired and vibratory motion, which is relatively free from damping, this rounding sleeve must be prohibited from touching the needle during the operation.

During operation procedures, the needle must be partially rotated and its angle of incident changed in order to effect complete phacoemulsification and movement of the lens. In these procedures, a soft sleeve, particularly one shaped to the size of the wound, may collapse, or deflect against the ultrasonic needle. When the sleeve is pushed against the rapidly

vibrating needle, the needle and sleeve tend to overheat due to friction, which may damage delicate cornea or sclera tissue, particularly the corneal epithelium.

The present invention is directed to a sleeve which, in response to needle temperature, self-regulates in order to maintain proper annular channel around the needle for passage of cooling fluid and prevent the needle from touching the sleeve.

SUMMARY OF THE INVENTION

The sleeve apparatus in accordance with the present invention for a phacoemulsification/irrigation and aspiration handpiece generally includes a compressible sleeve which provides a means for establishing an annular passage around a needle of the handpiece and enabling irrigation fluid to pass into an eye through a cornea/sclera wound while at the same time cooling the needle. In combination therewith, heat activated means are provided and disposed between the compressible sleeve and the needle for preventing contact between the compressible sleeve means and the needle and maintaining the annular passage for irrigation fluid flow.

In this regard, the heat activated means is heat sensitive for controlling a size of the annular passage in response to needle temperature. Accordingly, the heat sensitive means is self-regulating for maintaining the annular passage around the needle in order to reduce incidence of cornea/sclera tissue burn.

More particularly, the heat activated means may comprise a bimetallic element or spring. In one embodiment, the bimetallic spring includes a U-shaped

element fixed to the needle with movable arms extending therefrom. Two bimetallic springs may be provided which are oriented within the annular passage at 108° angular relationship from one another.

It is to be appreciated that the heat-activated means may include any heat expandable element and in another embodiment of the present invention, the heat expandable element may be disposed longitudinally along the needle.

BRIEF DESCRIPTION OF THE DRAWINGS

The present invention may be more clearly appreciated when taken in conjunction with the accompanying drawings, in which:

Figure 1 is a perspective view of a phacoemulsification handpiece utilizing the sleeve apparatus in accordance with the present invention as it may be inserted through a cornea/sclera wound with the removal of a cataract lens from a lens capsule;

Figure 2 is a cross sectional view of one embodiment of sleeve apparatus in accordance with the present invention which includes a compressible sleeve and a heat expandable element attached to a needle within the sleeve which, being heat activated, prevents contact between the compressible sleeve and the needle in order to maintain an annular passage for irrigation fluid flow;

Figure 3 is a cross section taken along the line 3-3 of Figure 2 showing the heat expandable element in unexpanded state and disposed generally against the needle;

Figure 4 is a cross sectional view corresponding to Figure 2 in which the activated means, or expandable element, is heated to cause a serpentine ribbon between the needle and the sleeve in order to prevent contact between the compressible sleeve and the needle;

Figure 5 is a cross sectional view taken along the line 5-5 of Figure 4 showing an expanded heat-activated element;

Figure 6 is another embodiment in accordance with the present invention in which a plurality of U-shaped bimetallic springs are attached to the needle, which are heat-sensitive, and act to control the size of the annular passage between the needle and the sleeve as a function of needle temperature;

Figure 7 is a cross-sectional view taken along the line 7-7 of Figure 6 showing curved U-shaped bimetallic elements for maintaining the angular passage around the needle in order to reduce incidence of cornea/sclera tissue burn; and

Figure 8 is an enlarged view of the needle, sleeve and bimetallic element activated to maintain an annular passage between the needle and the sleeve.

DETAILED DESCRIPTION OF THE DRAWINGS

Turning now to Figure 1, there is shown a phacoemulsification handpiece 10 utilizing sleeve apparatus 12 in accordance with the present invention for removing a cataract lens 16 by emulsification/aspiration through a corneal/sclera wound 20. The phaco handpiece, or instrument 10, may be of any conventional type operating, as is well known to those skilled in the art, except as modified with

the sleeve apparatus 12 in accordance with the present invention. The sleeve apparatus 12 includes a sleeve 26 and a hub 28 fixed thereto.

It should be appreciated that the sleeve 26 and the hub 28 may be formed from the same type of material, for example, a silicone or a silicon-type material, or a thermoplastic polyurethane. Further the sleeve 26 and the hub may be inner fixed to one another or integrally formed.

The handpiece 10, includes an ultrasonic drive assembly, not shown, attached to a hollow needle 32, see Figure 2, which includes at least one port 34 disposed in an end 36, a needle 32, the end 36 protruding through the sleeve 26 at a distal end 40 with a seal 42 disposed therebetween.

As shown in Figure 2, an annular passage of 46 is established between an inside surface 48 of the sleeve 26 and an outside surface 50 of the needle 32 in order to enable irrigation fluid, provided by the handpiece, to pass around the needle 32 and through the port 34 in a conventional manner, the fluid inner connection between the annular passage 46 and the handpiece, is not shown, as this arrangement is well known in the art.

It is important that during a phacoemulsification procedure, tissue surrounding the cornea/sclera wound will not be damaged, particularly the epithelium layer under the cornea. Since damage to this tissue may occur due to heating, it is also important that the needle 32 not contact the sleeve 26 because conductive heat transfer to the tissue surrounding the wound 20 would cause undesired heating thereof.

Accordingly, heat activated means 60 disposed between the compressible sleeve 26 and the needle 32 is provided for preventing contact between the compressible sleeve 26 and the needle 32 and further maintaining an annular passage for irrigation fluid flow. This heat activated means comprises a heat sensitive element which may be metal but importantly has a greater coefficient of expansion than the needle 32. The element 60 is attached to the needle at various spaced apart points 64 so that upon heating of the needle 32, expansion of the elements 60 occurs as shown in Figure 4.

Preferably, two or more of the elements are provided and preferably disposed in a uniformed angularly spaced apart relationship around the needle 32 and between the needle 32 and the sleeve 26 in order to maintain the annular passage 46.

Figure 3 shows the element 60 attached to the needle in an unheated state and corresponding to Figure 4, the cross section shown in Figure 5 shows the element 60 expanded in order to prevent contact between the needle 32 and the sleeve 26.

As hereinabove noted, any suitable material may be utilized for the heat sensitive element 64 as long as an appropriate coefficient of expansion is selected. Accordingly, this material will depend upon the material of construction of the sleeve 32.

An alternative embodiment 80 of the present invention is shown in Figures 6-8. In this embodiment, a plurality of heat activated bimetallic springs 82 are attached to the needle 32 by spot welding or the like at a central point 86, see Figure 8.

As shown in Figure 6, these bimetallic springs lie relatively flat against the needle 32, but upon heating thereof by a rise of temperature, the needle 32, the heat sensitive, or activated springs 82, become U-shaped as shown in Figures 7 and 8. Essentially, the bimetallic springs have movable arms 86 extending and contacting the sleeve 26 as shown in Figures 7 and 8 in order to prevent contact between the compressible sleeve 26 and the needle 32 while maintaining an annular passage 46 for passage of the irrigation fluid.

It should be appreciated that any well known type of bimetallic element or combination of materials having different coefficient of expansions may be utilized in accordance with the present invention so that movement occurs in response to the heat generated by the needle 32 which may achieve temperatures in the order of about 50° C. during operation.

Although there has been hereinabove described specific embodiments of sleeve apparatus in accordance with the present invention, for the purpose of illustrating the manner to which the invention may be used to advantage, it should be appreciated that the invention is not limited thereto. Accordingly, any and all embodiments, variations, or equivalent arrangements which may occur to those skilled in the art, should be considered to be within the scope of the present invention as defined in the appended claims.

2429

WHAT IS CLAIMED IS:

1. Sleeve apparatus for a phacoemulsification/irrigation and aspiration handpiece having an ultrasonic drive assembly attached to a hollow needle for emulsifying and aspirating a cataract lens through a cornea/sclera wound, said sleeve apparatus comprising:

compressible sleeve means for establishing an annular passage around the needle and enabling irrigation fluid to pass into an eye through the cornea/sclera wound while cooling the needle; and

heat activated means, disposed between said compressible sleeve means and said needle, for preventing contact between said compressible sleeve means and said needle and maintaining the annular passage for irrigation fluid flow.

2. The sleeve apparatus according to claim 1 wherein said heat activated means comprises a bimetallic spring.

3. The sleeve apparatus according to claim 2 wherein said bimetallic spring comprises a U-shaped element fixed to said needle with movable arms extending therefrom.

4. The sleeve apparatus according to claim 1 wherein said heat activated means comprises two bimetallic spring oriented within said annular passage at 180° from one another.

5. The sleeve apparatus according to claim 4 wherein each of the two bimetallic springs are U-shaped

elements fixed to said needle with movable arms extending therefrom.

6. The sleeve apparatus according to claim 1 wherein said heat activated means comprises a heat expandable element.

7. The sleeve apparatus according to claim 6 wherein said heat expandable element is disposed longitudinally along said needle.

8. Sleeve apparatus for a phacoemulsification/irrigation and aspiration handpiece having an ultrasonic drive assembly attached to a hollow needle for emulsifying and aspirating a cataract lens through a cornea/sclera wound, said sleeve apparatus comprising:

compressible sleeve means for establishing an annular passage around the needle and enabling irrigation fluid to pass into an eye through the cornea/sclera wound while cooling the needle, and

heat sensitive, self-regulating means, disposed between said compressible sleeve means and said needle for maintaining the annular passage around the needle in order to reduce incidence of cornea/sclera tissue burn.

9. The sleeve apparatus according to claim 8 wherein said heat sensitive regulating means comprises a bimetallic spring.

10. The sleeve apparatus according to claim 9 wherein said bimetallic spring comprises a U-shaped element fixed to said needle with movable arms extending therefrom.

11. The sleeve apparatus according to claim 8 wherein said heat sensitive self-regulating means comprises two bimetallic spring oriented within said annular passage at 180° from one another.

12. The sleeve apparatus according to claim 11 wherein each of the two bimetallic springs are U-shaped elements fixed to said needle with movable arms extending therefrom.

13. The sleeve apparatus according to claim 8 wherein said heat sensitive self-regulating means comprises a heat expandable element.

14. The sleeve apparatus according to claim 13 wherein said heat expandable element is disposed longitudinally along said needle.

15. Sleeve apparatus for a phacoemulsification/irrigation and aspiration handpiece having an ultrasonic drive assembly attached to a hollow needle for emulsifying and aspirating a cataract lens through a cornea/sclera wound, said sleeve apparatus comprising:

compressible sleeve means for establishing an annular passage around said needle and enabling irrigation fluid to pass into an eye through the cornea/sclera wound while cooling the needle; and

heat sensitive means, disposed between said compressible sleeve and said needle for controlling a size of said annular passage in response to needle temperature, the annular passage size being increased in response to increased needle temperature.

16. The sleeve apparatus according to claim 15 wherein said heat sensitive means comprises a bimetallic spring.

17. The sleeve apparatus according to claim 16 wherein said bimetallic spring comprises a U-shaped element fixed to said needle with movable arms extending therefrom.

18. The sleeve apparatus according to claim 15 wherein said heat sensitive means comprises two bimetallic springs oriented within said annular passage at 180° from one another.

19. The sleeve apparatus according to claim 18 wherein each of the two bimetallic springs are U-shaped elements fixed to said needle with movable arms extending therefrom.

20. The sleeve apparatus according to claim 15 wherein said heat sensitive means comprises a heat expandable element.

21. The sleeve apparatus according to claim 20 wherein said heat expandable element is disposed longitudinally along said needle.

1/1

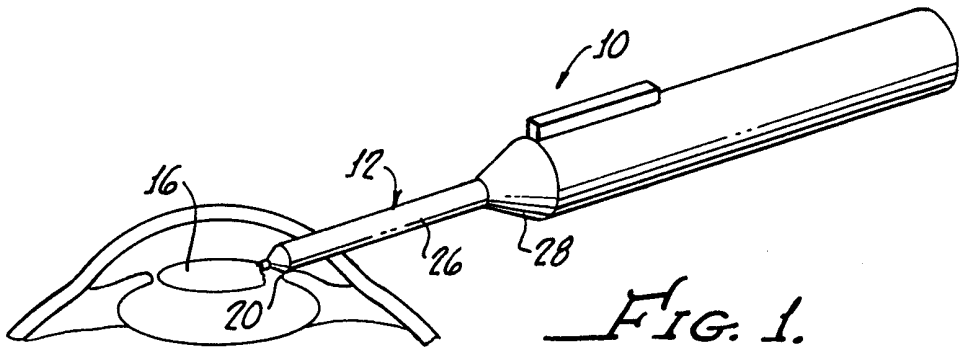

FIG. 1.

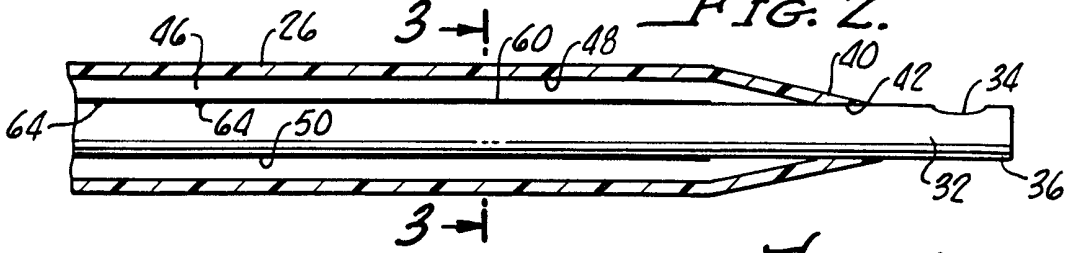

FIG. 2.

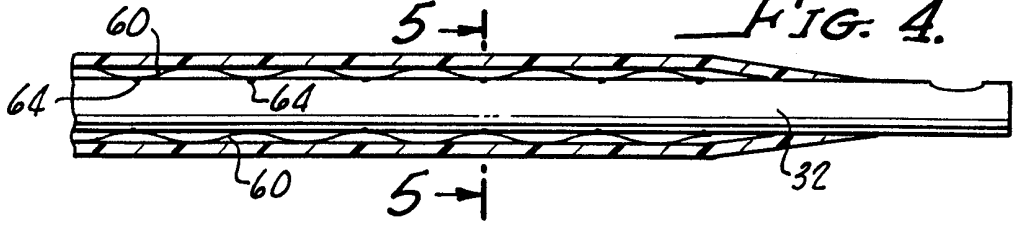

FIG. 4.

FIG. 3.

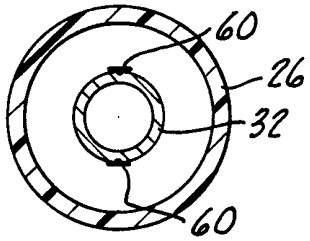

FIG. 5.

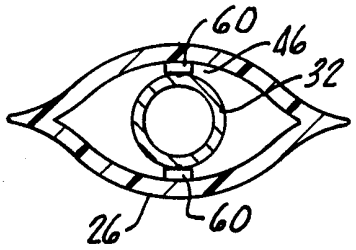

FIG. 6

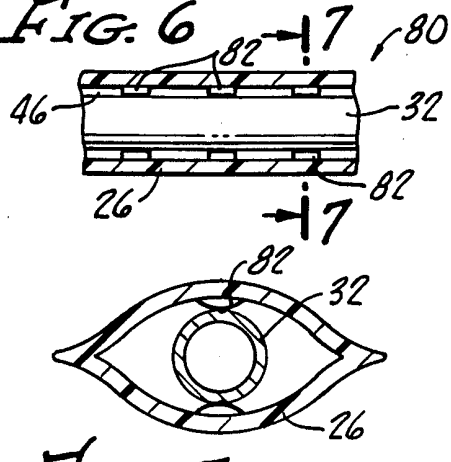

FIG. 7.

FIG. 8.

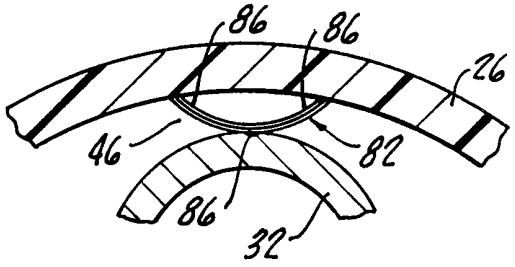

INTERNATIONAL SEARCH REPORT

Inte ional Application No
PCT/US 99/16019

A. CLASSIFICATION OF SUBJECT MATTER
IPC 7 A61F9/007

According to International Patent Classification (IPC) or to both national classification and IPC

B. FIELDS SEARCHED

Minimum documentation searched (classification system followed by classification symbols)
IPC 7 A61F

Documentation searched other than minimum documentation to the extent that such documents are included in the fields searched

Electronic data base consulted during the international search (name of data base and, where practical, search terms used)

C. DOCUMENTS CONSIDERED TO BE RELEVANT

Category °	Citation of document, with indication, where appropriate, of the relevant passages	Relevant to claim No.
A	WO 96 07377 A (OVERSBY PTY LTD ;BARRETT GRAHAM DAVID (AU)) 14 March 1996 (1996-03-14) page 5, line 9 - line 14 page 11, line 23 - line 31; figures 8,8B	1,7,8, 14,15,21
A	WO 98 25542 A (STAAR SURGICAL CO INC) 18 June 1998 (1998-06-18) page 16, line 4 - line 7; figure 7	1,8,15
A	US 5 685 841 A (MACKOOL RICHARD J) 11 November 1997 (1997-11-11) column 4, line 53 - line 61; figures 6,7	1,8,15
A	US 4 808 154 A (FREEMAN JERRE M) 28 February 1989 (1989-02-28) column 5, line 35 - line 42; figures 6,7	1,8,15

-/--

[X] Further documents are listed in the continuation of box C.

[X] Patent family members are listed in annex.

° Special categories of cited documents :

"A" document defining the general state of the art which is not considered to be of particular relevance

"E" earlier document but published on or after the international filing date

"L" document which may throw doubts on priority claim(s) or which is cited to establish the publication date of another citation or other special reason (as specified)

"O" document referring to an oral disclosure, use, exhibition or other means

"P" document published prior to the international filing date but later than the priority date claimed

"T" later document published after the international filing date or priority date and not in conflict with the application but cited to understand the principle or theory underlying the invention

"X" document of particular relevance; the claimed invention cannot be considered novel or cannot be considered to involve an inventive step when the document is taken alone

"Y" document of particular relevance; the claimed invention cannot be considered to involve an inventive step when the document is combined with one or more other such documents, such combination being obvious to a person skilled in the art.

"&" document member of the same patent family

Date of the actual completion of the international search	Date of mailing of the international search report
15 October 1999	26/10/1999

Name and mailing address of the ISA	Authorized officer
European Patent Office, P.B. 5818 Patentlaan 2 NL – 2280 HV Rijswijk Tel. (+31–70) 340–2040, Tx. 31 651 epo nl, Fax: (+31–70) 340–3016	Mayer, E

1

Form PCT/ISA/210 (second sheet) (July 1992)

INTERNATIONAL SEARCH REPORT

Int ional Application No
PCT/US 99/16019

C.(Continuation) DOCUMENTS CONSIDERED TO BE RELEVANT

Category °	Citation of document, with indication,where appropriate, of the relevant passages	Relevant to claim No.
A	US 4 731 085 A (KOCH WERNER-LUTZ) 15 March 1988 (1988-03-15) column 14, line 60 - line 66 column 16, line 37 - line 45; figure 4	1,8,15

1

Form PCT/ISA/210 (continuation of second sheet) (July 1992)

INTERNATIONAL SEARCH REPORT

Information on patent family members

Inte ional Application No
PCT/US 99/16019

Patent document cited in search report	Publication date	Patent family member(s)	Publication date
WO 9607377 A	14-03-1996	AU 684224 B	04-12-1997
		AU 3336595 A	27-03-1996
		CA 2198259 A	14-03-1996
		EP 0778757 A	18-06-1997
		JP 10507655 T	28-07-1998
		US 5718676 A	17-02-1998
		US 5935096 A	10-08-1999
		ZA 9507375 A	17-04-1996
WO 9825542 A	18-06-1998	US 5830192 A	03-11-1998
		AU 5368998 A	03-07-1998
US 5685841 A	11-11-1997	NONE	
US 4808154 A	28-02-1989	NONE	
US 4731085 A	15-03-1988	DE 3440952 A	15-05-1986
		DE 3515154 A	06-11-1986
		DE 3532125 A	19-03-1987
		AT 44867 T	15-08-1989
		AT 64844 T	15-07-1991
		EP 0180247 A	07-05-1986
		EP 0312698 A	26-04-1989
		US 5061285 A	29-10-1991