Oct. 15, 1963 G. DUCOMMUN 3,106,817

CLOCK WITH SEVERAL DIALS

Filed May 29, 1961 2 Sheets-Sheet 1

FIG.1

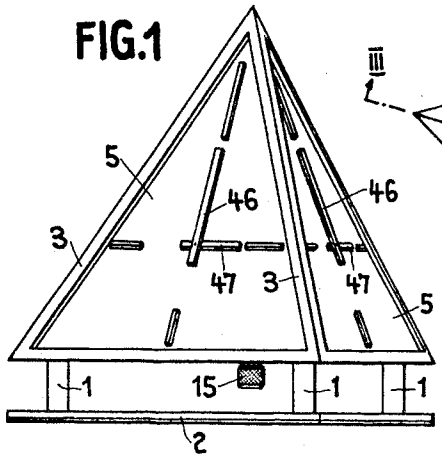

FIG.2

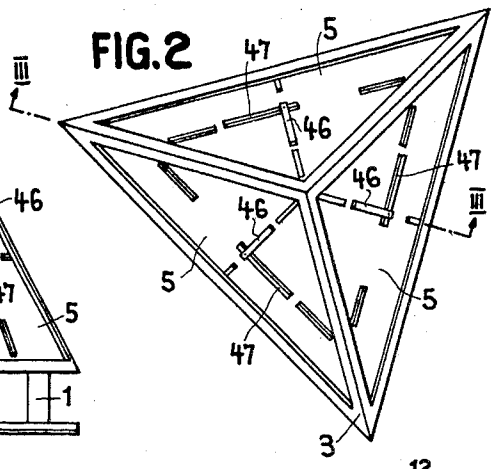

FIG.4

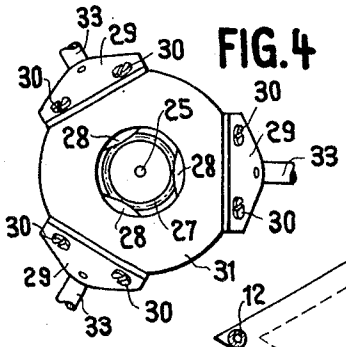

FIG.5

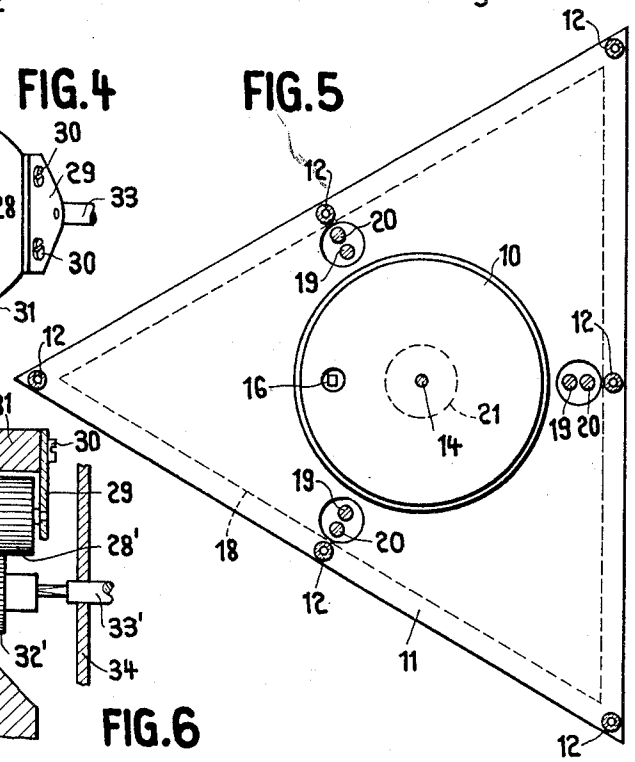

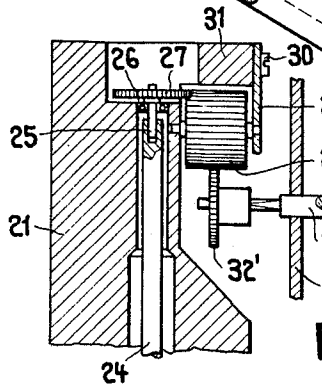

FIG.6

INVENTOR
Georges Ducommun
BY Imirie & Smiley
ATTORNEYS

Oct. 15, 1963 G. DUCOMMUN 3,106,817

CLOCK WITH SEVERAL DIALS

Filed May 29, 1961 2 Sheets-Sheet 2

FIG.3

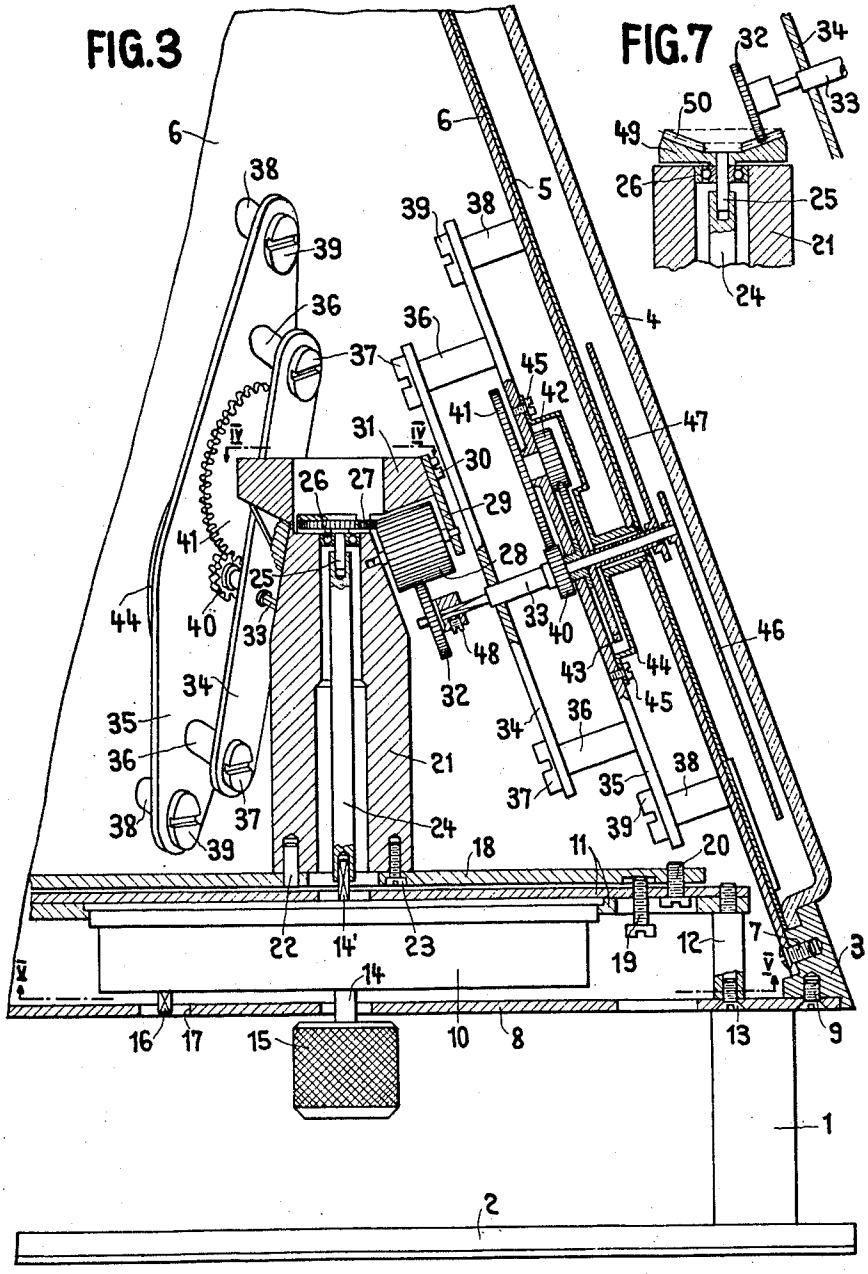

FIG.7

INVENTOR
Georges Ducommun
BY Innocie & Smiley
ATTORNEYS

United States Patent Office 3,106,817 Patented Oct. 15, 1963

3,106,817

CLOCK WITH SEVERAL DIALS

Georges Ducommun, Grenchen, Switzerland, assignor to Baumgartner Freres S.A., Grenchen, Switzerland

Filed May 29, 1961, Ser. No. 125,613
Claims priority, application Switzerland June 30, 1960
7 Claims. (Cl. 58—2)

Object of the present invention is a timepiece or watch with several dials.

The timepiece according to the invention is characterized in that it comprises one single movement rotating a shaft carrying a toothed wheel in engagement with several toothed means whose axes form an angle with the axis of said shaft, each of the said toothed means driving a minute shaft operating time indicating means associated with one of said dials.

The accompanying drawings illustrate, by way of example, one embodiment of the invention and two modifications thereof.

FIG. 1 is the side view of the embodiment.

FIG. 2 is a plan view thereof.

FIG. 3 is a sectional view along the line III—III of FIG. 2, on a larger scale.

FIG. 4 is a view along the line IV—IV of FIG. 3.

FIG. 5 is a partially sectional view along the line V—V of FIG. 3, on a reduced scale.

FIG. 6 is a sectional view of the first modification, on the same scale as FIG. 3.

FIG. 7 is an analogous sectional view of the second modification.

The clock as illustrated in the drawings is in the shape of a triangular pyramid resting by means of three posts 1 on a base 2. The clock comprises a casing 3 having three openings wherein glasses 4 are adjusted. Under each glass 4 there is disposed a dial 5 rigidly fixed to a plate 6 mounted on the casing by means of screws 7 (FIG. 3). The casing 3 is closed at its lower portion by a bottom 8 held by means of screws 9.

The clock has one single movement schematically shown as at 10 (FIG. 3). This movement is fastened to a plate 11 resting on studs 12 and fixed to the bottom 8 by means of screws 13. The movement 10 may be of any suitable type, mechanical or electrical, and does not show any particularity except that its large driving wheel is mounted with friction coupling seat on a shaft 14 projecting from both end faces of the movement 10 (FIG. 3), the upper end of the shaft 14 forming a square 14'. The shaft 14 constituting the driving wheel arbor for minute work carries on its lower end a knurled knob 15 serving for setting the hands of the clock. In the illustrated example of performance the movement 10 is of mechanical construction and comprises a shaft ending in a square 16 for winding up the mainspring by means of a key to be introduced through the opening 17 of the bottom 8.

Above the plate 11 there is disposed a second plate 18. The two plates 11 and 18 have the same triangular shape, the plate 18 being somewhat smaller than the plate 11. The plates 11 and 18 are fixed to each other in an adjustable manner by means of three pairs of screws 19 and 20 (FIGS. 3 and 5). As is especially shown in FIG. 3, the screw 19 of each pair allows the plate 18 to be lifted, while the screw 20 blocks the plate 18 in the position once occupied. The purpose of the screws 19 and 20 will be described later on.

A tube 21 having a rather thick wall is fixed to the plate 18 by means of feet 22 and screws 23. A shaft 24 goes through the tube 21, the lower end of the shaft 24 being adjusted on the square 14', while its upper end carries a pin 25 pivoted on a ball bearing 26 and ending

in a toothed wheel 27 lying in a horizontal plane, i.e., parallel to the plane of the movement 10. The wheel 27 meshes simultaneously with three pinions 28 with inclined axes, the pinions 28 being pivoted on the tube 21 and on plates 29 fixed by means of screws 30 to an upper widened portion 31 of the tube 21. Each of the pinions 28 has a certain axial length which will be useful for a purpose described later on. Each pinion 28 is in engagement with a toothed wheel 32 keyed to the inner end of a shaft 33 perpendicular to the corresponding dial 5. The gear ratio between the wheel 27 and each of the pinions 28 is 1:1 as well as the ratio between the pinions 28 and the wheels 32, so that each of the shafts 33 constitutes again a driving wheel arbor for minute work or minute shaft and makes one revolution in an hour. Each shaft 33 is pivoted in two bridges 34 and 35, the bridge 34 being held at a distance from the bridge 35 by means of studs 36 and fixed by means of screws 37; in a similar way the bridge 35 is held at a distance from the plate 6 by means of studs 38 and fixed by means of screws 39.

There will now be described the operation of the time indicating means associated with one of the dials 5 (the one shown on the right side of FIG. 3). However, it is understood that the construction is quite the same for the time indicating means associated with the other dials.

To the shaft 33 there is keyed a pinion 40 constituting a cannon pinion. The pinion 40 is in mesh with a minute wheel 41 integral with a minute pinion 42 engaging the hour wheel 43. The wheel 41 and the pinion 42 both keyed to a common axle are disposed at opposite sides of the bridge 35. A dustproof cap 44 is fixed to the bridge 35 by means of screws 45. A minute hand 46 is fixed to the outer end of the shaft 33, while an hour hand 47 is carried by the tube of the hour wheel 43.

When the movement 10 is in operation the shaft 14 is rotated and transmits its rotary movement to the shaft 24 and the toothed wheel 27, so that the latter drives at the same time all the three pinions 28. These pinions 28 drive the toothed wheels 32 and the shafts 33 which, as already said, make one revolution in an hour. By the minute wheel 41 and its pinion 42 the hour hand 47 is rotated at the desired speed of one revolution in twelve hours.

Due to the described and illustrated disposition the time is indicated simultaneously on all the three dials 5. The number of dials may be different from three. Due to the fact that the pinions 28 have a certain axial length the place of engagement of a wheel 32 with its pinion 28 may be varied in order to obtain an accurate engagement even if the distance between a dial 5 and the shaft 24 is not entirely equal to the corresponding distances of the other dials of the clock. A setscrew 48 allows of adjusting the said place of engagement to come into the middle of the axial length of the pinions 28.

It is also possible to vary the working depth between the pinions 28 and the wheels 32 by operating the screws 19 and 20 in order to lift the plate 18 more or less away from the plate 11 whereby also the tube 21 and the pinions 28 are lifted. Moreover, by lifting the plate 18 more on the one side than on the other side the working depth of a certain pair of toothed means 28, 32 can be adjusted individually.

By operating the knurled knob 15 the hands of all the three pairs may be reset in one operation due to the friction occurring between the large driving wheel (not shown) of the movement 10 and the shaft 14.

In the embodiment described above, the dials 5 are inclined and the axes of the pinions 28 form an obtuse angle with the axis of the shaft 24. In the modification as partially illustrated in FIG. 6 the axes of the pinions 28' (of which only one is shown in FIG. 6) form a right

angle with the axis of the shaft 24, these pinions being pivoted on the tube 21 and on the plates 29. Each pinion 28' is in mesh with a toothed wheel 32' keyed to the inner end of a driving wheel arbor 33'. The dial (not shown) belonging to the arbor 33' is vertical, which corresponds to the case of a prismatic clock. The operation of the hands of each dial is obtained in the same manner as described with regard to FIG. 3. Also in this modification, the actual length of the pinions 28' is chosen in such a way that the place of engagement between the wheel 32' and the pinion 28' can be adjusted for correcting the differences in the distance between each dial and the shaft 24.

In the modification illustrated in FIG. 7 the shaft 25 carries a toothed wheel 49 having a crown or lateral toothing 50 slightly inclined towards the inside, the said toothing 50 meshing directly with the toothed wheels 32 keyed to the driving wheel arbors 33. In this modification the tube 21 is shorter than in the performance shown in FIG. 3. The number of component parts is reduced and the assembling facilitated.

While I have described and illustrated one embodiment of my invention and two modifications thereof, I do not wish to limit the scope of my invention thereto but reserve the right to make such further modifications and rearrangements of the several parts as may come within the purview of the appended claims.

I claim:

1. In a clock with a plurality of dials and a single movement, a tubular support member, means for adjusting the position and inclination of said support member with respect to said movement, a drive shaft driven by said movement and extending along and for substantially the length of the bore of said support member, toothed means rotatably mounted on said support member connected to and driven by said drive shaft, a plurality of minute shafts, the axes of said minute shafts forming an angle with said drive shaft, time indicating means associated with each of said dials and driven by said minute shafts, toothed wheels mounted on said minute shafts in mesh with said toothed means, said toothed means having teeth whose length transversely of the pitch is a multiple of the axial length of the teeth of said toothed wheels, and adjusting means for allowing axial adjustment of said toothed wheels along said minute shafts, said means for

adjusting the position and inclination of said support member and said adjusting means for allowing axial adjustment of said toothed wheels permitting adjustments for correct driving of all of said minute shafts.

2. A clock as claimed in claim 1, wherein said toothed means is connected to said drive shaft by a single toothed wheel in mesh with said toothed means and keyed to the drive shaft.

3. A clock as claimed in claim 1, wherein said toothed means comprises a crown wheel keyed to said drive shaft.

4. A clock according to claim 1 wherein said means for adjusting the position and inclination of said support member comprises a plate to which said movement is secured, a second plate substantially parallel to the first plate to which said support member is fixed in substantially perpendicular relation, and screw means spaced angularly about said support member adjustably securing said first and second plates to each other so that the spacing therebetween may be varied at the separate locations of said screw means.

5. A clock according to claim 4 wherein said first and second plates are substantially equal and coincident triangles, said screw means adjustably securing the said plates being located near the apexes of the triangles.

6. A clock according to claim 1 wherein said tubular support member is formed with at least one cut-out portion in its wall open to the exterior, a plate member fixed to said support member to overlie a part of said cut-out portion, said toothed means being mounted for rotation in said cut-out portion on an axle journaled in said cut-out portion of the wall and in said plate member.

7. A clock according to claim 6 wherein the axle of said toothed means is disposed at an obtuse angle to the bore of said support member.

References Cited in the file of this patent

UNITED STATES PATENTS

1,911,601	Boughton	May 30, 1933
2,640,371	Rosenleaf	June 2, 1953

FOREIGN PATENTS

17,929	France (1st addition to No. 450,936)	Oct. 13, 1913
162,518	France	June 3, 1884
13,765	Great Britain	of 1884