July 21, 1970 G. V. LENAERTS ET AL 3,521,221

INSULATION SLICING CONNECTOR

Filed Feb. 21, 1968

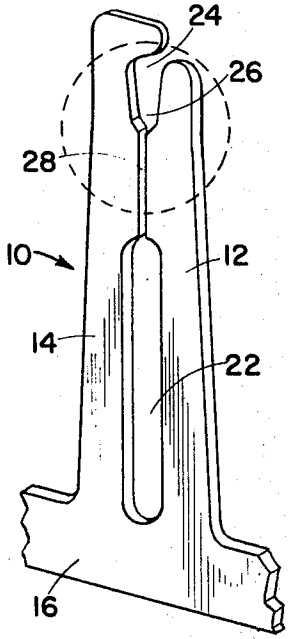

FIG. 1

FIG. 1a

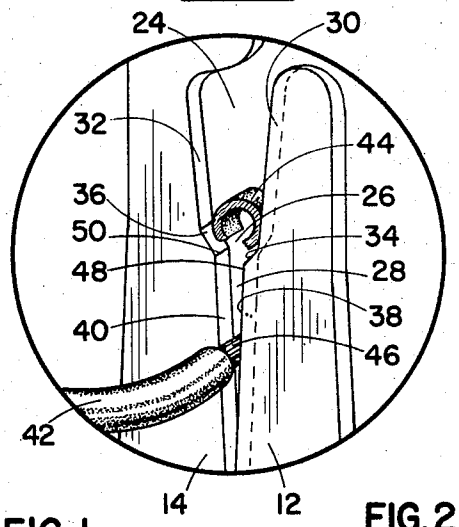

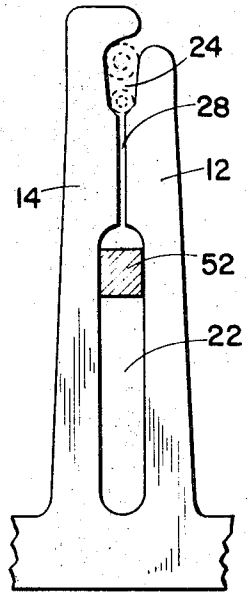

FIG. 2

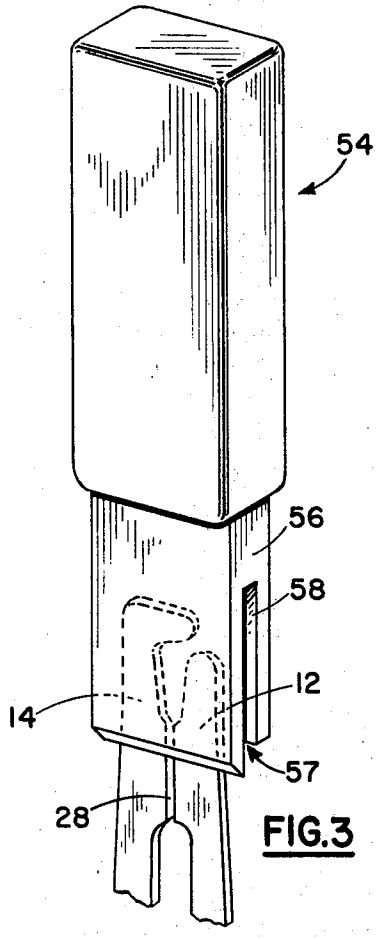

FIG. 3

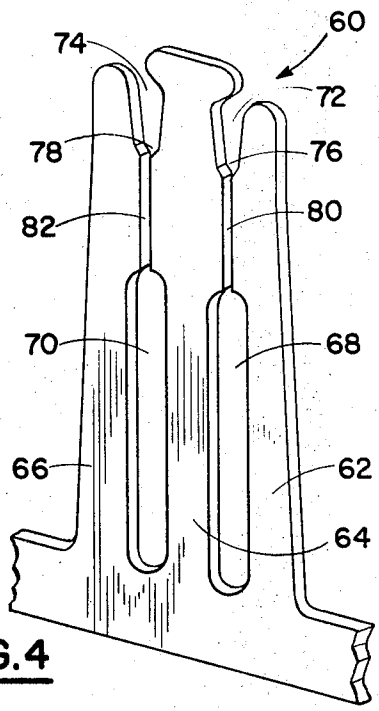

FIG. 4

INVENTORS
G.V. LENAERTS
F. R. CAMPBELL
AGENTS
Curphey & Erickson

United States Patent Office 3,521,221
Patented July 21, 1970

3,521,221

INSULATION SLICING CONNECTOR

George V. Lenaerts, London, Ontario, and Frank R. Campbell, Ottawa, Ontario, Canada, assignors to Northern Electric Company Limited, Montreal, Quebec, Canada

Filed Feb. 21, 1968, Ser. No. 707,066
Int. Cl. H01r 11/20
U.S. Cl. 339—97 16 Claims

ABSTRACT OF THE DISCLOSURE

An insulation-slicing connector having a pair of adjacent legs having facing edges forming sidewalls of a conductor-receiving passageway consisting of three portions: an entrance portion, a conductor-centering portion and a conductor-gripping portion. The sidewalls of the conductor-centering portion intersect the sidewalls of the conductor-gripping portion to form opposed edges for slicing the insulation from the insulated conductor as it is forced into the conductor-gripping portion.

This invention relates to a connector for mechanically retaining and electrically contacting insulated conductors, and to a method of making such connector. More particularly, this invention relates to an insulation-slicing and conductor-retaining connector for connecting insulated conductors without first removing the insulation therefrom.

Quick-connect clip-type terminals or connectors were devised (see U.S. Pat. No. 3,112,147 issued Nov. 26, 1963, to W. Pferd, K. H. Pohl, and D. W. Tyler) to circumvent previous wire connecting operations which required the time-consuming and costly tasks of skinning, placing and connecting. In the telephone industry, for example, millions of wire terminations are made each year and, with the advent of new business telephones, there has been a rapid increase in number of more complex installations and additions to service. This increasing task of installing and rearranging, measured both in charges and in time on customer premises, has clearly established the need for terminals that would significantly reduce this effort and expedite the provision of the telephone service.

Prior to the present invention, connectors of the type disclosed in the aforesaid patent were made from a flat strip of electrically conductive resilient material in which a slit was sheared to form two elongated adjacent legs. A connection was made by forcing an unskinned insulated conductor between the legs of the connector, usually with the help of a special hand tool (see Bell Laboratories Record, June 1962, pages 202 to 207). This imposed a crushing and rubbing action on the insulation which bared the conductor for electrical contact with the legs of the connector. The connector was normally intended to accommodate the different sizes of conductors commonly used in the telephone industry, i.e., 19 to 26 AWG, and to be re-usable for any conductor within the range regardless of the size of the previous conductor. However, the larger conductors often forced the legs of the connector apart to the point where the elastic limit of the material of the connector was exceeded. This usually resulted in incomplete removal of the insulation and improper or no electrical contact. Furthermore, the connector could not be re-used, particularly for smaller conductors, because of the residual deformation remaining after being overstressed. This necessitated using a hand tool which would restrict the outward movement of the legs of the connector. However, the advent of tougher insulating materials which were much more difficult to penetrate or remove aggravated the situation and in some cases necessitated preskinning the conductors, thus defeating one of the main purposes of the connector.

The present invention overcomes the above disadvantages by providing a simple clip-type connector which will penetrate insulating materials much more effectively than the prior art connectors and will therefore facilitate reliable connections with the different sizes of insulated conductors without first removing the insulation therefrom.

The present invention provides an insulation-slicing connector for insulated electrical conductors which comprises, in its broadest aspect, a flat sheet of electrically or conductive material having a base portion and a pair of adjacent leg portions integral with the base portion and having facing edges forming sidewalls of a conductor-receiving passageway; the passageway consists of an entrance portion remote from the base portion for receiving an insulated conductor, a conductor-gripping portion and a tapered conductor-centering portion interconnecting the entrance and conductor-gripping portions; the sidewalls of the conductor-centering portion intersect the sidewalls of the conductor-gripping portion to form opposed edges for slicing the insulation from the insulated conductor as it is forced into the conductor-gripping portion.

Thus, by providing a clip-type connector with a configuration in accordance with the present invention, the removal of insulating material as a conductor is forced between the legs of the connector is greatly facilitated through a cutting action as opposed to the crushing and rubbing action inherent in the connectors of the prior art. And, as a further and quite beneficial advantage, the forces exerted by the connector of the present invention in removing insulation are generally lengthwise of the legs such that the components of the forces acting transversely of the legs which tend to separate them are minimal.

The present invention also provides a new method of making an insulation-slicing connector. Because the conductor-gripping portion is usually formed by a shearing operation, it is necessary to spread the legs apart slightly to permit plating of the facing edges of the legs for corrosion and abrasion resistance. One prior method as disclosed in U.S. Pat. 3,234,498, issued Feb. 8, 1966, to A. Logan, was to swage a pair of opposing projections on the inside edges of the legs to hold them apart. According to the method of the present invention, the legs are spread apart prior to plating sufficiently to overstress the material of the connector i.e., to exceed its elastic limit, such that a gap is left between the legs due to residual deformation. This has the advantage of increasing the elastic limit due to strain hardening to reduce the chance of further overstressing during use, and further that the "memory" of the material will tend to return the legs to their original positions thus sustaining the grip on a conductor lodged therebetween.

The present invention therefore provides a method of making an insulation penetrating connector for inuslated electrical conductors which comprises, in its broadest aspect, the steps of forming from a flat sheet of electrically conductive material a connector having a base portion and a pair of adjacent leg portions having facing edges forming sidewalls of a conductor-receiving passageway having a conductor-gripping portion, and spreading the leg portions apart in the plane of the sheet to plastically deform the leg portions to provide a spacing between the sidewalls of the passageway at the conductor-gripping portion.

In order that the invention may be readily understood, preferred embodiments thereof will now be described, by way of example, with reference to the accompanying drawing in which:

FIG. 1 is a perspective view of one embodiment of an

insulation-slicing connector according to the present invention;

FIG. 1*a* is an enlarged view of the area within the broken line circle of FIG. 1 and further showing a conductor being retained in the connector with the insulation having been removed therefrom;

FIG. 2 is an elevational view of the connector of FIG. 1 showing in broken lines two insulated conductors of different size positioned in the entrance portion of the connector;

FIG. 3 shows a perspective view of a hand tool which is used to force a conductor into the connector of the present invention; and

FIG. 4 is a perspective view of another embodiment of an insulation-slicing connector according to the present invention.

The embodiment illustrated in FIG. 1 of the drawings represents an insulation-slicing and conductor-retaining connector **10** made of a flat sheet of electrically conductive material. The connector is normally one of a plurality of similar connectors joined together at their base portions and for this reason is shown broken away at the base portion.

The connector **10** consists of two adjacent leg portions **12** and **14** integral at one end thereof with base portion **16** and free at their other ends. Both free ends are rounded while one end is longer than and partially extends over the other free end; the roundness of the ends and the partial extension of one leg over the other leg cooperate in greatly facilitating the passage and the positioning of an insulated conductor between the leg portions of the connector. The facing edges of adjacent leg portions **12** and **14** define a slot **22** and a conductor-receiving passageway consisting of an entrance portion **24**, a conductor-centering portion **26** and a conductor-gripping portion **28**.

Referring to FIG. 1*a*, the entrance portion **24** of the passageway is defined by converging sidewalls **30** and **32** and the conductor-centering portion **26** is defined by sidewalls **34** and **36** which also converge but more rapidly than sidewalls **30** and **32**. The conductor-gripping portion **28** has relatively parallel sidewalls **38** and **40**. The amount of taper of the entrance portion **24** is determined by the range of sizes of conductors that the connector is designed to handle. The connector as applied to the telephone industry would be expected to accommodate at least conductors in the range of 19 to 26 AWG. As illustrated in FIG. 2, the distance between sidewalls **30** and **32** at the top end of entrance portion **24** is at least equal to the diameter over insulation of the largest insulated conductor while the width of the entrance portion at the bottom end is at least equal to the diameter over insulation of the smallest insulated conductor. It is evident that if only one size of conductor were to be used, walls **30** and **32** could be parallel to form a straight channel wide enough to suit the outside diameter of the insulated conductor.

FIG. 1*a* shows a conductor **42** inserted in the conductor-gripping portion **28**. A portion **44** of the insulation has been removed leaving the bare wire **46** in contact with walls **38** and **40** thereof. These walls define a straight slit having a separation of slightly less than the diameter of the smallest wire to be used with the connector so that as the wire is inserted it will rub against the sidewalls **38** and **40** to remove any oxide films or contaminants present on the bare wire or the sidewalls, and will remain firmly gripped between the leg portions **12** and **14**.

Rapidly converging sidewalls **34** and **36** intersect substantially parallel sidewalls **38** and **40** respectively to form a pair of abrupt edges **48** and **50** on the connector legs. These edges **48** and **50** act as cutters to slice the portion **44** of the insulation cleanly from the conductor to expose the wire **46** to be gripped between sidewalls **38** and **40** of the conductor gripping portion **28**. This slicing action is enhanced by the centering effect of the convergent sidewalls **34** and **36** which insure that the conductor is guided toward the cutting edges **48** and **50** as the insulation is sliced away for smooth entry into the conductor-gripping portion **28**. To provide edges **48** and **50** with optimum trenchancy, the included angle formed by sidewalls **34** and **36** should be at least 90°, preferably from about 90° to about 120°.

The separation between sidewalls **38** and **40** (which facilitates plating the connector as will be described hereinafter), and more particularly between edges **48** and **50**, is such that the edges not only expose the wire **26** by slicing away the insulation as shown in FIG. 1*a* but also shave a small amount of metal from the wire to remove any oxides or other contaminants that would interfere with the electrical connection, and to insure that the wire is firmly gripped between the leg portions **12** and **14**. In connectors of this invention intended for use with a range of conductor sizes, the distance between the sidewalls **38** and **40** is set to accommodate the smallest conductor of the range. The larger insulated conductors when forced to the bottom of the tapered entrance portion **24**, bear against the converging sidewalls **30** and **32** to spread the leg portions **12** and **14** apart slightly and thus increase the distance between edges **48** and **50** and sidewalls **38** and **40** in the conductor-gripping portion **28** to suit the larger wires. This increased separation between the leg portions of the connector is minimal and within the elastic limit of the material of the connector, meaning that if the conductor were subsequently removed, the leg portions **12** and **14** would return to the original spacing. The geometry of the situation is such that the edges **48** and **50** cut a little deeper into the larger conductors than the smaller ones which reduces the amount of leg separation over the prior art connectors. Thus, the hazard of residual deformation which was so prevalent with connectors of the prior art and which effectively rendered them useless unless special precautions were taken, is not a problem with the connectors of the present invention.

As mentioned hereinabove, another purpose for separating the sidewalls **38** and **40** is to facilitate plating them, and the rest of the connector, with a coating of tin or the like to prevent corrosion and thus maintain the electrical reliability of the connections, and to provide wear resistance to minimize damage to sidewalls **38** and **40** when a wire is forced between them so that the same connector can be used for repeated connections. In prior connectors, the leg portions were oppositely swaged at the conductor-gripping portion to form opposed projections on the sidewalls which kept the sidewalls from touching. According to the present invention, the leg portions **12** and **14** are initially spread apart as shown in FIG. 2 by a tapered punch or wedge **52** in slot **22** so as to exceed the elastic limit of the connector material by a predetermined amount so that upon removal of the wedge **52** there is a residual deformation of the leg portions which separates the sidewalls **38** and **40** by the desired amount referred to hereinbefore. Material which has been deformed in this manner by over-stressing has a "memory" or tendency to return to its original, undeformed state over a period of time. In the case of the present connector this "memory" sustains the force with which a conductor is gripped between the leg portions thus maintaining and even improving the electrical connection. The prior connectors were incapable of this advantage because the leg portions were held apart physically by the abutting swaged projections on the sidewalls of the conductor-gripping portion.

FIG. 3 shows a hand tool **54** for forcing an insulated conductor into the conductor-gripping portion **28**. The bottom portion **56** of the tool has a slot **57** which receives connector legs **12** and **14**. The slot has an opening **58** on each side thereof. The present hand tool is different from the hand tool described in the above-mentioned Bell Laboratories Record in that openings **58** are now possible since the forces now acting on the conductor as the insulation is sliced therefrom are generally lengthwise and the components of the forces acting transversely of

the legs which tend to separate them are minimal. Since unwanted plastic deformation of the leg portions is not a problem with connectors of the present invention, restraining sidewalls are not necessary on the hand tool.

Because the hand tool **54** is provided with openings **58**, a three-legged connector **60** shown in FIG. 4, has been devised where the aforesaid hand tool is used to make a connection. The connector **60** consists of three coplanar leg portions **62**, **64** and **66** defining two slots **68** and **70**, two entrance portions **72** and **74**, two conductor-centering portions **76** and **78** and two conductor-gripping portions **80** and **82**. The sidewalls of each conductor-receiving passageway of connector **60** are structurally and functionally identical to those of connector **10** of FIGS. 1–3.

In effecting a connection with the connector of the present invention, an insulated conductor is first positioned by hand in the entrance portion **24** of the connector **10** and is then pushed down between the legs **12** and **14** by means of hand tool **54**. As the insulated conductor is pushed further into the entrance portion **24**, it bears against sidewalls **30** and **32** gradually spreading legs **12** and **14** apart. After the conductor reaches the bottom of portion **24**, the converging sidewalls **34** and **36** cooperate to guide the conductor to the cutting edges **48** and **50**. As the insulated conductor is forced toward the conductor-gripping portion **28** edges **48** and **50** slice a portion of the insulation from the conductor leaving a bare contact area of conductive material which scrapes against sidewalls **38** and **40** as it is moved into a tightly gripped position between these sidewalls for electrical contact.

The following example is given by way of illustration and is not a limitation unless otherwise noted in the appended claims.

In accordance with the present invention, an insulation-slicing connector designed for insulated conductors ranging from 19 AWG to 26 AWG has been made from a flat sheet of steel having a thickness of .036" and a minimum tensile strength of 130,000 pounds per square inch. The entrance portion tapered from a width of 0.060" at the top to .027" at the bottom. The included angle of the conductor-centering portion was 120° and the free space between the sidewalls **38** and **40** of the conductor-gripping portion **28** was between .006" and .008".

The connector was plated first with 0.0005 inch of copper and then 0.0002 inch of bright tin using an acid base. This combination resulted in a non-porous surface, thus eliminating the pin hole effect often present on prior clips. The finished connector was then annealed at 400° F. for four hours to prevent whisker growth.

What we claim is:

1. An insulation-slicing connector for insulated electrical conductors comprising a flat sheet of electrically conductive material having

(1) a base portion, and

(2) a pair of adjacent leg portions integral with the base portion and having facing edges forming sidewalls of a conductor receiving passageway comprising

(a) an entrance portion remote from the base portion for receiving an insulated conductor,

(b) a conductor-gripping portion, and

(c) a tapered conductor-centering portion interconnecting the entrance and conductor-gripping portions,

the sidewalls of the conductor-centering portion intersecting the sidewalls of the conductor-gripping portion at an abrupt angle to form opposed edges for slicing the insulation from the insulated conductor as it is forced into the conductor gripping portion.

2. An insulation-slicing connector as defined in claim **1** wherein the sidewalls of the conductor-gripping portion are spaced apart a distance slightly less than the diameter of the conductor, and the sidewalls of the entrance portion adjacent the conductor-centering portion are spaced apart by a distance at least equal to the diameter over insulation of the insulated conductor.

3. An insulation-slicing connector as defined in claim **1** for insulated electrical conductors of different diameters, the entrance portion being tapered with the sidewalls thereof converging toward the conductor-centering portion, the distance between the sidewalls of the entrance portion being at least equal to the diameter over insulation of the smallest insulated conductor adjacent the conductor-centering portion and being at least equal to the diameter over insulation of the largest insulated conductor remote from the conductor-centering portion, the sidewalls of the conductor-gripping portion being spaced apart a distance slightly less than the diameter of the smallest conductor.

4. An insulation-slicing connector as defined in claim **1** wherein the sidewalls of the conductor-gripping portion are spaced from each other by plastic deformation of the leg portions in opposite directions.

5. An insulation-slicing connector as defined in claim **1**, the tapered conductor-centering portion having a minimum included angle of about 90°.

6. An insulation-slicing connector as defined in claim **5** wherein said included angle is from about 90° to about 120° inclusive.

7. An insulation-slicing connector as defined in claim **6** wherein the sidewalls of the conductor-gripping portion are spaced apart a distance slightly less than the diameter of the conductor, and the sidewalls of the entrance portion adjacent the conductor-centering portion are spaced apart by a distance at least equal to the diameter over insulation of the insulated conductor.

8. An insulation-slicing connector as defined in claim **6** for insulated electrical conductors of different diameters, the entrance portion being tapered with the sidewalls thereof converging toward the conductor-centering portion, the distance between the sidewalls of the entrance portion being at least equal to the diameter over insulation of the smallest insulated conductor adjacent the conductor-centering portion and being at least equal to the diameter over insulation of the largest insulated conductor remote from the conductor-centering portion, the sidewalls of the conductor-gripping portion being spaced apart a distance slightly less than the diameter of the smallest conductor.

9. An insulation-slicing connector as defined in claim **8** wherein the leg portions are plastically deformed in opposite directions prior to the insertion of an electrical conductor to space the sidewalls of the conductor-gripping portion from each other.

10. An insulation slicing connector as defined in claim **9** wherein the material of the connector has a minimum tensile strength of about 130,000 pounds per square inch.

11. An insulation-slicing connector as defined in claim **10** wherein the material of the connector is steel, and said connector further includes an outer wear and corrosion-resistance coating comprising a 0.0005 inch thick layer of copper on the steel and a 0.0002 inch thick layer of bright tin on the copper layer.

12. An insulation-slicing connector for insulated electrical conductors comprising a flat sheet of electrically conductive material having

(1) a base portion, and

(2) three coplanar leg portions integral with the base portion, said leg portions consisting of a middle leg portion interposed between two outer leg portions, the middle leg portion and each of the outer leg portions having facing edges forming sidewalls of a conductor-receiving passageway, having

(a) an entrance portion remote from the base portion for receiving an insulated conductor,

(b) a conductor-gripping portion, and

(c) a tapered conductor-centering portion interconnecting the entrance and conductor-gripping portions,

the sidewalls of the conductor-centering portion intersecting the sidewalls of the conductor-gripping portion at an abrupt angle to form opposed edges for slicing the insulation from the insulated conductor as it is forced into the conductor-gripping portion.

13. An insulation-slicing connector as defined in claim 12 in which the tapered conductor-centering portion has an included angle of about 90° to about 120°.

14. An insulation-slicing connector as defined in claim 13 for insulated electrical conductors of different diameters, the entrance portion being tapered with the sidewalls thereof converging toward the conductor-centering portion, the distance between the sidewalls of the entrance portion being at least equal to the diameter over insulation of the smallest insulated conductor adjacent the conductor-centering portion and being at least equal to the diameter over insulation of the largest insulated conductor remote from the conductor-centering portion, the sidewalls of the conductor-gripping portion being spaced apart a distance slightly less than the diameter of the smallest conductor.

15. An insulation-slicing connector as defined in claim 14 wherein each outer leg portion is plastically deformed away from the middle leg portion to space the sidewalls of the conductor-gripping portion formed between that outer leg portion and the middle leg portion.

16. An insulation-slicing connector for an insulated electrical conductor comprising:

a pair of electrically conductive adjacent leg portions

joined together at one end and having facing edges forming side walls of a conductor receiving passageway;

said passageway comprising:

a tapered conductor-centering portion remote from said one end, and

a conductor gripping portion;

the side walls of the conductor-centering portion intersecting the sidewalls of the conductor-gripping portion at an abrupt angle to form opposing edges for slicing the insulation from the insulated conductor as it is forced into the conductor-gripping portion.

References Cited

UNITED STATES PATENTS

2,192,751	3/1940	Melchior et al.	29—155.55
2,476,886	7/1949	Miller et al.	
2,694,189	11/1954	Wirsching	339—97
3,027,536	3/1962	Pasternak	339—97
3,234,498	2/1966	Logan.	
2,333,266	11/1943	Miller	339—97
3,167,375	1/1965	Sarazen	339—99

MARVIN A. CHAMPION, Primary Examiner

J. H. McGLYNN, Assisant Examiner

U.S. Cl. X.R.

339—278