(12) INTERNATIONAL APPLICATION PUBLISHED UNDER THE PATENT COOPERATION TREATY (PCT)

(19) World Intellectual Property Organization
International Bureau

(43) International Publication Date
13 February 2025 (13.02.2025)

WIPO | PCT

(10) International Publication Number
WO 2025/032371 A1

(51) International Patent Classification:
A61B 5/24 (2021.01) *A61B 5/318* (2021.01)

(21) International Application Number:
PCT/IB2023/063227

(22) International Filing Date:
26 December 2023 (26.12.2023)

(25) Filing Language: English

(26) Publication Language: English

(30) Priority Data:
140250140003003242
04 August 2023 (04.08.2023) IR

(72) Inventor; and
(71) Applicant: **NAKHOSTIN, Alireza** [IR/IR]; Neshat Street, Innovation Center of Shiraz University of Medical Sciences, Shiraz, Fars, Jahrom (IR).

(72) Inventors: **MAHYARI, Zahra**; 3d floor, Mohammad Building, 4/8th Alley, Takestan Street, Farhangshahr Blvd, Shiraz, Fars (IR). **FATEMI GHIRI, Seyed Mohammad**; Unit 113, 3rd Floor, Block 3, Plot 12, Golsar Fars Company Housing Cooperative Complex, 9/2 Zagros Alley, 7 Zagros St., New Sadra City, Phase 2, Shiraz, Fars (IR). **MOLOUDI, Mohammadjavad**; Ground floor, Plate 464, Hemti Alley, Satayesh Boulevard, Pol Satayesh neighborhood, Shiraz, Fars (IR). **RANJBAR, Mohammadreza**; Ground Floor, Yas Alley, Velayat 1/10 Alley {9 Shahid Jokar}, Vazirabad, Shiraz, Fars (IR). **TAJALIZADEH, Hadi**; Plate 446, Unit 4, 2nd Floor, 1 Shahid Hejri Alley,Vesal, Mohammad Hasan Hejri, Shahid S, Shiraz, Fars (IR). **LOLOEE JAHROMI, Ali**; Ground Floor, Bahmanzadegan Alley, Abbasi Alley, Asfariz Neighborhood, Jahrom, Fars (IR). **BAHMANPOURI, Zeinab**; 1st Floor, Gol Bahar Blvd., 4 Gol Zanbag Alley, Baharestan Town, Shiraz, Fars (IR). **ESFAHANI, Seyedhamidreza**; Arghavan Building, No. 5, 4th Negarestan Alley, Ansari Street, Alghadir Blvd, Shadabad, Tehran (IR). **FAHANDEZH SAADI, Samaneh**; 3 Shahid Ali Sharif Alley, Ahmed Bin Musa St., Shiraz, Fars (IR). **MAHYARI, Fatemeh**; 3d Floor, Mohammad Building, 4/8th Alley, Takestan Street, Farhangshahr Blvd, Shiraz, Fars (IR). **ELMAFSHAR, Reza**; The Third Door of the First Side on the Right, 1 Adib St., Farhang Shahr, Jahrom, Fars (IR). **DARNIHAMEDANI, Pourya**; Unit 251, Sayeh Complex, Baran Boulevard, Azadegan Street, Shiraz, Fars (IR). **MOAZZENJAHROMI, Mahdi**; Unit 251, Sayeh Complex, Baran Boulevard, Azadegan Street, Shiraz, Fars (IR). **LOLOEE JAHROMI, Saba**; Ground Floor, Bahmanzadegan Alley, Abbasi Alley, Asfariz Neighborhood, Jahrom, Fars (IR). **FATEMI GHIRI, Seyedeh Zahra**; Unit 113, 3rd Floor, Block 3, Plot 12, Golsar Fars Company Housing Cooperative Complex, 9/2 Zagros Alley, 7 Zagros St., New Sadra City, Phase 2, Shiraz, Fars (IR).

(81) Designated States *(unless otherwise indicated, for every kind of national protection available)*: AE, AG, AL, AM, AO, AT, AU, AZ, BA, BB, BG, BH, BN, BR, BW, BY, BZ, CA, CH, CL, CN, CO, CR, CU, CV, CZ, DE, DJ, DK, DM, DO, DZ, EC, EE, EG, ES, FI, GB, GD, GE, GH, GM, GT, HN, HR, HU, ID, IL, IN, IQ, IR, IS, IT, JM, JO, JP, KE, KG, KH, KN, KP, KR, KW, KZ, LA, LC, LK, LR, LS, LU, LY, MA, MD, MG, MK, MN, MU, MW, MX, MY, MZ, NA, NG, NI, NO, NZ, OM, PA, PE, PG, PH, PL, PT, QA, RO, RS, RU, RW, SA, SC, SD, SE, SG, SK, SL, ST, SV, SY, TH, TJ, TM, TN, TR, TT, TZ, UA, UG, US, UZ, VC, VN, WS, ZA, ZM, ZW.

(84) Designated States *(unless otherwise indicated, for every kind of regional protection available)*: ARIPO (BW, CV, GH, GM, KE, LR, LS, MW, MZ, NA, RW, SC, SD, SL, ST, SZ, TZ, UG, ZM, ZW), Eurasian (AM, AZ, BY, KG, KZ, RU, TJ, TM), European (AL, AT, BE, BG, CH, CY, CZ, DE, DK, EE, ES, FI, FR, GB, GR, HR, HU, IE, IS, IT, LT, LU, LV, MC, ME, MK, MT, NL, NO, PL, PT, RO, RS, SE,

(54) Title: WIRELESS AND PAIRED ECG ELECTRODES

(57) Abstract: The initial 50 Hz frequency noise in heart signals poses a significant challenge in current electrocardiogram (ECG) devices, prompting the use of differential and low-noise amplifiers for signal reception. These devices typically employ 1 to 8 signal receiving channels with corresponding differential amplifiers at their input. However, the reliance on the differential nature of this setup mandates simultaneous signal reception from two electrodes attached to the body, necessitating cable connectivity for reliable signal capture. In our novel design, a departure from the conventional differential amplifier is made in favor of a non-differential amplifier. Leveraging independent electrodes, signals from various body regions are received and transmitted autonomously to the central device, circumventing the limitations imposed by the cable-based approach. To counteract the heightened noise resulting from removing the differential amplifier, sophisticated digital filtering within the hardware and precise processing algorithms have been employed. By utilizing autonomous hardware electrodes and implementing a differential amplifier's functionality within the microcontroller's software model, we've successfully eradicated the need for interface cables between body electrodes and the central device. Effectively acting as interconnected independent electrodes through a central hub, this innovation eliminates the dependence on consumable cables and interfaces, presenting a transformative leap from conventional electrode connections to the central device.

WO 2025/032371 A1

[Continued on next page]

SI, SK, SM, TR), OAPI (BF, BJ, CF, CG, CI, CM, GA, GN, GQ, GW, KM, ML, MR, NE, SN, TD, TG).

Published:

— *with international search report (Art. 21(3))*

— *in black and white; the international application as filed contained color or greyscale and is available for download from PATENTSCOPE*

Wireless and paired ECG electrodes

[1]

Technical Field

This invention is in the field of medical Device and is an electrocardiogram (ECG) that does not require lead wires, and the chest pads wirelessly and coupled collect ECG signals.

Background Art

[2] The past decade has seen diverse types of electrocardiogram (ECG) devices used by healthcare providers and physicians for monitoring cardiac signals. The most recent innovations in this domain are wireless and AI-based ECG devices. Notably, several inventions include:

1. Patent number 106974638 from 2017: A device featuring an ECG signal-recording patch with wireless functionality, albeit monitoring only a single channel.

2. Patent number 202311062445 from 2023: Focusing on a Wireless Body Area Network (WBAN) and decentralized heart strip structures.

3. Patent number 202341022959 from 2023: A wireless ECG monitoring system utilizing a smart shirt for elderly patient heart monitoring, integrating AD8232 lead sensors for signal processing, and ZigBee for wireless data transmission to personal computers.

All the mentioned inventions conform to the conventional methods of ECG signal monitoring, predominantly relying on differential amplifiers and allowing display and storage of a single ECG channel in some instances. The primary distinction of our innovation lies in its utilization of a distinct hardware structure, based on non-differential amplifiers, software integration, noise elimination, and signal enhancement. This results in the elimination of interface cables between the central device and chest pads during storage and monitoring of 2, 3, 5, 8, and 12-channel ECG signals. Another advantage is its adaptability for various applications and the flexibility to modify the number of signal recording channels without necessitating hardware alterations, distinguishing our design from others in the field.

Summary of Invention

[3] The contemporary ECG devices—be they portable, non-portable, smart, or otherwise—function by connecting chest leads to the patient's skin. These leads capture the ECG signal and transmit it via wired connection to a central device.

requiring wires, pose challenges for both patients and medical staff.

Our innovation aims to eliminate these wires between chest pad and central device. With our concept, the chest pads independently capture ECG signals from the patient's body and transmit them wirelessly to the central device. This approach eradicates the need for physical wires, enhancing convenience for medical centers and patients alike. The central device integrates and processes these wireless signals, transmitting them to mobile phones, printers, or computers for display and analysis.

This invention's primary objective is to eliminate the dependency on physical lead wires between the chest leads and the central device, revolutionizing the conventional ECG system.

Technical Problem

[4] In existing devices, crucial functions such as noise reduction and signal amplification rely on hardware components. However, these devices require simultaneous signal transmission from two chest pads to the reference device for proper operation, leading to a necessity for wired connections from the patient's body to the differential amplifier in reference device.

The lead wires utilized for signal transmission are considered consumable items, contributing to substantial expenses for medical centers. Moreover, these wires pose operational challenges for both patients and medical staff during usage.

Solution to Problem

[5] The proposed solution revolutionizes the conventional approach by eliminating the dependence on lead wires. In this innovation, ECG signals are received by the chest pad directly from the patient's body and transmit these signals wirelessly to the reference device. Each chest pad independently receives the patient's signal using a differential amplifier and sends it to a reference device. Through advances in hardware and software architecture, the need for wired connections has been eliminated.

The reference device collects and processes these signals and subsequently sends them wirelessly or via wired connections to mobile phones, printers and computers for visualization and analysis.

Advantageous Effects of Invention

This innovation significantly enhances the efficiency and convenience of monitoring vital signs, particularly cardiac signals. By eliminating the need for consumable lead wires between the chest pad (electrodes) attached to the body and the electrocardiogram reference device, it streamlines and expedites the monitoring process.

Brief Description of Drawings

[6] [Fig.1] Schematic of NOD1

[7] [Fig. 2] Chest pad

[8] [Fig. 3] chest pad

[9] [Fig. 4] ADS1291 Module

[10] [Fig. 5] Microcontroller

[11] [Fig. 6] NRF module

[12] [Fig. 7] Battery

[13] [Fig. 8] Schematic of main HUB

[14] [Fig. 9] Battery

[15] [Fig. 10] Wireless module (Bluetooth / WIFI)

[16] [Fig. 11NRF module

[17] [Fig. 12] Microcontroller

[18] [Fig. 13] Wireless module (Bluetooth / WIFI)

[19] [Fig. 14] Paired ECG System

[20] [Fig. 15] body

[21] [Fig. 16] Nodes

[22] [Fig. 17] Main HUB

[23] [Fig. 18] Mobile

[24] [Fig. 19] Body of Node

[25] [Fig. 20] ON/OFF Button of Node

[26] [Fig. 21] ON/OFF LED of Node

[27] Fig. 22] Connection LED of Node

[28] [Fig. 23] main HUB body

[29] [Fig. 24] main HUB display

[30] [Fig. 25] Main HUB on/off button

[31] [Fig. 26] Charger body

[32] [Fig. 27] Pin and location of each independent lead for charging

[33] [Fig. 28] 220V charging connection and plug

[34] [Fig. 29] Location of the central hub in charging

[35] [Fig. 30] Time response of the signal without filter and with filter

[36] [Fig. 31] Frequency response of raw signal and final signal

[37] [Fig. 32] Comparison of the time signal output of the mentioned device with hospital devices

Description of Embodiments

[38] In current ECG devices, a pivotal element is the differential amplifier unit within the input signal receiving circuit, responsible for differential signal reception, initial noise removal, and signal processing. However, the present structure necessitates simultaneous signal collection from all chest pads for precise readings, posing constraints. Our proposed innovation aims to revolutionize this by enabling independent, wireless, and simultaneous signal reception from body points, a crucial factor for ensuring accurate signals.

This transformative change mandates a comprehensive hardware restructuring, integrating non-differential amplifiers, energy-efficient transmitters, and advanced software signal processing for noise reduction. The process entails electrodes (chest pads) powered by rechargeable batteries, meticulously sampling signals from the body surface under precise software control. ECG signals are directly received

by the chest pad from the patient's body and wirelessly transmitted to the reference device. Each chest pad autonomously captures the patient's signal through a non-differential amplifier and transmits to the reference device by NRF transmitter. Subsequently, these signals undergo wireless transmission to a central processing board, where integration, processing, and validation occur, yielding an accurate and validated final signal. This signal is further transmitted to mobile phones, printers, or computers through wireless or wired connections for display or printing.

The system incorporates the ADS1291 signal receiving chip and an ARM processor-based hardware-software HUB, offering versatile monitoring modes (online, offline, ECG data frame recording). Its adaptable design enables seamless integration and removal of leads, ranging from two to ten, without altering the device's physical structure, ensuring flexible and versatile monitoring capabilities. Additionally, a central charger facilitates simultaneous charging of all wireless leads and the central device within a dedicated charger box.

[39]

Industrial Applicability

This invention is used in the telehealth industry, online monitoring of vital signs and medicine and health

[40]

Claims

[Claim 1] This invention consists of independent pair and wireless electrodes for recording ECG signals without any wired interface with the central device (hub) as a collector, integrator and central processor.

[Claim 2] According to claim1, Contrary to the usual way of using a differential amplifier with a cable interface, the wireless pair electrode uses a non-differential amplifier in the hardware structure and wireless communication based on the NRF transceiver module.

[Claim 3] According to claim2, can be easily added and removed from the overall structure without changing the hardware. This flexible structure allows the device to be used in different modes of 1 channel, 3 channels, 5 channels and 8 channels.

[Claim 4] According to claim1, The HUB uses STM series ARM processor and has the task of collecting signals from independent electrodes, integrating signals, removing noise, forming a valid signal and sending the final signal to a mobile phone, computer or printer.

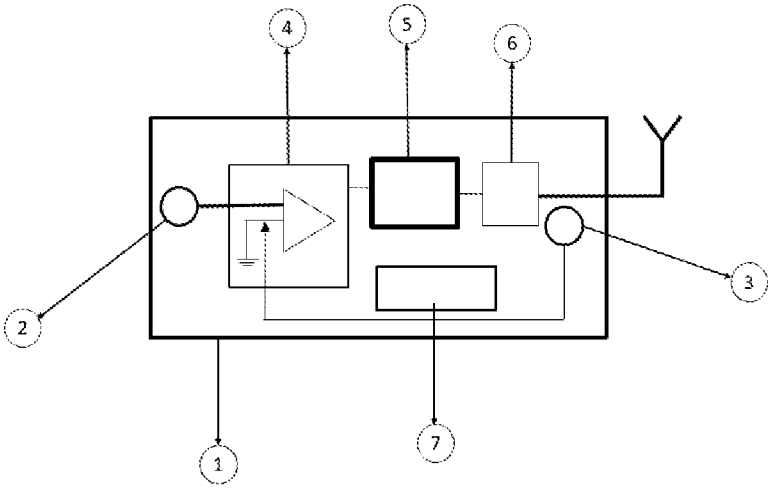
4
5
6
2
3
1
7

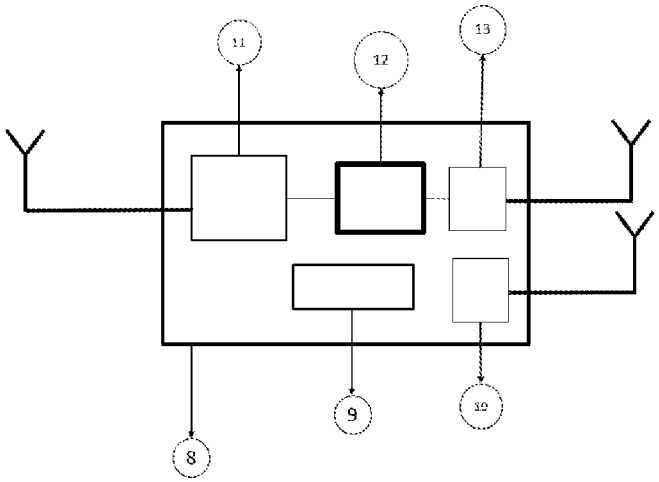
11
12
13
8
9
10

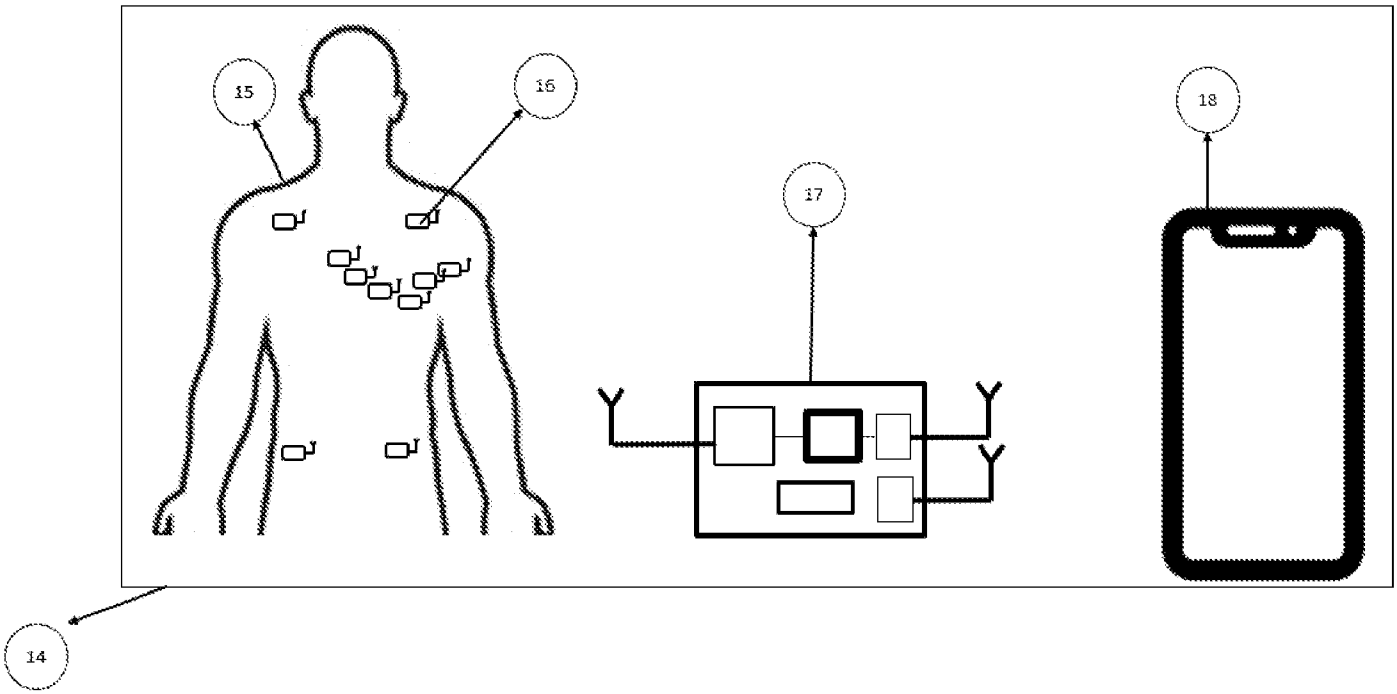
15
16
17
18
14

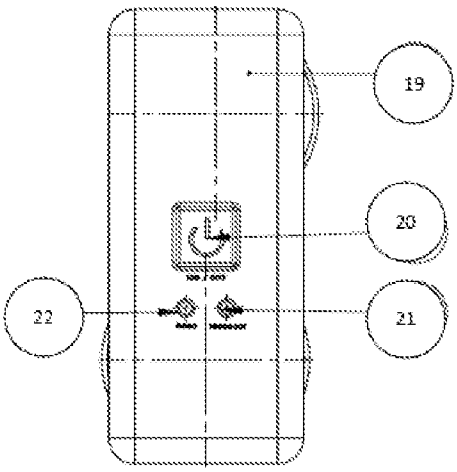
19
20
22
21

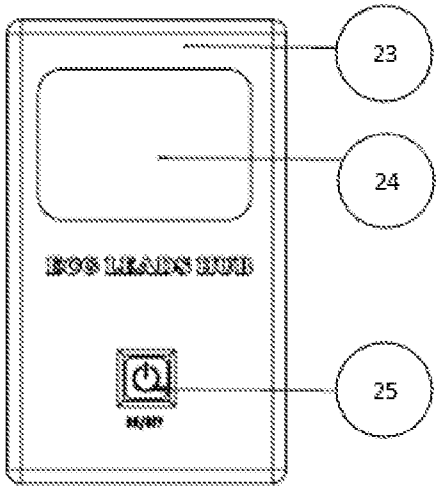
23
24
25

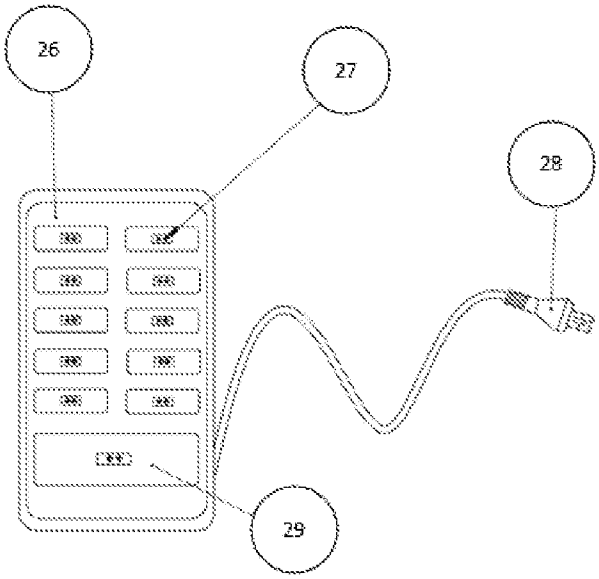
26
27
28
29

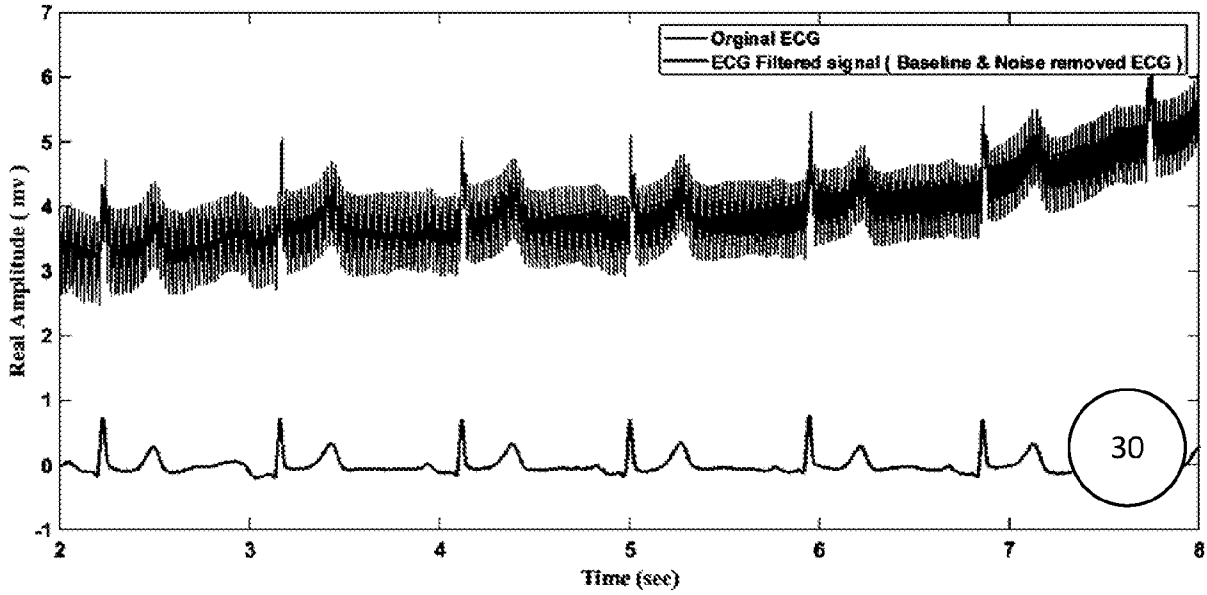
Orginal ECG
ECG Filtered signal (Baseline & Noise removed ECG)
Real Amplitude (mv)
Time (sec)
30

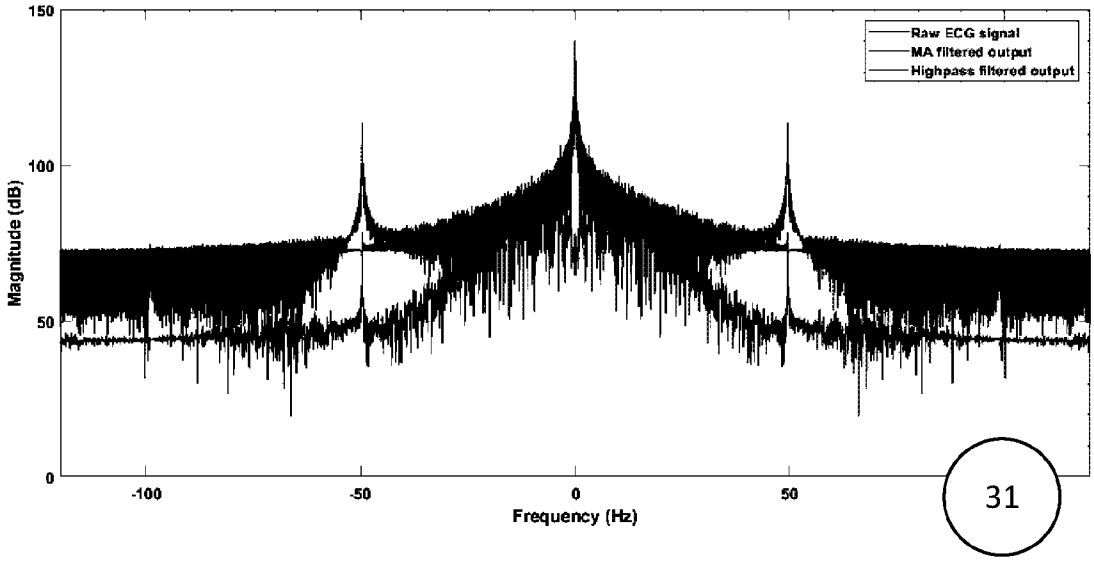
Raw ECG signal
MA filtered output
Highpass filtered output
Magnitude (dB)
Frequency (Hz)
31

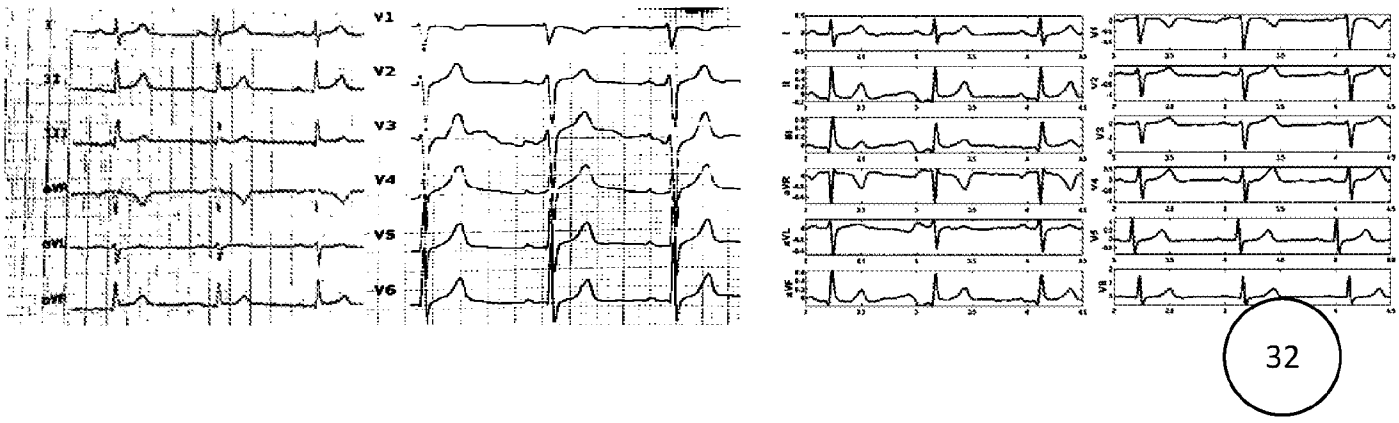
V1
V2
V3
V4
V5
V6
32

INTERNATIONAL SEARCH REPORT

International application No.
PCT/IB2023/063227

A. CLASSIFICATION OF SUBJECT MATTER
A61B5/24,A61B5/318 Version=2024.01

According to International Patent Classification (IPC) or to both national classification and IPC

B. FIELDS SEARCHED

Minimum documentation searched (classification system followed by classification symbols)

A61B

Documentation searched other than minimum documentation to the extent that such documents are included in the fields searched

Electronic database consulted during the international search (name of database and, where practicable, search terms used)

PatSeer, IPO Internal Database

C. DOCUMENTS CONSIDERED TO BE RELEVANT

Category*	Citation of document, with indication, where appropriate, of the relevant passages	Relevant to claim No.
Y	D. Dobrev "Two-electrode non-differential biopotential amplifier" Medical & Biological Engineering & Computing, Vol. 40 (2002) DOI: 10.1007/BF02345453 Complete Document	1-4
Y	WO2020181367A1 (Saif Ahmad, Atul K. Garg) 17.09.2020 (17 September, 2020) Complete Document	1-4

☐ Further documents are listed in the continuation of Box C. ☒ See patent family annex.

* Special categories of cited documents:
"A" document defining the general state of the art which is not considered to be of particular relevance
"D" document cited by the applicant in the international application
"E" earlier application or patent but published on or after the international filing date
"L" document which may throw doubts on priority claim(s) or which is cited to establish the publication date of another citation or other special reason (as specified)
"O" document referring to an oral disclosure, use, exhibition or other means
"P" document published prior to the international filing date but later than the priority date claimed
"T" later document published after the international filing date or priority date and not in conflict with the application but cited to understand the principle or theory underlying the invention
"X" document of particular relevance; the claimed invention cannot be considered novel or cannot be considered to involve an inventive step when the document is taken alone
"Y" document of particular relevance; the claimed invention cannot be considered to involve an inventive step when the document is combined with one or more other such documents, such combination being obvious to a person skilled in the art
"&" document member of the same patent family

Date of the actual completion of the international search	Date of mailing of the international search report
16-04-2024	16-04-2024

Name and mailing address of the ISA/	Authorized officer
Indian Patent Office Plot No.32, Sector 14,Dwarka,New Delhi-110075 Facsimile No.	Bharati Rathore Telephone No. +91-1125300200

INTERNATIONAL SEARCH REPORT
Information on patent family members

International application No.
PCT/IB2023/063227

Citation	Pub.Date	Family	Pub.Date
WO 2020181367 A1	17-09-2020	EP 3934527 A1	12-01-2022
		CN 3132984 A1	17-09-2020