US00D924985S

(12) United States Design Patent

Matsuyama

(10) Patent No.: US D924,985 S
(45) Date of Patent: ** Jul. 13, 2021

(54) **TOY CAR**

(71) Applicant: **EPOCH COMPANY LTD**, Tokyo (JP)

(72) Inventor: **Daisuke Matsuyama**, Tokyo (JP)

(73) Assignee: **EPOCH COMPANY, LTD.**, Tokyo (JP)

(**) Term: **15 Years**

(21) Appl. No.: **29/689,495**

(22) Filed: **Apr. 30, 2019**

(30) **Foreign Application Priority Data**

Nov. 2, 2018 (JP) 2018-024142

(51) **LOC (13) Cl.** **21-01**

(52) **U.S. Cl.**
USPC **D21/551**

(58) **Field of Classification Search**
USPC D12/13–15, 82, 83, 86, 88, 89, 90, 91, D12/93, 94, 95, 97, 98, 99; D21/424, D21/427, 433, 434, 477, 483, 533, 535, D21/548–563, 580, 581; 296/181.1, 296/181.5, 181.3, 183.1, 37.6, 177, 178, 296/180; 446/88, 93, 95, 102, 448
CPC B60R 9/06; B62D 35/00; B60C 2200/20; B62B 5/0033; A63H 17/162; A63H 17/262; A63H 17/264; A63H 17/38; A63H 17/004; A63H 17/26; A63H 17/266; A63H 17/36; A63H 29/00; A63H 29/22; A63H 29/24; A63H 30/04
See application file for complete search history.

(56) **References Cited**

U.S. PATENT DOCUMENTS

D246,169 S * 10/1977 Spencer D12/99
D373,157 S * 8/1996 Bowman D21/552
(Continued)

FOREIGN PATENT DOCUMENTS

CN 300819269 * 8/2008
EM 002198606-0002 * 3/2013
(Continued)

OTHER PUBLICATIONS

"Schleich Horse Club, 17-Piece Playset," Nov. 1, 2017, amazon.com, site visited Apr. 2, 2021, URL: https://www.amazon.com/Schleich-Horse-Club-Mobile-Hanoverian/dp/B06X3S11YM/ref=sr_1_194?dchild=1&keywords=toy+camper+van&qid=1617375053&sr=8-194 (Year: 2017).*
(Continued)

Primary Examiner — Eric L Goodman
Assistant Examiner — Sarah L Smith
(74) *Attorney, Agent, or Firm* — Fitzgerald IP Law; John K Fitzgerald, Esq.

(57) **CLAIM**

The ornamental design for a toy car, as shown and described.

DESCRIPTION

FIG. **1** is a perspective view of portions of the front, top, right side, and interior of a toy car showing my new design;
FIG. **2** is a perspective view of portions of the rear, top, left side, and interior of a toy car showing my new design;
FIG. **3** is a right view thereof;
FIG. **4** is a left view thereof;
FIG. **5** is a top view thereof;
FIG. **6** is a front view thereof;
FIG. **7** is a rear view thereof; and,
FIG. **8** is a perspective view of portions of the front, top, right side, and alternative interior of a toy car showing my new design.

The broken lines shown are included for the purpose of illustrating portions of the article which form no part of the claimed design.

1 Claim, 8 Drawing Sheets

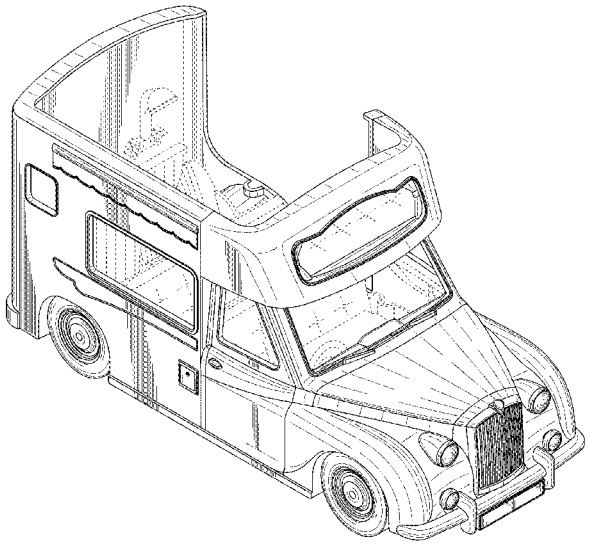

(56) **References Cited**

U.S. PATENT DOCUMENTS

D442,517	S *	5/2001	Hoogenraad	D12/16
D550,787	S *	9/2007	Stewart	D21/552
D604,671	S *	11/2009	Rupp	D12/93
7,950,728	B2 *	5/2011	Plavetich	B60R 9/00 296/193.01
D673,624	S *	1/2013	Kasahara	D21/434
D710,460	S *	8/2014	Hattori	D21/552
D724,158	S *	3/2015	Tsuchiya	D21/559
D760,325	S *	6/2016	Sano	D21/552
D852,901	S *	7/2019	Matsuyama	D21/552
D885,982	S *	6/2020	Tatro	D12/103
D896,323	S *	9/2020	Kamiyama	B60R 9/00 D21/533

FOREIGN PATENT DOCUMENTS

EM	002679597-0003	*	4/2015
FR	112371-008	*	5/1974

OTHER PUBLICATIONS

"LEGO Friends Olivia's Mission Vehicle," Jan. 1, 2018, amazon.com, site visited Apr. 2, 2021, URL: https://www.amazon.com/LEGO-Friends-Olivias-Mission-Building/dp/B075RDRJLX/ref=sr_1_134?dchild=1&keywords=toy+camper+van&qid=1617374735&sr=8-134 (Year: 2018).*

"Polly Pocket Glamping Van," Apr. 10, 2019, amazon.com, site visited Apr. 2, 2021, URL: https://www.amazon.com/Polly-Pocket-Active-Doll-Vehicle/dp/B07JVTXZS5/ref=sr_1_16?dchild=1&keywords=toy+camper+van&qid=1617374351&sr=8-16 (Year: 2019).*

* cited by examiner

FIG. 1

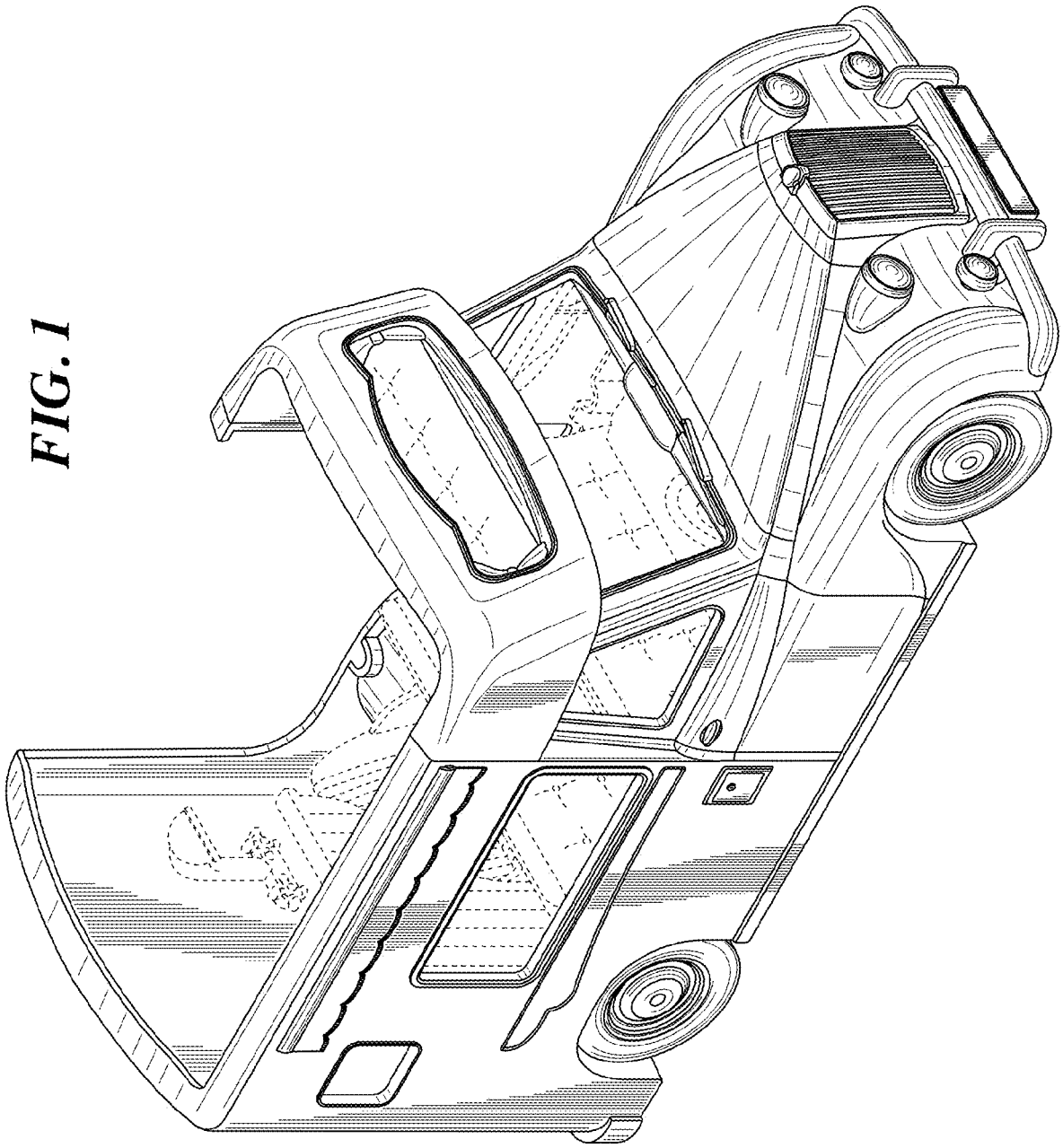

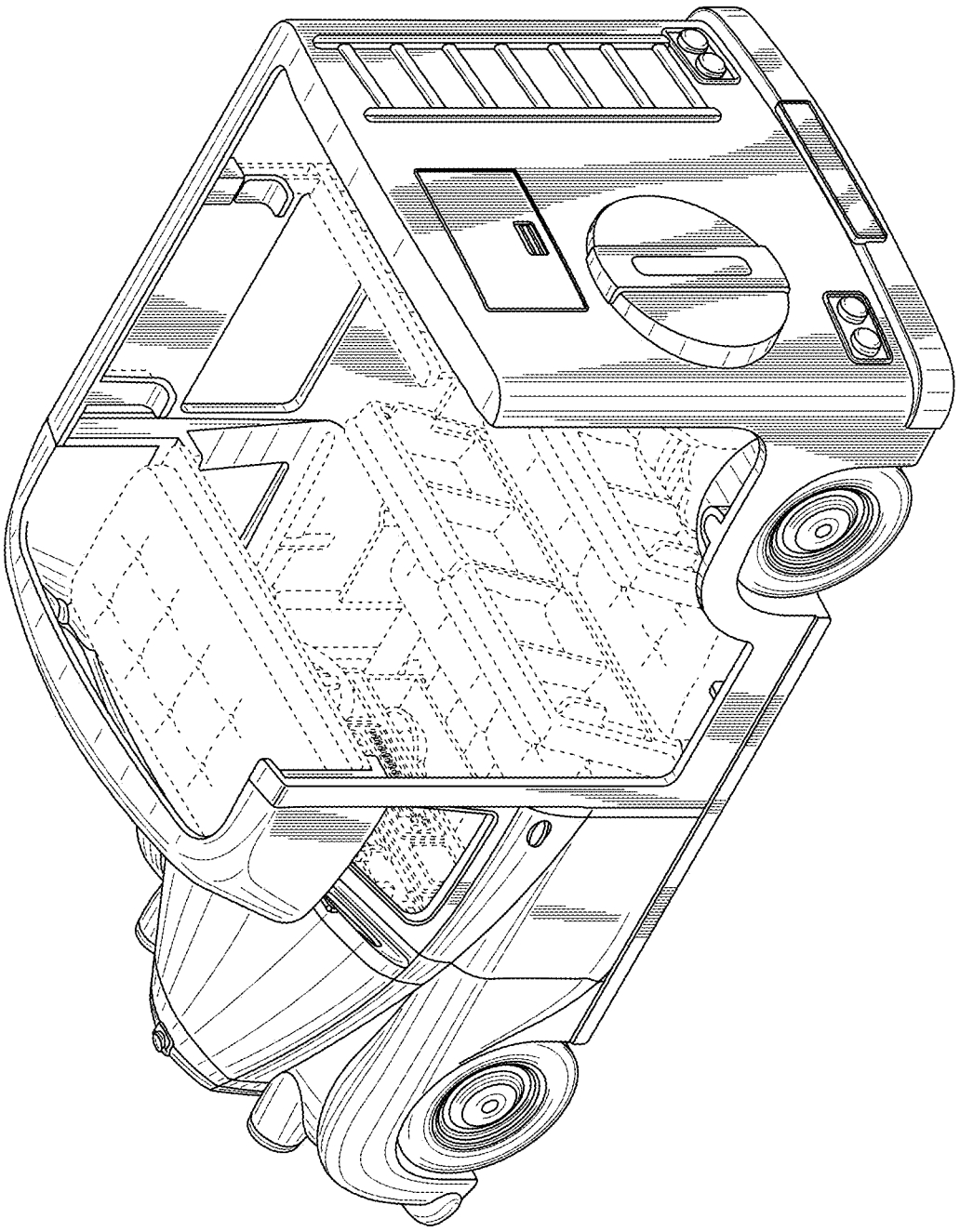

FIG. 2

FIG. 3

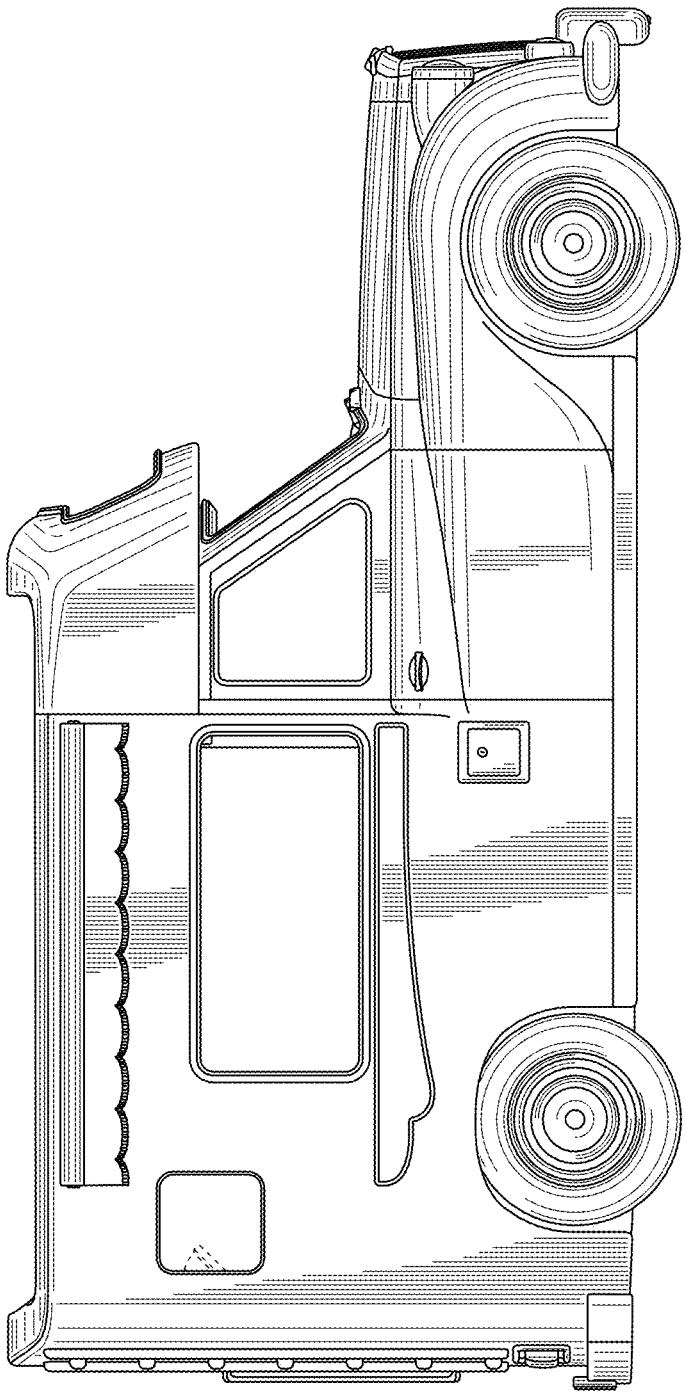

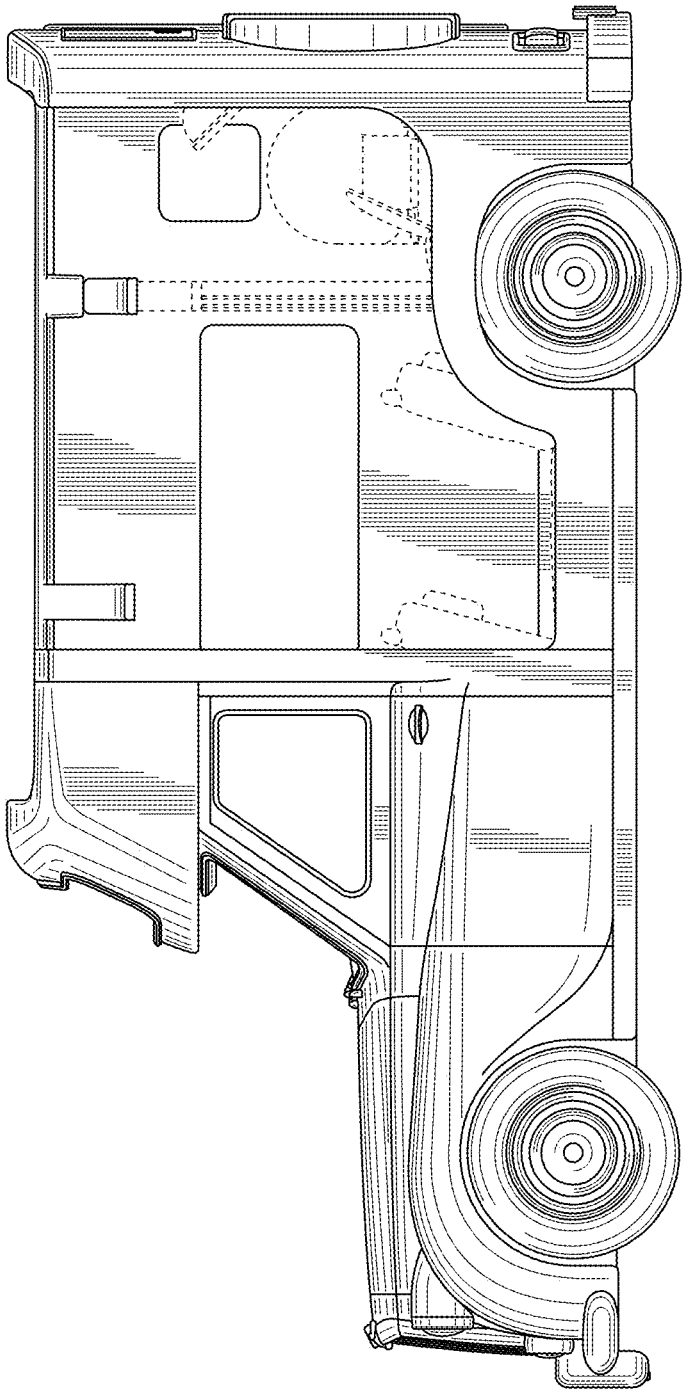

FIG. 4

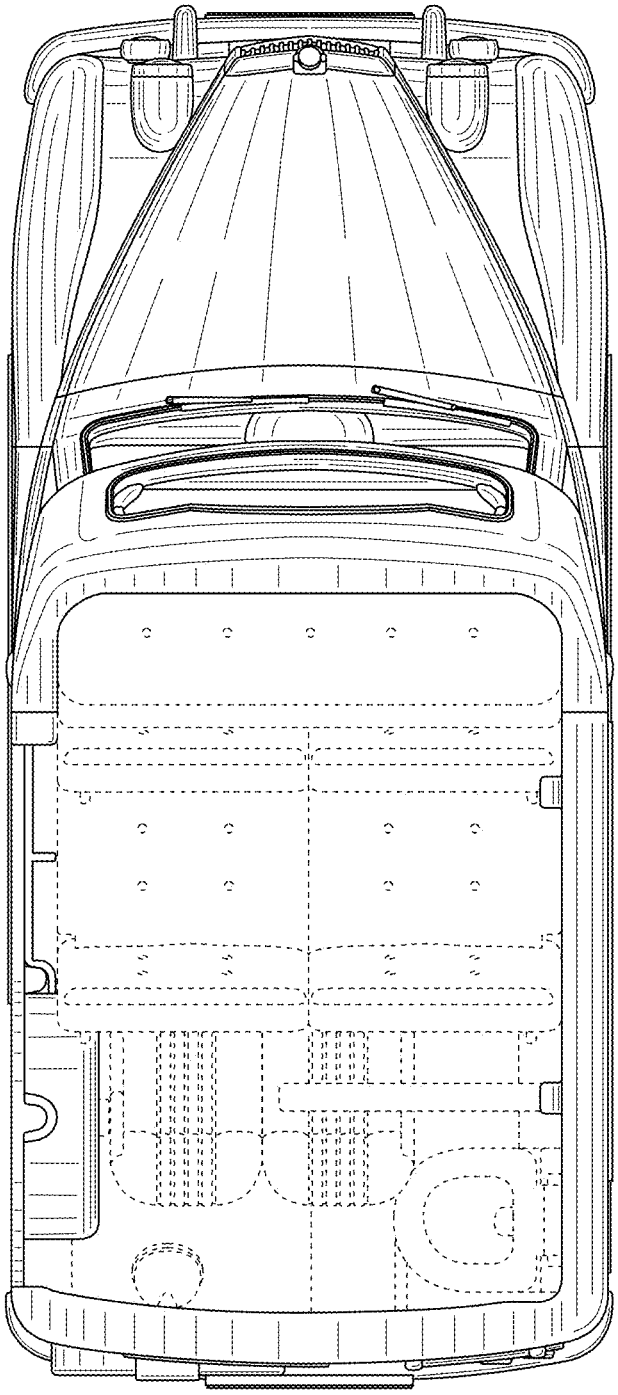

FIG. 5

FIG. 6

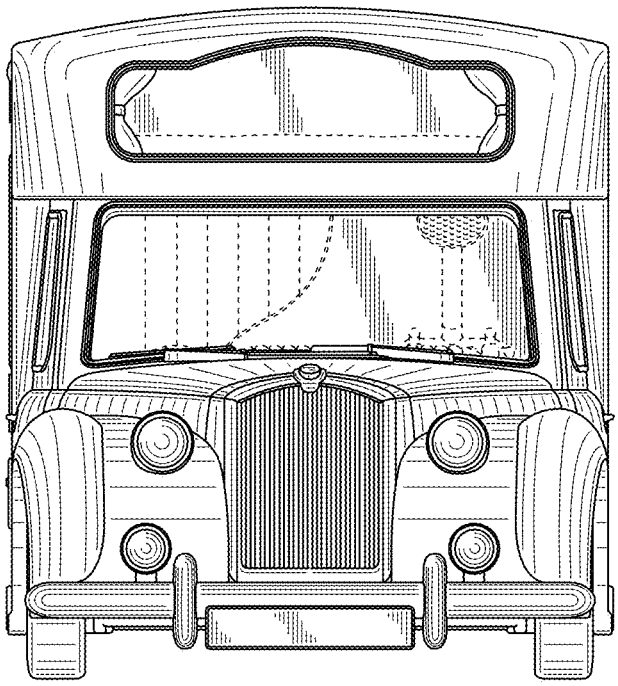

FIG. 7

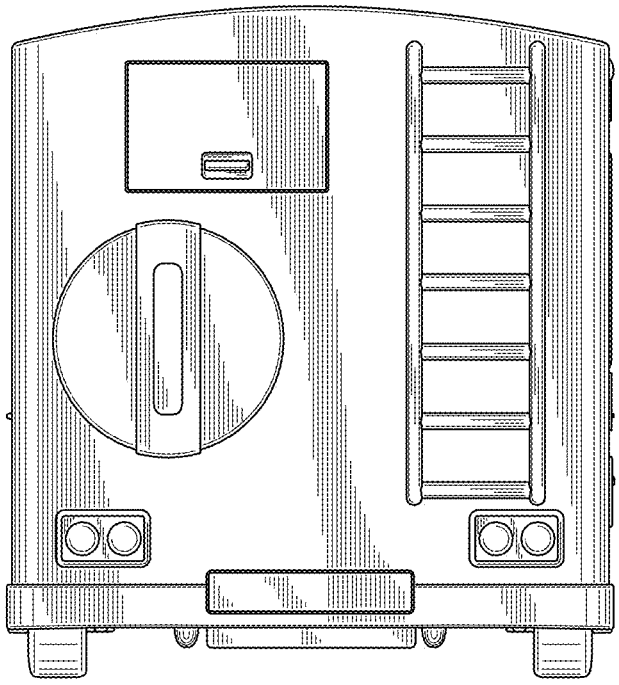

FIG. 8

