United States Patent

[11] 3,604,357

[72] Inventor **Cecil L. Duncan**
Silver Spring, Md.

[21] Appl. No. **821,174**
[22] Filed **May 2, 1969**
[45] Patented **Sept. 14, 1971**
[73] Assignee **The United States of America as represented by the Secretary of the Navy**

[54] **DISCRIMINATING PROXIMITY ORDNANCE FUZE**
10 Claims, 7 Drawing Figs.

[52] **U.S. Cl.** **102/81,** 102/78
[51] **Int. Cl.** **F42c 1/14,** F42c 13/00, F42c 15/40
[50] **Field of Search** 102/76, 78, 81

[56] **References Cited**
UNITED STATES PATENTS

2,023,938	12/1935	Savani	102/81
2,737,892	3/1956	Dalton et al.	102/81
2,989,923	6/1961	Rodriquez Villa et al.	102/81 X
2,998,770	9/1961	Bernard	102/81 X

Primary Examiner—Benjamin A. Borchelt
Assistant Examiner—Thomas H. Webb
Attorneys—R. S. Sciascia and J. A. Cooke

ABSTRACT: A mechanical fuze for aerial ordnance devices having an extendable probe mounting on its nose and an actuator nonresponsive to the presence of foliage and responsive only to target impact. A safety and arming mechanism is provided having a double-locked rotor which rotates to an armed position only after an electrical signal has been delivered to the fuze and after the probe has been extended. A clamp is provided which locks and rigidifies the probe in its extended position.

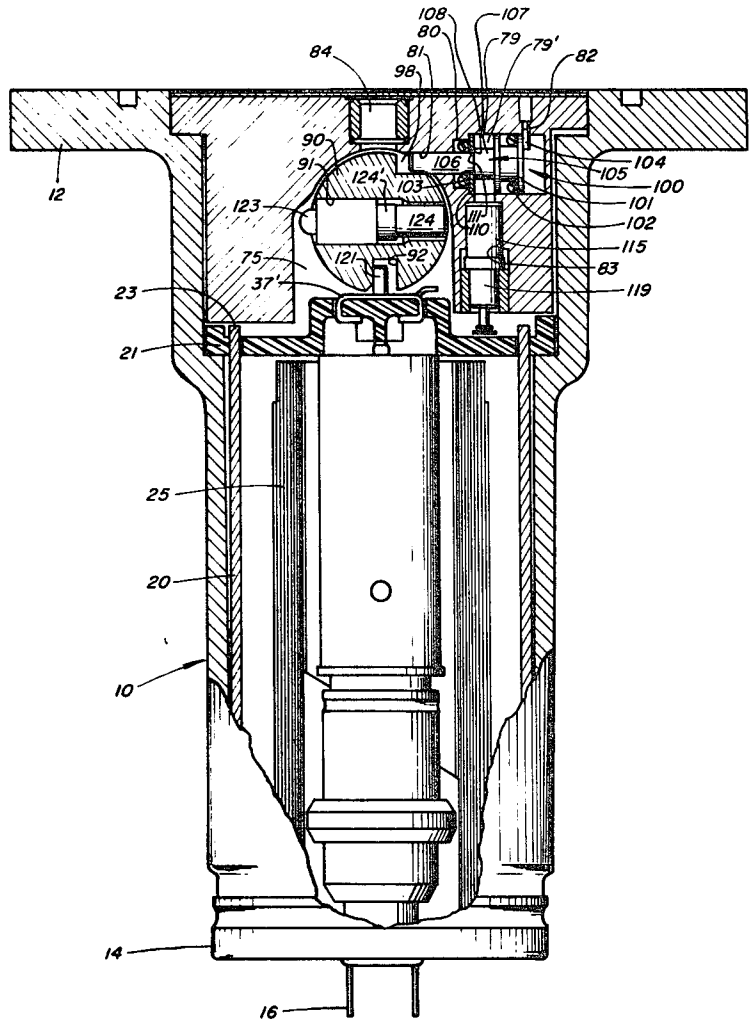

Fig. 1a

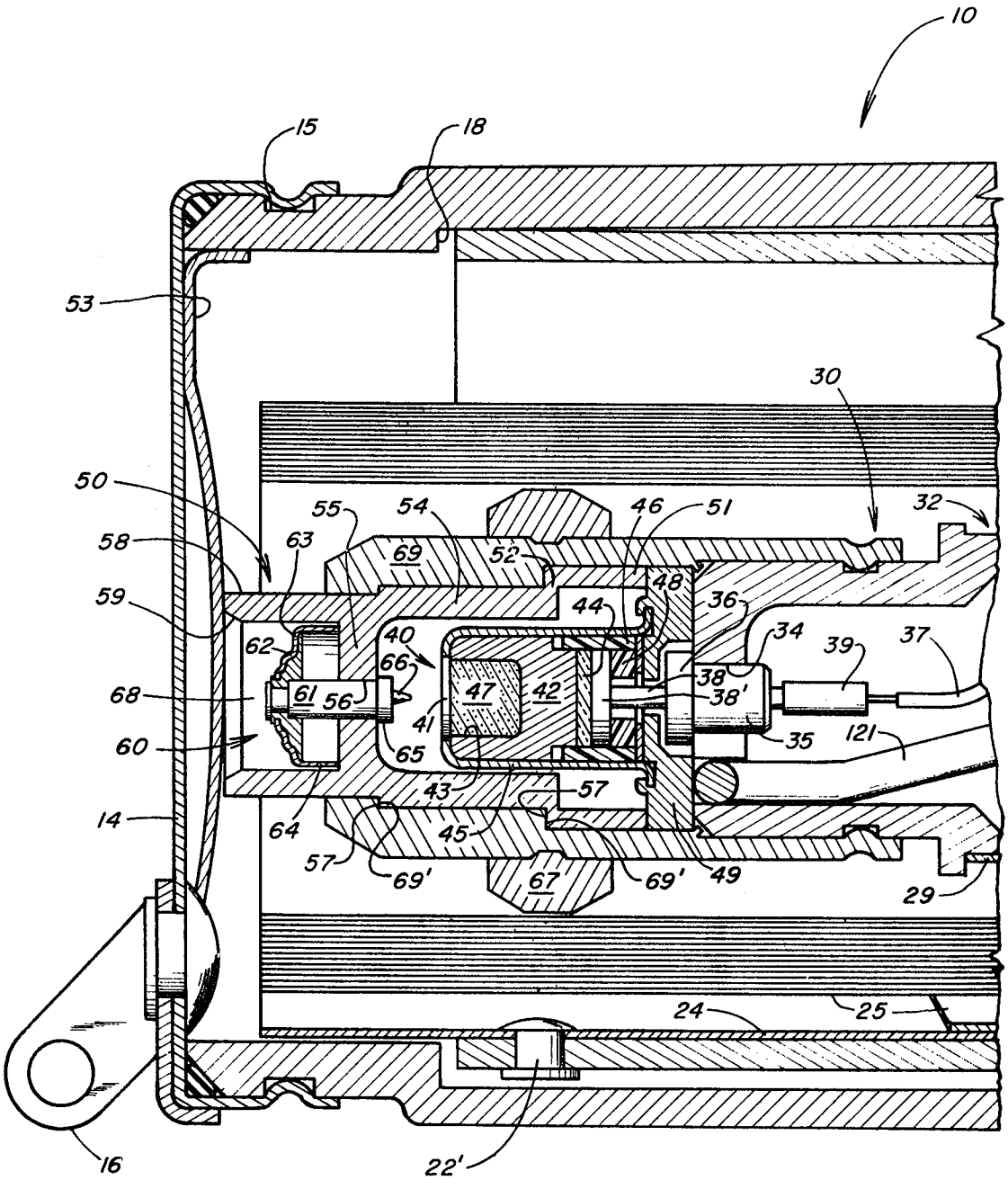

INVENTOR
Cecil L. Duncan

BY J. O. Tresansky
ATTORNEY

Fig. 1b

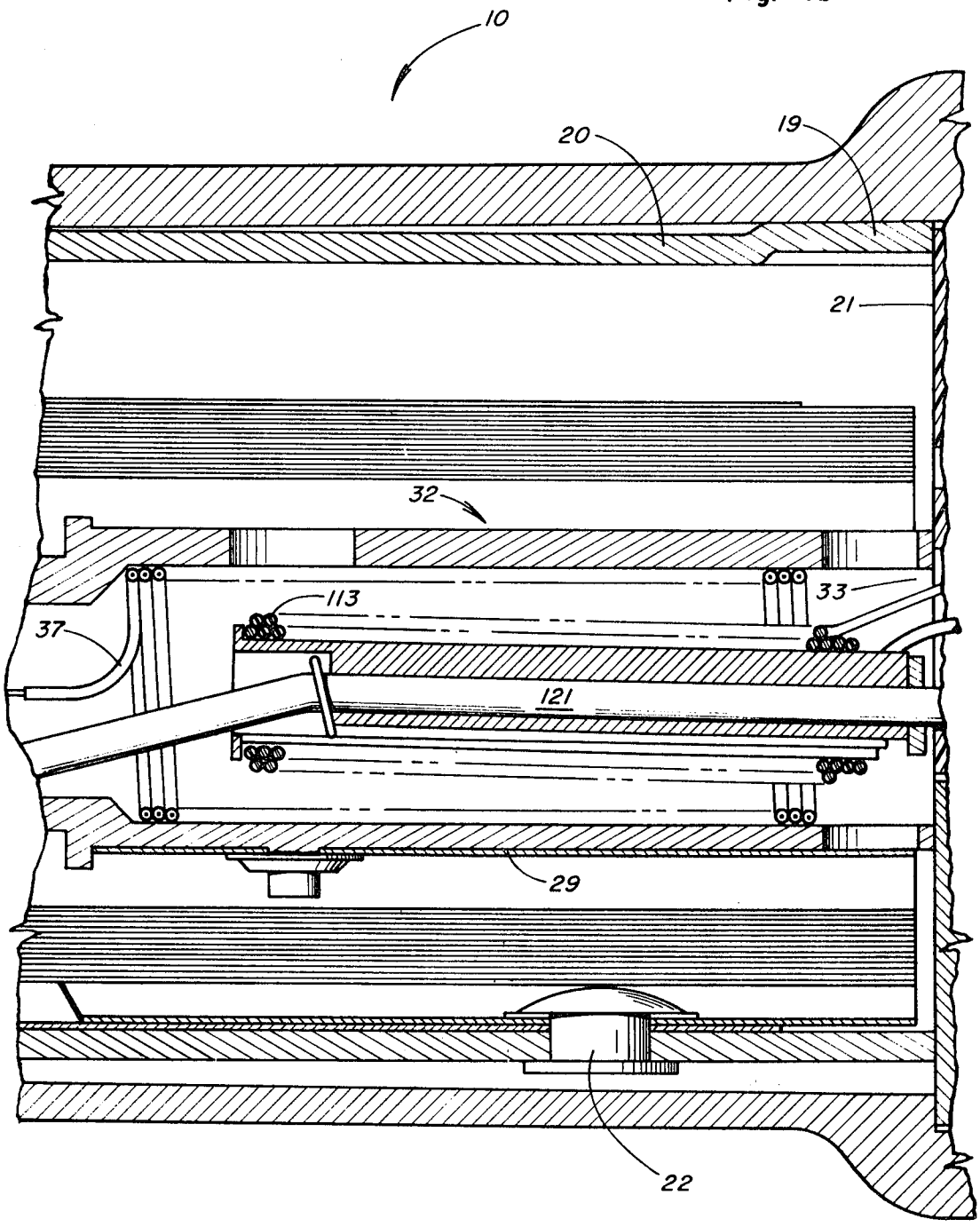

Fig. 1c

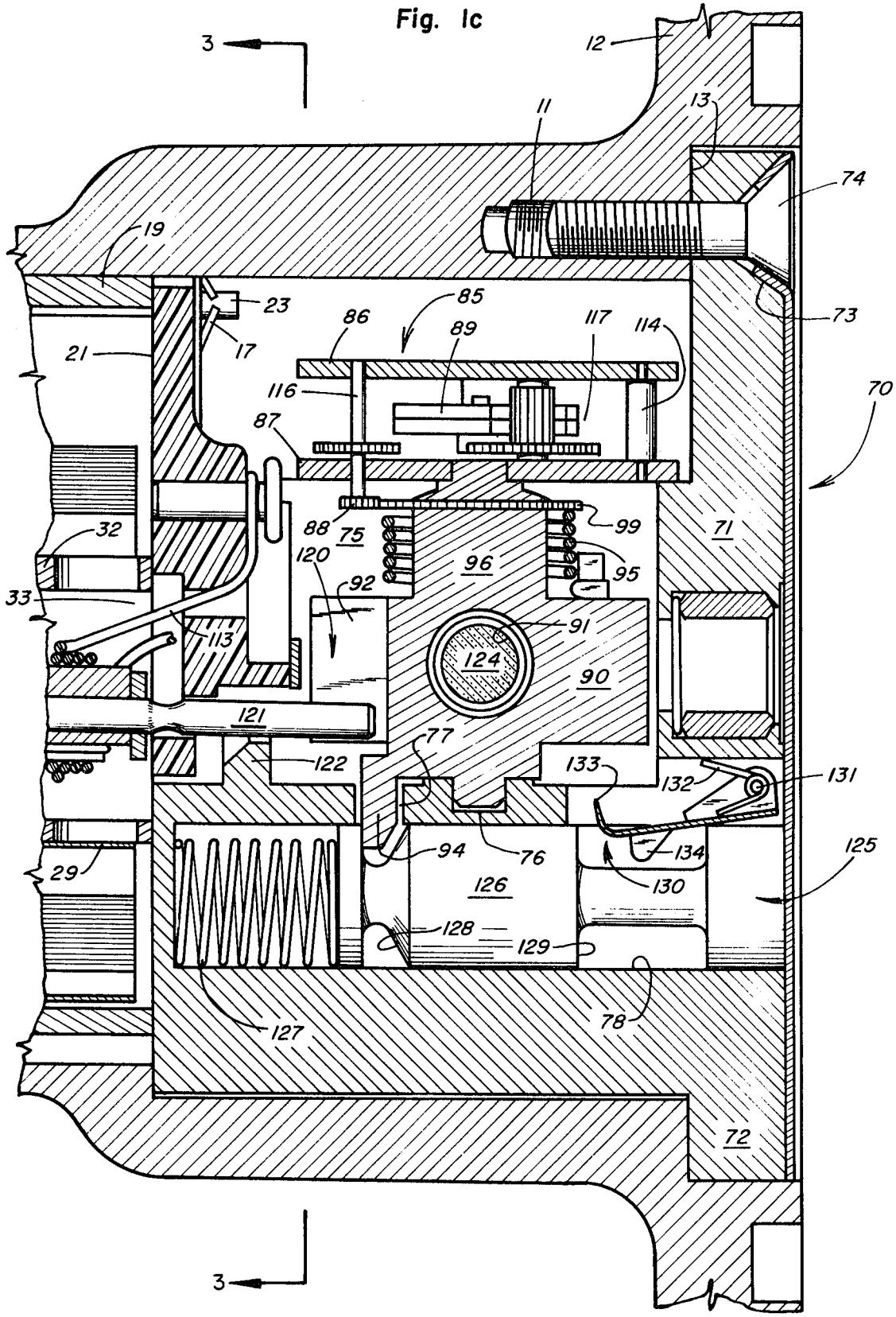
3
12
11
13
74
19
23
85
86
89
117
114
73
21
17
116
70
87
88
75
99
71
32
120
96
95
33
92
91
113
124
90
121
77
122
133
132
131
94
76
134
125
29
126
130
128
129
127
78
72
3

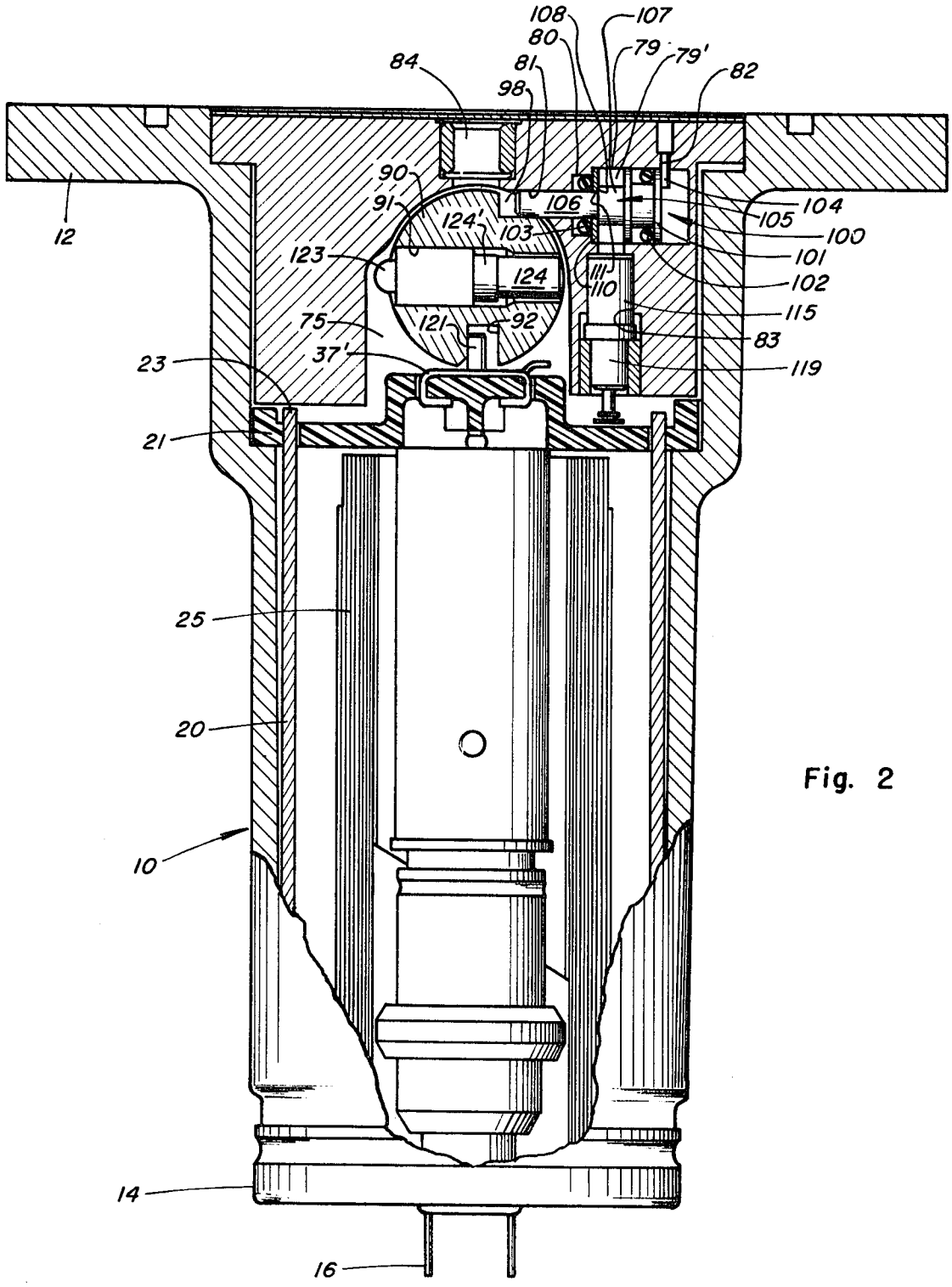
108
107
80
79
79'
84
81
82
98
90
91
106
104
105
124'
103
100
123
101
124
111
110
102
75
121
92
115
37'
83
23
119
21
25
20
10
14
16
12

Fig. 2

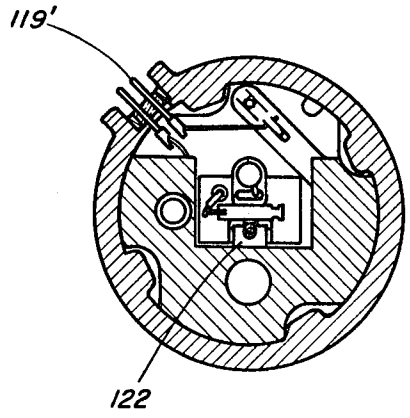

Fig. 3

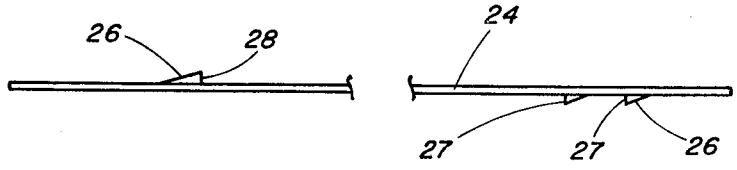

Fig. 4

Fig. 5

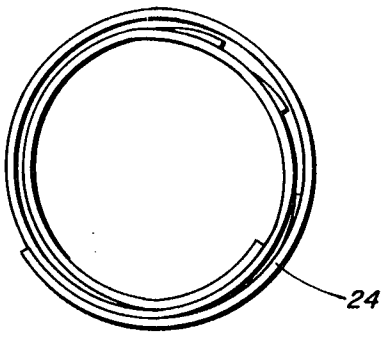

DISCRIMINATING PROXIMITY ORDNANCE FUZE

BACKGROUND OF THE INVENTION

This invention relates generally to ordnance fuzes and more particularly to a discriminating mechanical proximity fuze for an aerial ordnance device.

A widespread problem encountered with fuzes for aerial ordnance devices such as bombs, rockets, projectiles and the like, is the premature detonation of the devices due to impact with the dense foliage above the intended target area. If the actuating mechanism of the fuze of the ordnance device is sufficiently sensitive to function on impact with a target composed of a soft material, such as loose dirt, mud, sand or water then it tends also to function as the ordnance device passes through the dense foliage that covers some targets, causing premature detonation. The problem is compounded where the foliage is at a great height thereby resulting in an ineffectual detonation high above the target. On the other hand, if the actuating mechanism were designed to be insensitive to the impact delivered during passage through the foliage over the target area, then the mechanism tends to be insensitive to impact with such soft targets thus rendering the ordnance device effective only against a hard target, such as a solid surface.

A long felt need has existed, therefore, for a reliable mechanical fuze that will be unaffected by the presence of dense foliage and will positively function on impact with a soft as well as a hard target.

A need also has existed for a mechanical fuze which will affect detonation of an ordnance device at a short distance above the ground. In some instances when the actuating mechanism is mounted on the nose of the ordnance device it may become partially or completely embedded in soft ground before effectiveness of the explosive burst of the ordnance device. Even when detonation is achieved at the instant of contact the ordnance device is at ground level and the effective destructiveness of the burst is far less than it might be at a proximate distance above the ground.

This problem has been the subject of much attention and the proposed solutions have been many and varied. Electronic proximity type fuzes are a well known approach to the problem. In mechanical fuzes, various extensions designed to protrude ahead of the ordnance device and sense the presence of the ground have been employed. One approach of particular interest is the use of a volute extension spring which is stored in a telescoped or compressed form and which becomes deployed or extended in flight in response to some condition being satisfied. An example of this approach is shown in U.S. Pat. No. 3,388,664.

Although ordnance fuzes utilizing such extension probes generally operate satisfactorily, on occasion they have been found to exhibit a tendency to wobble or oscillate in flight. It was found that as the ordnance device passed through dense foliage, this wobbling or oscillation occasionally will cause the probe to engage a tree limb slightly offset from the line of travel of the ordnance device, and as the ordnance device continued to fall along its line of travel the probe would be bent back by the limb and either broken or permanently bent backwards. To eliminate this objectionable probe and its accompanying problems the probe should be made as rigid as possible. Moreover, such a probe is by nature axially collapsible. To prevent such axial collapse at target impact it is preferable that the probe be locked in its extended configuration. Finally, inertia detonating systems require an abrupt deceleration of the fuze for the inertia detonating system to function properly. Thus, to achieve detonation at the desired standoff distance above target ground the probe must be capable of withstanding the force necessary to decelerate the ordnance device.

SUMMARY OF THE INVENTION

Accordingly, one object of this invention is to provide a new and improved fuze for an aerial ordnance device capable of discriminating between foliage and a target composed of solid, loose or soft material.

Another object of the present invention is to provide a new and improved mechanical ordnance fuze actuable on impact with either a soft or hard target, but not foliage, or in the event of an abrupt deceleration.

Another object of the present invention is to provide a new and improved mechanical ordnance fuze actuable a proximate distance above the ground target.

Still another object of this invention is to provide a new and improved mechanical ordnance fuze actuable a proximate distance above the target ground and which is secure against interference with foliage covering the target.

A further object of the instant invention is to provide a new and improved ordnance fuze having desirable safety and arming characteristics.

Briefly, in accordance with the invention, these and other objects are attained by a fuze actuating assembly extendable forwardly of the main fuze body and having a weakened portion rupturable upon impact with a target formed of solid material to affect an explosive ignition and a portion crushable by congestion of loose material of a target composed of such material. The actuating assembly also avoids an explosive ignition by providing shielding from the impact of foliage.

A more complete appreciation of the invention and its many attendant advantages will develop as it becomes better understood by reference to the following detailed description when considered in connection with the accompanying drawings wherein:

FIGS. **1***a*, **1***b* and **1***c* comprise an elevation sectional view of a fuze according to the invention;

FIG. **2** is another elevation view, partly in section, of the fuze of FIGS. **1***a* to **1***c* rotated 90°;

FIG. **3** is a section along lines **3**—**3** of FIG. **1**;

FIG. **4** is an elevational view of the clamp and the louvers formed therein in its prefinished form; and,

FIG. **5** is an elevational view of the clamp in its finished form.

Referring now to the drawings wherein like reference characters designate identical or corresponding parts throughout the several views and more particularly to FIGS. **1***a* to **3** whereon the ordnance fuze is shown as having a generally cylindrical, tubular casing **10** with an integral annular flange **12** at the rear end thereof by means of which the fuze may be attached to an aerial ordnance device, such as a bomb, projectile or the like by conventional means, such as bolts or the like. The forward end of the fuze casing **10** is closed by a lid **14** crimped into a cannelure **15** formed in the fuze casing **10** at the front end thereof. The lid **14** has attached thereto a tab **16** by which the lid **14** may be wrenched off.

The central axial bore of the fuze casing **10** is stepped at **18** to form a shoulder against which an elongate tubular insert **20** bears. The tubular insert **20** fits somewhat loosely within the bore but is swaged outwardly at intervals around its rearward portion to form radial protrusions **19** which bear snugly against the bore wall to firmly secure the tubular insert **20** in place within the fuze casing **10**.

The tubular insert **20** is closed at its rear end by a closure plate **21** which may be made of plastic. Closure plate **21** may be affixed to tubular insert **20** by means of fasteners **17**, such as Speed Nuts which grip a plurality of integral lugs **23** extending through corresponding holes in the closure plate **21**.

Disposed within the tubular insert **20** and attached thereto by a rivet **22** or the like are clamp **24**, to be described more fully hereinafter and an extendable probe **25**. Probe **25** is formed of a volute spring, such as the "Stacer" made by Hunter Spring Company of Hatfield, Pa. In the telescoped position illustrated, the probe is stressed and requires the axial restraining force supplied by the crimped-on lid **14** to maintain it in that position. When the cover is removed, the probe immediately extends itself forward to its fully relaxed unstressed position. As the probe **25** extends, the diameter of its base or rear portion decreases, and when it is again telescoped, the base diameter again increases.

This change in base diameter between the extended and telescoped positions is utilized to enhance the rigidity and axial strength of the extended probe by exerting a constrictive force around the base of the probe when extended, thereby inhibiting any tendency for the base to expand when the probe is stressed.

For this purpose, constrictive locking clamp **24** surrounds the base of probe **25** to exert a constrictive force therearound, and to lock in the constricted position.

The clamp **24**, as more clearly illustrated in FIGS. **4** and **5**, is formed of a sheet of resilient material, such as spring steel rolled into a tight spiral. In its relaxed unstressed condition, as illustrated in FIG. **5**, clamp **24** forms a tube of approximately 2¼ overlapping turns of the sheet. As illustrated in FIG. **1***a* the clamp is attached to tubular insert **20** by rivets **22** and **22'** and has been expanded to approximately 1½ to 1¾ turns and is stressed to exert a constrictive force on the probe **25**. As best seen in FIG. **4** the clamp **24** has formed therein at least three louvers **26**, with two of the three louvers near one end of the material formed to protrude below one surface thereof with the louver edge **27** facing toward the opposite end of the material, and the other of the three louvers formed near the other end of the material and protruding from the opposite surface thereof with its louver edge **28** facing toward the other louvers. The clamp is formed by rolling the material up from the right side to form a tight tube and then treating it, as by heating to relieve the stresses so the position illustrated in FIG. **5** becomes the unstressed configuration. The clamp is then expanded to surround the telescoped probe **25** and, in the expanded position, the louvers of the inner turn are on the other side of the louvers of the outer turn so their sloping sides face each other. When the probe extends, the base thereof reduces in diameter and the clamp correspondingly reduces in diameter causing the louvers of the inner turn and the louver of the outer turn to approach each other. As the clamp diameter continues to decrease, the slope sides of the louvers slide over each other and as the louver edges **27** and **28** pass each other they snap down into an opposed facing relationship thus locking the clamp **24** against any expansion and concomitantly effectively locking the base of the probe at its small diameter. The probe is thereby locked in its extended position and is capable of resisting much greater axial and lateral forces than when its base is not locked at the reduced diameter.

Attached to the inner turn **29** of probe **25** is a fuze actuator assembly generally indicated by the reference numeral **30**. Thus, when the probe **25** is extended, the actuator assembly will be mounted on the forward end thereof.

Actuator assembly **30** has a hollow housing **32** with an open rear end **33** and a front end closed but for an aperture **34** formed therethrough. Disposed within the aperture **34** is an electrical contact member **35** having a shoulder **36** of larger diameter than the aperture **34** which prevents the contact member **35** from passing rearwardly through the aperture. An axial contact pin **38**, having a flat contact disk **38'** fixed to its forward end, extends through and is insulated from contact member **35**. At the forward end of pin **38**, contact disk **38'** makes electrical contact with piezoelectric crystal **44**, and the rear end of pin **38** is connected to connector **39**. The connector **39** connects the pin **38** to an insulated electrical wire **37**, coiled within housing **32**, the other end of which is connected to a contact plate **37'** attached to closure plate **21** as will be explained more particularly hereinafter.

Abutting against the forward end of the actuator assembly housing **32** is a primer housing assembly **40**. The primer housing assembly **40** contains an anvil-shaped member **42** having a forward opening cavity **43** for holding a primer **47** and which is covered by a frangible cover plate **41**. Positioned immediately behind the anvil **42** is the piezoelectric crystal **44** insulated from a shell **45** of the primer housing assembly **40** by an insulator ring **46** and from a rear plate **49** of the primer housing assembly **40** by an insulator washer **48**. The contact pin **38** extends through a hole formed in the rear plate **49** of the primer housing assembly **40** and physically engages the piezoelectric crystal **44**. Thus, when the primer in the primer cavity **43** is detonated, the anvil **42** stresses the piezoelectric crystal **44**, thereby inducing a potential difference thereacross which is conducted via contact pin **38** and connector **39** to the insulated wire **37**, connected to electrical contact plate **37'** the function of which will be explained more fully hereinafter.

Mounted forwardly of and surrounding the primer housing assembly **40** is a foliage discriminator member **50** which includes a base ring **51** connected to a central ring **54** by a relatively weak rupturable or frangible link **52**. The inside diameter of the base ring **51** is slightly larger than the outside diameter of the central ring **54** in order that the latter may telescope within the former when an impact is delivered to the foliage discriminator member **50** of a magnitude sufficient to rupture the frangible link **52** therebetween. The base ring **51**, frangible link **52** and central ring **54** may be integrally formed as illustrated or may be three separate pieces, with the frangible link in the form of a thin washer having an inside diameter the same as that of the central ring and an outside diameter the same as that of the base ring.

Abutting or integral with and extending laterally across the forward edge of the central ring **54** is a guide plate **55** having a central aperture **56** formed therethrough. Extending around the edge of the guide plate **55** and mounted thereon to project forwardly therefrom is a peripheral foliage fending wall **58** having an internal chamfer **59** around the inside forward edge thereof.

Peripheral foliage fending wall **58** defines a pocket **68** in which is mounted a firing pin support assembly **60** which has an impact transmitting rod **61** slidably mounted in an aperture **56** of guide plate **55**. An impact receiving cap **62** is disposed on the forward end of rod **61** and has a diameter substantially larger than that of the rod **61**. Connected to the cap **62** is a crush cup **63**, the sides **64** of which support the cap a short distance forward of the guide plate **55** as illustrated in FIG. **1***a*. A shoulder **65** is formed on the rod **61** of a diameter larger than the aperture **56** thereby preventing the rod from forward movement through aperture **56** beyond the position illustrated in FIG. **1***a*. Rod **61** is provided with a firing pin **66** at the rearward end thereof.

Surrounding the foliage discriminator member **50**, the primer housing assembly **40** and the forward portion of the housing **32** is a ferrule **69** having internal peripheral shoulders **69'** which correspond to and seat on external peripheral shoulders **57** of the foliage discriminator member **50**. The ferrule **69** is crimped onto the housing **32** thereby securing together the component parts of the actuator assembly **30**.

A spacer ring **67** includes ferrule **69** somewhat rearward of the front end thereof to prevent undesirable play of the actuator assembly **30** within the interior of the telescoped probe **25**.

A resilient bearing plate **53** is positioned between the lid **14** and the discriminator member **50** to provide a biasing force to maintain the probe **25** in fully telescoped position, thereby precluding the possibility of a premature withdrawal of arming pin **120** from its locking position, as will be explained more completely hereinafter.

On fuze impact with a target composed of a soft material such as loose dirt, sand, mud or water, the target material will congest inside the pocket **68** and compress against the cap **62**. The force exerted by the congested material on cap **62** will cause the crush cup sides **64** to collapse and rod **61** to be driven rearwardly thereby driving firing pin **66** through the frangible cover **41** into primer **47** to effect detonation thereof.

On the other hand on impact of the fuze with a target composed of hard material, such as stone or armor plate, the force of impact will be transmitted to the frangible link **52** which will rupture, thereby allowing central ring **54** to telescopically slide within base ring **51**. The rearward sliding of ring **54** will carry with it guide plate **55** and, because shoulder **65** prevents forward movement of rod **61** relative to guide plate **55**, the firing pin **66** is carried rearwardly and driven through the frangible cover **41** to engage and detonate the primes **47**.

In turn, an encounter by the fuze with leafy foliage over the target will not produce sufficient force to rupture the frangible link **52**, and wall **58** brushes aside or fends off the foliage, thus protecting the cap **62** from impact therewith. Thus, the actuator will not function as it passes through foliage but it will on impact with a target formed of hard, soft or loose material.

A safety and arming assembly **70** is mounted at the rear of fuze casing **10**. This assembly includes a mounting block **71** having an integrally formed flange **72** which fits into a corresponding ledge **13** formed in the inside periphery of flange **12**, thereby permitting the rear surface of mounting block **71** to be flush with the rear face of flange **12**. Flange **72** has countersunk holes **73** spaced therearound which correspond with threaded holes **11** formed in the fuze casing **10** for receiving screws **74** to secure the mounting block **71** in the fuze casing **10**.

Formed in the main body of the mounting block **71** is a central compartment **75**, but seen in FIG. **3**. The compartment **75** is defined on three sides and the bottom by the mounting block **71** and on the fourth side by the baseplate **87** of a timer assembly **85**, FIG. **1***c*, to be described hereinafter.

An arming rotor **90** is positioned within the compartment **75** and journaled at one end in the timer assembly baseplate **87** and at the other end in a rocket **76** in the mounting block. The rotor **90** has a transverse bore **91** formed therethrough for receiving a detonator **124**, but seen in FIG. **2**, an axial slot **92** for receiving the arming pin **120**, and a tangential notch **98** for engaging a locking shaft **105**. A projecting tang **94**, seen in FIG. **1***c*, extends from the rotor **90**, through a 90° arcuate slot **77** formed in the mounting block **71** concentric with the axis of the rotor **90**, and into the bore **78** of the inertia detonating system to be described hereinafter. A torsion spring **95** is positioned about shaft **96** of the rotor, having one end attached to the shaft and the other end attached to the mounting block. The spring **95** biases the rotor **90** in the counterclockwise direction as viewed in FIG. **2** and will rotate it 90° when the rotor is unlocked as will be described hereinafter.

The first or pressure operated safety lock mechanism **100**, best seen in FIG. **2**, includes a piston **101** having a peripheral groove formed therein to hold an O-ring seal **102**. Piston **101** rides in a cylindrical bore **79** formed in the mounting block **71**. The bore **79** has a wide diameter portion in which the piston rides, a reduced diameter portion **80** for receiving an O-ring seal **103**, and a narrow diameter portion **81** which extends traversely through the mounting block to compartment **75** for receiving locking shaft **105**. A small diameter hole is drilled into the wall of bore **79** adjacent the rear face of piston **101** in the forward or locking position shown in FIG. **2**. A shear wire **104** is secured in the hole **82** and prevents the premature rearward movement of piston **101**.

Attached to and projecting forwardly of piston **101** is the locking shaft **105** having a main locking portion **106** and a short spotting portion **107** of somewhat larger diameter than the former portion. A shoulder **108** formed by the difference in diameters of the two portions is useful for positioning the piston **101** and for holding a washer **110** in place. Washer **110** has a central aperture **111** substantially the same as the diameter of the locking portion **106** of the shaft **105** but smaller than that of spotting portion **107** and is positioned in the bore **79** immediately adjacent the reduced position **80** with its central aperture **111** aligned with the narrow portion **81** of bore **79**. On assembly, the piston **101** is inserted into the bore **79** until the shoulder **108** abuts against the washer **110**, defining between the washer **110** and the front face of piston **101** a pressure chamber **79'**. In this assembled position the rear face of piston **101** is adjacent and forward of hole **82** so shear wire **104** may be inserted and secured in place.

The locking shaft **105** is of a length such that when shoulder **108** abuts washer **110**, shaft **105** extends through bore **81** and protrudes into compartment **75** engaging the tangential notch **98** formed in the periphery of rotor **90**. The locking shaft **105** must be withdrawn from engagement with the tangential rotor notch **98** before the rotor **90** can rotate 90° to its arm position.

The withdrawal of shaft **105** is affected by means of pressure acting in chamber **79'** against the front face of piston **101**. This pressure is generated by a gas generating pyrotechnic composition **115** positioned in bore **83** communicating with chamber **79'**. The gas generating pyrotechnic composition **115** is initiated by an electroresponsive detonator (not shown) in bore **83** and itself initiated by an electrical impulse delivered to an electrical connector **119** via electrical plug **119'** (FIG. **3**) delivered from an external source. The pressure in chamber **79'** generated by composition **115** exerts sufficient force against piston **101** to sever shear wire **104** and pushes piston **101** and locking shaft **105** down through the bore until the piston abuts against the inside wall of the fuze casing **10**. The O-ring seals **102** and **103** retain the pressure in the chamber **79'** so the piston is prevented from returning to its initial locking position. Moreover, the O-ring seals **102** and **103** exert a frictional force on the piston and shaft which tends to retard a return movement thereof.

As best seen in FIG. **1***c*, the second or extension actuated, safety lock mechanism **120** includes arming pin **121** which is connected its forward end to the actuator housing **32**, extends between the arms of a brace **122** (FIG. **3**), and into the axial slot **92** of rotor **90**, thereby initially locking the rotor in its unarmed position and preventing rotation thereof. When the extendable probe **25** extends, it carries housing **32** and arming pin **121** with it thereby withdrawing the end of pin **121** from the rotor axial slot **92** and permitting spring **95** to rotate the rotor **90** to its armed position.

As shown in FIG. **1***c*, a timer assembly **85** is mounted on block **71** housing a front plate **86** and a baseplate **87** separated by three spacer rods **114**. Mounted on a shaft **116** extending through the baseplate **87** on the bottom side thereof is an input gear **88** which is connected via the shaft and through an amplifying gear train **117** to an escapement mechanism **89** which limits the speed at which input gear **88** turns.

Keyed to rotor shaft **96** is a gear **99** having gear teeth projecting therefrom over an arc of about 45°. The input gear **88** is so positioned on the baseplate **87** as to be engaged by the teeth of gear **99** when the rotor is in its safe or unarmed position. When the two safety locks **105** and **121** are withdrawn from their respective locking positions in the rotor notch **98** and slot **92** respectively, spring **95** turns the rotor counterclockwise as viewed in FIG. **2** with the speed of rotation being governed by the escapement mechanism **89** by way of rotor gear **99**, input gear **88** and the amplifying gear train **117**. When the rotor has rotated approximately 45°, the teeth on gear **99** run off input gear **88** and spring **95** snaps the rotor around the remaining 45° to its armed position. The rotor is prevented from rotation beyond its armed position by tang **94** abutting the end of the arcuate slot **77** formed in mounting block **71**, which slot extends through a 90° arc, thereby permitting rotation of the rotor of only 90°.

Referring now to FIG. **2**, when the rotor **90** rotates to its armed position, the spring biased contact bottom **123** makes contact with contact plate **37'** affixed to closure plate **21** to which electrically insulated wire **37** is connected. A complete electrical circuit is thus established between the piezoelectric crystal **44**, contact pin **38**, connector **39**, wire **37**, contact plate **37'**, contact bottom **123** to the electric initiator **124'** of detonator **124**.

When rotor **90** is in its armed position detonator **124** is aligned with the channel **84** by way of which the ignition of detonator **124** is conveyed to the detonator of the ordnance device with which the fuze of the instant invention is associated.

If, for some reason, the detonator **124** fails to be initiated by the electrical impulse generated by the piezoelectric crystal **44**, the fuze is provided with an auxiliary inertia detonating mechanism **125** consisting of an inertia weight **126** slidably positioned in a bore **78** in block **71** and biased toward the rear of the bore by a coil spring **127**.

Inertia weight **126** has two spaced peripheral grooves; one being a narrow groove **128** near the forward end of the weight

and the other a wider groove **129** near the rear end thereof. Narrow groove **128** accommodates the rotor tang **94** when the rotor is in its safe or unarmed position and thereby prevents weight **126** from moving forward in the event that the fuze is subjected to an inadvertent impact force, such for example as by being dropped.

An auxiliary L-shaped firing pin **130** is pivotally mounted on a pin **131** and is normally biased away from the rotor **90** by a spring **132** mounted on pin **131**. The firing pin **130** is bent 90° toward the rotor **90** and sharpened to a point **133**. Projecting below the firing pin **130** and into the wide groove **129** in a cam **134** having a sloping side facing the rear edge of the wide groove **129**.

When the rotor **90** is in its armed position, the point **133** of firing pin **130** is aligned with an auxiliary primer (not shown) located in the side of rotor **90**, and rotor tang **94** has rotated with the rotor out of the narrow groove **128**. Upon impact, the inertia force acting on weight **126** will overcome the restraining force being exerted thereon by spring **127** and weight **126** will ride forward, compressing spring **127**. The rear edge of groove **129** will stroke cam **134** causing firing pin **130** to pivot about pin **131** thereby driving firing pin point **133** into engagement with the auxiliary primer. Detonation of the auxiliary primer affects detonation of the detonator **124**. Since a moderately high impact is required to cause the auxiliary detonating mechanism **125** to function, the extendable probe **25** must be sufficiently strong to withstand this impact to secure detonation with the desired standoff above the target.

Operationally, when the fuze and its associated ordnance device is released from it launching vehicle, such as an aircraft or a rocket, an electrical signal from the launching vehicle is applied to detonator **118** via electrical connector **119**, thereby initiating gas generating composition **115**. The pressure developed by gas generating composition **115** acts against piston **101** causing withdrawal of locking shaft **105** from notch **98** of rotor **90**. With the lid **14** is wrenched off, as by a wire connected between the launch vehicle and the lid tab **16**, the extendable probe **25** extends, carrying with it actuator assembly **30** and arming pin **121**. This action withdraws arming pin **121** from slot **92** of rotor **90** thereby releasing the rotor from its initial unarmed condition to be rotated 90° under the influence of spring **95** to its armed position.

The probe extends to its full length, being restrained from undue extension by a nylon tether **113**, and is locked in its extended position by locking clamp **24**.

As the fused aerial ordnance device approaches its hard or soft target, the forward orientation of the probe is maintained by a conventional retardation device on the rear of the device. As hereinbefore disclosed the actuator **30** passes uneffected through any foliage encountered and functions on impact with the target to affect detonation of the ordnance device a proximate distance above the target.

Obviously, numerous variations and modifications of the above described best mode or preferred embodiment of the invention, defined by the appended claims, may be made.

What is claimed as new and desired to be secured by Letters Patent is:

1. In a fuze for an aerial ordnance device, a fuze actuating means comprising:

forwardly projecting circumferentially disposed means for fending off foliage encountered in the path of the device over the target, said fending means defining a forwardly opening pocket;

a firing pin;

a primer operatively aligned with said firing pin;

impact receiving means operatively connected to one of said primer and firing pin for affecting forceful engagement of said firing pin and said primer upon impact with said impact receiving means;

said impact receiving means having portions thereof located within said pocket, movable therewith, and frangibly supported rearward of the forward opening thereof by frangible support means;

mounting means for supporting said fending means including a weak portion rupturable upon impact of said fending means with a hard target;

whereby foliage encountered in the path of the device will be fended off and prevented from impinging against said impact receiving means, and impact of said fending means with a soft or loose material will cause said material to be gathered and congested within said pocket against said impact receiving means, causing rearward movement thereof and affecting engagement of said primer and said firing pin, and impact of said fending means with a hard or solid target will cause the rupture of said weak portion thereby causing rearward movement of said impact receiving mean and affecting engagement of said primer and said firing pin.

2. Apparatus according to claim **1** wherein:

said fending means further comprises means for slidably guiding the rearward movement of said impact receiving means on impact with said materials, said guide means comprising a plate having means defining an aperture therethrough,

said impact receiving means being slidably disposed within said aperture, and comprising a rod and a cap affixed to the forward end of said rod,

said plate defining the rear terminus of said pocket;

said firing pin being attached to the rearward end of said impact receiving means;

said primer being mounted to the rear of and adjacent to said firing pin;

said frangible support means comprising a crush cup having sidewalls contacting said plate and a bottom wall affixed to said cap;

whereby said crush cap restrains said impact receiving means in its forward position before impact with said materials, but at said impact said materials are congested within said pocket against said cap whereat said crush cap sidewalls and bottom collapse and allow said impact receiving means to be impelled rearwardly by said material.

3. Apparatus according to claim **1** further including:

means extendable forwardly from the ordnance device for positioning said actuating means a proximate distance forward of said device;

4. Apparatus according to claim **3** wherein said extendable means comprises:

an extendable probe comprising a volute spring which is extended in the relaxed, unstressed condition thereof and which is stressed in the telescoped condition, thereof whereby said probe tends to assume the extended configuration,

said actuating means being attached to the forward end of said probe and said probe being attached at the rearward end thereof to said fuze.

5. Apparatus according to claim **3** further comprising:

locking means connected to said extendable means for locking said extendable means in the extended position thereof.

6. The device of claim **4**, further comprising: clamp means for exerting a constrictive force about the rearward end of said probe, said clamp means having at least one partly overlapping loop of resilient sheet material disposed around the outside turn of said probe when said probe is in the collapsed condition thereof, said loop being biased to exert an inward, constrictive force on said probe, said clamp means having at least one set of locking louvers comprising at least two aligned louvers formed in said resilient material to protrude from opposite sides thereof and having the louver edges facing toward each other, whereby when the clamp is allowed to contract the inclines of the louver sides will slide over each other until the louver edges pass each other, than any radial expansion of said loop is prevented by the abutting louver edges.

7. Apparatus according to claim **6** wherein:

said fending means further comprises means for slidably guiding the rearward movement of said impact receiving means on impact with said materials, said guide means comprising a plate having means defining an aperture therethrough,

said impact receiving means being slidably disposed within said aperture, and comprising a rod and a cap affixed to the forward end of said rod,

said plate defining the rear terminus of said pocket;

said firing pin being attached to the rearward end of said impact receiving means;

said primer being mounted to the rear of and adjacent to said firing pin;

said frangible support means comprising a crush cup having sidewalls contacting said plate and a bottom wall affixed to said cap;

whereby said crush cup restrains said impact receiving means in its forward position before impact with said materials, but at said impact said materials are congested within said pocket against said cap whereat said crush cap sidewalls and bottom collapses and allow said impact receiving means to be impelled rearwardly by said materials.

8. Apparatus according to claim **3** further comprising:

a safety and arming mechanism having arming means movable between a safe position and an armed position,

extension actuated locking means connected to the forward end of said extendable means for locking said arming means in said safe position

whereby, when said extendable means extends the forward end thereof carries said locking means forward thereby unlocking said arming means.

9. Apparatus according to claim **8** further comprising:

pressure actuated locking means for locking said arming means in said safe position including means for generating a fluid pressure,

movable means shiftable under the influence of said pressure, means for directing said fluid pressure against said movable means, and means connected to said movable means for preventing the movement of said arming means to armed position until said movable means is shifted by said fluid pressure.

10. Apparatus according to claim **6** further comprising:

said fending means further comprises means for slidably guiding the rearward movement of said impact receiving means on impact with said materials, said guide means comprising a plate having means defining an aperture therethrough,

said impact receiving means being slidably disposed within said aperture, and comprising a rod and a cap affixed to the forward end of said rod,

said plate defining the rear terminus of said pocket;

said firing pin being attached to the rearward end of said impact receiving means;

said primer being mounted to the rear of and adjacent to said firing pin;

said frangible support means comprising a crush cap having sidewalls contacting said plate and a bottom wall affixed to said cap;

whereby said crush cap restrains said impact receiving means in its forward position before impact with said materials, but at said impact said materials are congested within said pocket against said cap whereat said crush cap sidewalls and bottom collapse and allow said impact receiving means to be impelled rearwardly by said materials.