(12) STANDARD PATENT (11) Application No. **AU 2012331716 B2**
(19) AUSTRALIAN PATENT OFFICE

(54) Title
Interface comprising a nasal sealing portion

(51) International Patent Classification(s)
A61M 16/06 (2006.01)

(21) Application No: **2012331716** (22) Date of Filing: **2012.10.31**

(87) WIPO No: **WO13/066195**

(30) Priority Data

(31) Number	(32) Date	(33) Country
61/553,872	**2011.10.31**	**US**
61/715,214	**2012.10.17**	**US**

(43) Publication Date: **2013.05.10**
(44) Accepted Journal Date: **2017.06.29**

(71) Applicant(s)
Fisher & Paykel Healthcare Limited

(72) Inventor(s)
Bearne, Peter David Alexander;Patel, Roheet;Middelkoop, Kristin Elizabeth;Cox, Michael John Henri;Mashal, Fadi;Olsen, Gregory James;Mason, Isaac Tristram Tane;Stephenson, Matthew Roger

(74) Agent / Attorney
AJ PARK, GPO Box 2600, Sydney, NSW, 2001, AU

(56) Related Art
EP 2130563
GB 2385533
EP 2417994
US 2011/0308526

(12) INTERNATIONAL APPLICATION PUBLISHED UNDER THE PATENT COOPERATION TREATY (PCT)

(19) World Intellectual Property Organization
International Bureau

(43) International Publication Date
10 May 2013 (10.05.2013)

WIPO | PCT

(10) International Publication Number
WO 2013/066195 A1

(51) International Patent Classification:
A61M 16/06 (2006.01)

(21) International Application Number:
PCT/NZ2012/000199

(22) International Filing Date:
31 October 2012 (31.10.2012)

(25) Filing Language: English

(26) Publication Language: English

(30) Priority Data:
61/553,872 31 October 2011 (31.10.2011) US
61/715,214 17 October 2012 (17.10.2012) US

(71) Applicant: **FISHER & PAYKEL HEALTHCARE LIMITED** [NZ/NZ]; 15 Maurice Paykel Place, East Tamaki, Auckland 2013 (NZ).

(72) Inventors: **BEARNE, Peter David Alexander**; 128 Paihia Road, One Tree Hill, Auckland 1061 (NZ). **PATEL, Roheet**; 4 Frederick Street, Hillsborough, Auckland 1042 (NZ). **MIDDELKOOP, Kristin Elizabeth**; 2 The Boulevard, Sunnyhills, Auckland 2010 (NZ). **COX, Michael John Henri**; 9 Marendellas Drive, Buckland Beach, Auckland 2014 (NZ). **MASHAL, Fadi**; 3/341 Hillsborough, Hillsborough, Auckland 1042 (NZ). **OLSEN, Gregory James**; 49a Uxbridge Road, Mellons Bay, Auckland 2014 (NZ). **MASON, Isaac Tristram Tane**; 63a Severn Grove, Pontcanna, Cardiff, South Wales CF119EP (GB). **STEPHENSON, Matthew Roger**; 14 Fernleigh Avenue, Royal Oak, Auckland 1023 (NZ).

(74) Agents: **BROWN, Hadleigh, R.** et al.; A J Park, PO Box 949, Wellington 6140 (NZ).

(81) Designated States *(unless otherwise indicated, for every kind of national protection available)*: AE, AG, AL, AM, AO, AT, AU, AZ, BA, BB, BG, BH, BN, BR, BW, BY, BZ, CA, CH, CL, CN, CO, CR, CU, CZ, DE, DK, DM, DO, DZ, EC, EE, EG, ES, FI, GB, GD, GE, GH, GM, GT, HN, HR, HU, ID, IL, IN, IS, JP, KE, KG, KM, KN, KP, KR, KZ, LA, LC, LK, LR, LS, LT, LU, LY, MA, MD, ME, MG, MK, MN, MW, MX, MY, MZ, NA, NG, NI, NO, NZ, OM, PA, PE, PG, PH, PL, PT, QA, RO, RS, RU, RW, SC, SD, SE, SG, SK, SL, SM, ST, SV, SY, TH, TJ, TM, TN, TR, TT, TZ, UA, UG, US, UZ, VC, VN, ZA, ZM, ZW.

(84) Designated States *(unless otherwise indicated, for every kind of regional protection available)*: ARIPO (BW, GH, GM, KE, LR, LS, MW, MZ, NA, RW, SD, SL, SZ, TZ,

[Continued on next page]

(54) Title: INTERFACE COMPRISING A NASAL SEALING PORTION

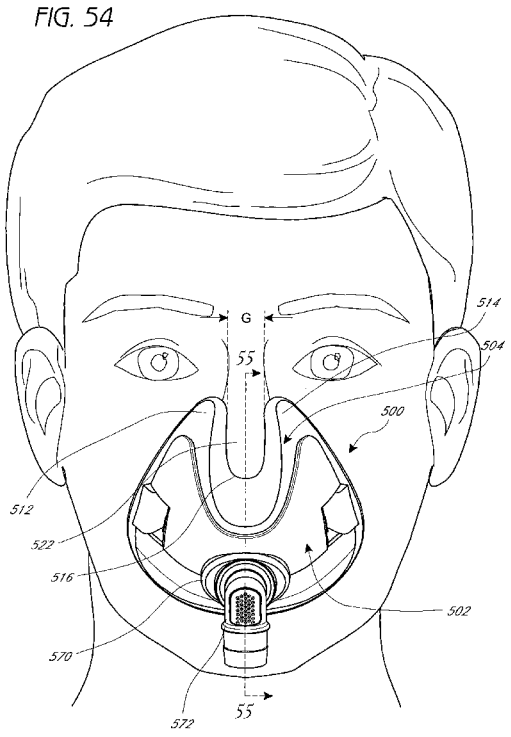

(57) Abstract: An interface for positive pressure therapy includes a mask assembly and a headgear assembly. The mask assembly comprises a mask seal that is adapted to underlie the nose and extend up the lateral sides of the nose to define an upwardly open valley in which the nose sits and wherein the nose of the user is exposed. The mask seal has a primary seal below the nose and a secondary seal alongside the nose.

WO 2013/066195 A1

UG, ZM, ZW), Eurasian (AM, AZ, BY, KG, KZ, RU, TJ, TM), European (AL, AT, BE, BG, CH, CY, CZ, DE, DK, EE, ES, FI, FR, GB, GR, HR, HU, IE, IS, IT, LT, LU, LV, MC, MK, MT, NL, NO, PL, PT, RO, RS, SE, SI, SK, SM, TR), OAPI (BF, BJ, CF, CG, CI, CM, GA, GN, GQ, GW, ML, MR, NE, SN, TD, TG).

Published:

— *with international search report (Art. 21(3))*

2012331716 07 Jun 2017

INTERFACE COMPRISING A NASAL SEALING PORTION

CROSS-REFERENCE TO RELATED APPLICATIONS

The present application claims the priority benefit of U.S. Provisional Patent Application No. 61/553,872, filed on October 31, 2011, which is hereby incorporated by reference in its entirety. The present application also is a continuation-in-part of PCT/IB2012/000858, filed on April 13, 2012, which claims the priority benefit of U.S. Provisional Patent Application No. 61/476,188, filed on April 15, 2011, U.S. Provisional Patent Application No. 61/504,295, filed on July 4, 2011 and U.S. Provisional Patent Application No. 61/553,067, filed on October 28, 2011, each of which is hereby incorporated by reference in its entirety.

BACKGROUND OF THE INVENTION

Field of the Invention

The present invention generally relates to face masks that cover at least one of a nose and a mouth of a user to supply respiratory gas under positive pressure. More particularly, certain aspects of the present invention relate to such masks that have an improved nasal seal portion.

Description of the Related Art

Face masks can be used to provide respiratory gases to a user under positive pressure. In configurations in which both a mouth and a nose of a user are covered, the full face mask typically will overlie a bridge of the nose. Generally, a single seal will circumscribe the nose and the mouth of the user. Such a seal passes over a bridge of the user's nose.

Such full face masks commonly are secured to a head of the user with headgear. In order to sufficiently reduce leakage, the headgear typically is tightened, which results in an elevated pressure being exerted on a bridge of a user's nose. In other words, as the headgear is tightened, the silicone seal typically applies a progressively increasing load on the bridge of the nose. The pressure can be a source of discomfort and, in some circumstances, can lead to pressure sores over time.

SUMMARY OF THE INVENTION

It is an object of the present disclosure to provide one or more constructions and/or methods that will at least go some way towards improving on the above or that will at least provide the public or the medical profession with a useful choice.

Accordingly, an interface is provided for use in providing positive pressure respiratory therapy. The interface comprises a mask assembly comprising a mask seal and a mask base. The mask assembly is configured to be fully positioned lower than a bridge of a nose of a face of a user and the mask assembly is configured to provide an

2012331716 07 Jun 2017

exposed tip of the nose of the user. The mask base comprises a central portion and a pair of wings sweeping rearwardly of the central portion. The wings have a greater vertical expanse than the central portion. An opening for a connector is formed on the mask base in the central portion. The mask seal is connected to the mask base. The mask seal comprises a thickened region adjacent to the mask base. The mask seal comprises at least one oral opening on a lower portion and at least one nasal opening on an upper portion. The at least one oral opening is positioned opposite of the opening for the connector and the at least one nasal opening is positioned between the opening for the connector and the oral opening in a front to back direction. The mask seal comprises a first paddle and a second paddle. An upper surface is positioned between the first paddle and the second paddle such that an upwardly-open valley is defined by the first paddle, the upper surface and the second paddle. At least a portion of the at least one nasal opening is positioned on the upper surface within the valley. The first paddle comprises a first pocket and the second paddle comprises a second pocket. The first and second pockets are in fluid communication with a chamber defined within the mask assembly. The paddles extend upward to some extent along lateral sides of the nose.

In some configurations, the mask seal is adapted to seal under the nose of the user, along a portion of a face of the user adjacent to the nose and around a mouth of the user.

In some configurations, the mask assembly is configured to not cover any forward facing portion of the nose of the user.

In some configurations, the upper surface is hammocked between inner portions of the first and second paddles.

In some configurations, downward pressure on the upper surface causes the first and second paddles to deflect toward each other.

In some configurations, the seal member comprises a rear surface that is adapted to contact the face of the user and the rear surface comprises a first protrusion and a second protrusion.

In some configurations, at least a portion of the first protrusion and at least a portion of the second protrusion are positioned vertically between the upper surface and an uppermost portion of the at least one oral opening.

In some configurations, the portion of the first protrusion comprises a first peak and wherein the portion of the second protrusion comprises a second peak.

In some configurations, the first peak and the second peak are positioned vertically between a portion of the at least one nasal opening and the at least one oral opening.

In some configurations, the first peak and the second peak are positioned vertically closer to the at least one nasal opening than to the at least one oral opening.

2012331716 07 Jun 2017

In some configurations, the mask seal is adapted to anchor on two locations of the face.

In some configurations, the mask seal is configured to anchor below the lower lip and below the nose.

In some configurations, the mask seal is configured to anchor below the lower lip but above the chin and below the nose.

In some configurations, the two locations are lower than the bottom of the nose but the mask seal extends upward beyond the bottom of the nose.

In some configurations, the mask seal is adapted to seal against the face in locations vertically above the uppermost anchoring location.

In some configurations, the upper surface slopes downward and rearward in the region surrounding the at least one nasal opening.

In some configurations, the at least one nasal opening comprises a nasal pad insert.

In some configurations, the nasal pad insert is formed of a material different from the mask seal.

In some configurations, the nasal pad insert is secured to the mask seal at a recessed pad support region.

In some configurations, the nasal pad insert and the mask seal comprise correlated keying features.

In some configurations, the nasal pad insert and the mask seal have a sealed interface generally surrounding the at least one nasal opening.

In some configurations, the nasal pad insert comprises a recessed central portion.

In some configurations, the recessed central portion is positioned generally forward of the at least one nasal opening.

In some configurations, outer peripheral portions have an increased rigidity relative to inwardly facing portions of the first paddle and the second paddle.

In some configurations, the outer peripheral portions have an increased thickness relative to the inwardly facing portions of the first paddle and the second paddle.

In some configurations, the first paddle comprises a first ridge positioned between an outerwardly facing surface and an inwardly facing surface and the second paddle comprises a second ridge positioned between an outwardly facing surface and an inwardly facing surface, the first and second ridge having an increased rigidity relative to the inwardly facing surface.

In some configurations, the first paddle comprises a first ridge positioned between an outerwardly facing surface and an inwardly facing surface and the second paddle comprises a second ridge positioned between an outwardly facing surface and an

2012331716 07 Jun 2017

inwardly facing surface, the first and second ridge having an increased thickness relative to the inwardly facing surface.

In some configurations, the interface comprises a headgear assembly adapted to provide a slightly upward force application between the mask assembly and the face of the user.

In some configurations, the headgear assembly is configured to adjust an angle of the mask assembly.

In some configurations, the headgear does not include a T-piece.

In some configurations, the mask assembly and the headgear assembly are configured such that no portion of the mask assembly or the headgear assembly will contact the face of the user at any location vertically above the eyes at a location horizontally between the outsides of the eyes.

In some configurations, the mask assembly comprises at least one nasal prong.

In some configurations, the at least one nasal prong is inclined toward a medial vertical plane of the mask assembly.

BRIEF DESCRIPTION OF THE DRAWINGS

These and other features, aspects and advantages of embodiments of the present invention will be described with reference to the following drawings.

Figure 1 is front view of a user wearing an interface that is arranged and configured in accordance with certain features, aspects and advantages of the present invention.

Figure 2 is a side view of a user wearing the interface of Figure 1.

Figure 3 is a perspective view of a mask seal and mask seal clip of the interface of Figure 1.

Figure 4 is a side view of the mask seal and mask seal clip of Figure 3.

Figure 5 is a rear perspective view of the mask seal clip of Figure 3.

Figure 6 is a rear elevation view of the mask seal clip of Figure 3.

Figure 7 is a side elevation view of the mask seal clip of Figure 3.

Figure 8 is a top plan view of the mask seal clip of Figure 3.

Figure 9 is a front elevation view of the mask seal and mask seal clip of Figure 3.

Figure 10 is a rear elevation view of the mask seal and mask seal clip of Figure 3.

Figure 11 is a side elevation view of the mask seal and mask seal clip of Figure 3.

Figures 12A-12D are enlarged section views of a portion of the mask seal and mask seal clip of Figure 3.

Figure 13 is an exploded front perspective view of the mask seal, mask seal clip and mask base of the interface of Figure 1.

2012331716 07 Jun 2017

Figure 14 is a section view of the mask seal, mask seal clip and mask base of Figure 13.

Figure 15 is a side elevation view of the mask seal, mask seal clip and mask base of Figure 13.

Figure 16 is a top plan view of the mask seal, mask seal clip and mask base of Figure 13.

Figure 17 is a perspective view of the connection port assembly of Figure 1.

Figure 18 is a side elevation view of the connection port assembly of Figure 17.

Figure 19 is a rear elevation view of the connection port assembly of Figure 17.

Figure 20 is a sectioned side elevation view of the connection port assembly of Figure 17.

Figure 21 is a sectioned perspective view of the connection port assembly of Figure 17.

Figure 22 is a perspective view of the clip assembly of Figure 1.

Figure 23 is a sectioned view of the clip assembly of Figure 22.

Figure 24 is a sectioned view similar to the sectioned view of Figure 12 showing a mask seal configured to roll under a portion of a mask seal clip 112.

Figure 25 is a sectioned view similar to the sectioned view of Figure 14, wherein the mask seal clip has a reduced dimension.

Figure 26 is a sectioned view similar to the sectioned view of Figure 14, wherein the mask seal clip is omitted.

Figure 27 is a further sectioned view similar to the sectioned view of Figure 14, wherein the mask seal clip is omitted.

Figure 28 is a graphical depiction illustrating a relationship between load (or force) on a user's body as a function of mask extension.

Figure 29 is a perspective view a backbone compatible with the headgear assembly of Figures 1 and 2.

Figure 30 is an enlarged view of the end region of a lower arm of Figure 29.

Figure 31 is an enlarged cross-sectional view of the end region of Figure 30.

Figure 32 is a perspective view of a mask assembly comprising a mask, clips, and straps.

Figure 33 is a side view of one of the two clips of Figure 32.

Figure 34 is an exploded view of the clip of Figure 33.

Figure 35 is a top view of the inner catch of the clip of Figure 33.

Figure 36 is a front view of a mask base having two mounting posts, and one inner catch of a clip mounted to the left mounting post.

2012331716 07 Jun 2017

Figure 37 is a front view of another configuration of a mask base having two mounting posts, and another configuration of a clip mounted to the mask base's left mounting post.

Figures 38-47 are additional configurations of clips and associated masks and mounting posts.

Figure 48 is a side view of another configuration of a swivel assembly.

Figure 49 is an exploded view of the swivel assembly of Figure 48.

Figure 50 is a cross-sectional view taken along line 50-50 of Figure 48.

Figure 51 is a cross-sectional view taken along line 51-51 of Figure 48.

Figure 52 is a side view of the backbone of Figure 29 attached to a user's head.

Figure 53 is a rear perspective view of the backbone of Figure 29 attached to a user's head.

Figure 54 is a front elevation view of a mask configuration positioned on a face of a user.

Figure 55 is a sectioned view of the mask configuration taken along the line 55-55 in Figure 54.

Figure 56 is a perspective view of the mask configuration of Figure 54.

Figure 57 is a rear perspective view of the mask configuration of Figure 54.

Figure 58 is a rear view of the mask configuration of Figure 54.

Figure 59 is a rear view of a mask configuration having a different mask seal relative to the mask configuration of Figure 54.

Figure 60 is a rear perspective view of another mask configuration having a different mask seal relative to the mask configurations of Figures 54 and 59.

Figure 61 is a side elevation view of the mask configuration of Figure 54.

Figure 62 is a section taken along the line 62-62 in Figure 61.

Figure 63 is a rear view of a mask seal of the mask configuration of Figure 54.

Figure 64 is a side view of the mask seal of the mask configuration of Figure 54.

Figure 65 is a front view of the mask seal of the mask configuration of Figure 54.

Figure 66 is a front view of another mask configuration.

Figure 67 is a perspective view of the mask configuration of Figure 66 with a headgear assembly attached.

Figure 68 is a side view of the mask configuration and headgear assembly of Figure 67.

Figure 69 is a rear perspective view of the mask configuration and headgear assembly of Figure 69.

Figure 70 is a perspective view of a face of a user.

Figure 71 is front view of mask configuration shown in position on a user.

2012331716 07 Jun 2017

Figure 72 is a perspective view of the mask configuration shown in position on a user.

Figure 73 is a front view of the mask configuration of Figure 71, shown without a connector.

Figure 74 is s side view of the mask configuration of Figure 71, shown without a connector.

Figure 75 is a side sectioned view of the mask configuration of Figure 71.

Figure 76 is a rear view of the mask configuration of Figure 71.

Figure 77 is a partially exploded front perspective view of the mask configuration of Figure 71.

Figure 78 is a partially exploded rear perspective view of the mask configuration of Figure 71.

Figure 79 is a sectioned view of the mask configuration of Figure 71.

Figure 80 is a front view of the mask seal of the mask configuration of Figure 71 showing different regions of thickness.

Figure 81 is a rear view of the mask seal of the mask configuration of Figure 71 showing different regions of thickness.

Figure 82 is a side view of the mask configuration of Figure 71 showing different regions of thickness.

Figures 83-88 are cross sections taken through the mask configuration of Figure 71 at the elevations shown on the mask seal in Figure 81.

Figures 89-109 are illustrations of different headgear assemblies that can be used with the mask assembly of Figure 71.

Figure 110 is a front perspective view of another mask configuration.

Figure 111 is a rear perspective view of the mask configuration of Figure 110.

Figure 112 is a sectioned side view of the mask configuration of Figure 110.

Figure 113 is a rear perspective view of the mask configuration of Figure 110.

Figures 114-119 are sectioned views taken along the lines indicated in Figure 113.

Figure 120 is a rear view of the mask configuration of Figure 110 with different regions of thickness indicated.

DETAILED DESCRIPTION OF THE PREFERRED EMBODIMENT

With reference initially to Figures 1 and 2, an interface 100 is shown in position on a user U. The interface 100 comprises an interface that can be used in the field of respiratory therapy. The interface 100 has particular utility with forms of positive pressure respiratory therapy. For example, the interface 100 can be used for administering continuous positive airway pressure ("CPAP") treatments. In addition, the interface 100 can be used with variable positive airway pressure ("VPAP") treatments and

2012331716 07 Jun 2017

bi-level positive airway pressure ("BiPAP") treatments. The interface can be used with any suitable CPAP system.

The interface 100 can comprise any suitable mask configuration. For example, certain features, aspects and advantages of the present invention can find utility with nasal masks, full face masks, oronasal masks or any other positive pressure mask. The mask illustrated in Figure 1 is a full face mask. The illustrated interface 100 generally comprises a mask assembly 102, a connection port assembly 104 and a headgear assembly 106.

With reference to Figure 13, the mask assembly 102 generally comprises a mask seal 110, which can include a mask seal clip 112, and a mask base 114. As will be described, the mask seal clip 112 preferably connects the mask seal 110 to the mask base 114. While the illustrated mask seal 110 and mask seal clip 112 are formed separately and secured together, in some configurations, the mask seal 110 and the mask seal clip 112 can be integrated into a single component. In some configurations, the mask seal 110 is overmolded onto the mask seal clip 112.

With reference to Figure 3, the mask seal clip 112 is relatively more rigid, stiffer or more inflexible than the mask seal 110. In some configurations, the mask seal clip 112 is formed of a polycarbonate material. In some configurations, at least a portion of the mask seal clip 112 is formed of a polycarbonate or other rigid or semi-rigid material. In some configurations, the mask seal clip 112 is formed at least partially of silicone or another suitable material. In such configurations, at least the silicone portion of the mask seal clip 112 may be formed to be relatively thicker compared to the more flexible portions of the mask seal 110. The mask seal clip 112 provides structural support to the mask seal 110 in the illustrated configuration.

As shown in Figure 14, the mask seal clip 112 can define a large portion of the mask assembly 102. As shown, the illustrated mask base 114 overlies a significant portion of the mask seal clip 112. With reference to Figures 25-27, the mask assembly 102 can be configured with differing constructions, as desired. For example, with reference to Figure 25, the mask seal clip 112 extends a limited amount from the interface with the mask seal 110. In the configuration illustrated in Figure 25, the mask base 114 overlies at least a portion of the mask seal clip 112 while the mask seal clip 112 defines a very limited rim-shaped configuration about a portion of the mask seal 110.

With reference to Figure 26, the mask seal clip is omitted in its entirety and the mask seal 110 is overmolded directly onto the mask base 114. In some configurations, however, the mask seal 110 and the mask base 114 can be configured such that the two components can be separated. For example, as shown in Figure 27, the mask seal 110 can comprise a peripheral flange 111 while the mask base 114 can comprise a peripheral

2012331716 07 Jun 2017

channel 115 that receives the peripheral flange 111 such that the mask seal 110 can be removably secured to the mask base 114. In some configurations, other suitable manners can be used to secure the mask seal 110 to the mask base 114. Moreover, the illustrated configuration of Figure 27 shows an embodiment without a mask seal clip 112; the mask seal clip 112 and the mask base 114 have been combined into the mask base 114.

With reference to Figure 5, the illustrated mask seal clip 112 comprises a substantially cup-shaped configuration. A proximal end 120 defines an open end of the illustrated mask seal clip 112 while a distal end 122 defines a generally closed end of the illustrated mask seal clip 112. In the illustrated configuration, the proximal end 120 is generally circumscribed by a lip 124. The lip 124 is generally pentagonal when viewed from the back (see Figure 5). As shown in Figure 7, a wall 126 generally sweeps forward in an arcuate manner. The arcuate shape to the wall 126 provides a three dimensional configuration to the illustrated mask seal clip 112.

With continued reference to Figure 7, an upper portion 130 of the illustrated mask seal clip 112 is generally arcuate in configuration. In addition, the generally arcuate configuration of the illustrated mask seal clip 112 is configured to accommodate larger noses while not extending upward over the nose to as great an extent as the mask seal 110, as shown in Figures 1 and 2.

With initial reference to Figure 3, the upper portion 130 of the illustrated mask seal clip 112 preferably comprises two arcuate dimensions. First, an arc length 132 can be defined along an upper extremity of the upper portion 130 of the illustrated mask seal clip 112. The arc length 132 can be defined between inflection points 134 found along a perimeter of the illustrated mask seal clip 112.

As shown in Figure 7, the upper portion 130 of the illustrated mask seal clip 112 also comprises a side profile radius 136. As shown, the upper portion 130 can have a slightly increasing side profile radius 136 such that the radius increases slightly as a distance from the upper end increases. In some configurations, the upper portion 130 can comprise a substantially constant side profile radius 136 or a decreasing side profile radius. Advantageously, the slightly increasing side profile radius 136 provides an increased volume in the mask 100 proximate the user's nose.

With reference to Figure 3 and Figure 6, the mask seal clip 112 preferably comprises at least two recesses 140. In the illustrated configuration, the mask seal clip 112 comprises two recesses 140 that are disposed on two lateral sides of a generally vertical center plane CP (see Figure 6). The generally vertical center plane CP preferably corresponds to a mid-sagittal plane of the user and splits the illustrated mask seal clip 112 into substantially mirror-image halves. The two recesses 140 define two generally enclosed pockets in the illustrated mask seal clip 112. The illustrated recesses 140

2012331716 07 Jun 2017

comprise further recesses 142 that are used to provide adequate clearance for reasons that will be discussed below while limiting an amount of encroachment into a nasal region of a chamber defined by the mask assembly 102.

The illustrated mask seal also comprises a generally central passage 144 that is defined by a wall 146. In the illustrated configuration, the wall 146 generally encloses the passage 144. Preferably, the wall 146 is generally cylindrical in configuration and extends through the wall 126. Other configurations are possible.

With reference to Figure 14, the mask seal 110 comprises a flexible portion that extends away from the proximal end 120 of the mask seal clip 112. In the illustrated configuration, the mask seal 110 is overmolded onto the mask seal clip 112 such that the mask seal 110 and the mask seal clip 112 combine to form an integrated and preferably non-separable assembly. In some configurations, attempts to separate the mask seal 110 and the mask seal clip 112 result in the destruction of the interface between the components and/or destruction of one or both of the mask seal 110 and the mask seal clip 112. As described above, other assemblies also can be used to connect the mask seal clip 112 to the mask seal 110. The illustrated configuration, however, advantageously results in a construction that is easy to clean and maintain.

With reference to Figure 4, the mask seal clip 112 preferably is arranged such that it is generally flush with an inner rim 150 of the mask seal 110. In the illustrated configuration, the mask seal 110 comprises a relatively small radius portion 152 that joins an upper portion 154. The upper portion 154 of the mask seal 110 is configured to extend over a nasal region of the user. In some configurations, the upper portion 154 is configured to extend over a nasal bridge region of the user U.

The upper portion 154 is connected with a lower portion 156 of the mask seal 110. The lower portion 156 extends laterally outward from the mask seal clip 112 as shown in Figure 9. In addition, the lower portion 156 wraps rearward and inward, as shown in Figures 4 and 10 respectively. Together, on a proximal side of the full face mask assembly 102, the upper portion 154 and the lower portion 156 combine to define a face contacting flange 160, which is shown in Figure 10. The face contacting flange 160 is configured to underlie a lower lip of the user, extend along the outside of the mouth, extend upward along the cheekbones and extend across the bridge of the nose of the user. Thus, the illustrated face contacting flange 160 defines a generally tear-drop shaped opening 162. When the mask assembly 102 is seated on the face of the user, the flange 160 will lie flat over the bridge of the nose, the cheekbones, the outside of the mouth and below the lower lip of the user. With a supply of positive pressure air, the mask seal 110 will balloon and seal against the face of the user to reduce or eliminate the likelihood of leakage between the flange 160 and the face of the user.

2012331716 07 Jun 2017

As shown by the dashed lines in Figure 11, the upper portion 154 of the mask seal 110 is designed to roll over onto an outer surface 170 of the mask assembly 102. In the illustrated configuration, the outer surface of the mask seal 110 smoothly rolls into abutment with the outer surface of the mask seal clip 112 such that the outer surface of the mask seal clip 112 forms a support surface. In some configurations, the outer surface 170 onto which the upper portion 154 rolls comprises at least a portion of the outer surface of the mask seal clip 112. In some configurations, the outer surface 170 onto which the upper portion 154 rolls comprises almost exclusively the outer surface of the mask seal clip 112. In some configurations, the upper portion 154 rolls onto another portion of the mask seal 110. In some configurations, the upper portion 154 rolls onto the mask seal base 114.

With reference to Figure 12, to assist with the rolling of the upper portion 154, the upper portion 154 can have a varying thickness or a varying stiffness. In the configuration shown in Figure 12, the upper portion 154 comprises a thick/thin/thick configuration. In other words, to induce the upper portion 154 to roll in a region between the face contacting flange 160 and the small radius 152 proximate the mask seal clip 112, a reduced stiffness region 172 can be incorporated. In the illustrated configuration, the reduced stiffness region 172 is incorporated into the mask seal 110. The reduced stiffness region 172 reduces or eliminates the likelihood of the mask seal 110 buckling or adversely deforming in a region other than the desired region for rolling.

While the illustrated configuration uses a region of reduced thickness, other means for providing the reduced stiffness region 172 also can be used to induce rolling of the seal member 110. For example, the material of the seal member 110 can be configured to have a reduced stiffness through material selection or material properties. In addition, a composite of materials can be used to provide a region of reduced stiffness or rigidity. Moreover, a combination of any suitable techniques can be used. Nevertheless, the illustrated region 172, which is configured with reduced thickness, provides a simple manner of achieving the region of reduced stiffness 172. In addition, by adjusting the stiffness of the reduced stiffness region 172, the force required to induce rolling of the region 172 can be controlled, which controls the force applied against the nose of the user. For example, by varying the stiffness, movement can become increasingly or decreasingly resisted over the range of movement.

When the upper portion 154 comprises the region of reduced stiffness 172, the upper portion 154 of the mask seal 110 tends to balloon outward under internal pressures, such as those encountered during positive pressure therapy regimens, which ballooning is believed to be caused by the region of reduced stiffness 172 that defines a large area of silicone without significant structure. With reference to Figure 4 and Figure 12, to reduce the prevalence of ballooning in the upper portion 154 and to provide

2012331716 07 Jun 2017

enhanced structure in the upper portion 154, a reinforcing component or components, such as a band 174, can be positioned along at least a portion of the upper portion 154. The band 174 can be a component formed of a material that is more rigid than, or that features increased stiffness relative to, the silicone or other material forming the mask seal 110. For example, a region of significantly increased thickness relative to the region of reduced stiffness 172, where the region is formed of the same material forming the mask seal 110, can be used to increase the stiffness of the reinforcing component or components.

In some configurations, the band 174 can be a separately formed component that is at least partially encased by the material of the mask seal 110. In the illustrated configuration, the band 174 can be a comolded plastic component or the mask seal 110 can be overmolded onto the band 174. In some configurations, the band 174 can be defined by a portion of the upper portion 154 that has enhanced stiffness relative to surrounding regions. For example, but without limitation, the band 174 can be defined by a portion of increased thickness, a portion of differing materials or material properties that result in increased stiffness or the like.

With reference to Figure 9, the band 174 extends along at least a portion of the upper portion 154 of the mask seal 110. The upper portion 154 of the mask comprises an apex 180 when viewed from the front. The apex 180 can be defined as a tip, a top and an angular summit of the mask seal 110, which apex 180 is positioned in proximity to the nose of the user when in use. A first wall 182 and a second wall 184 converge at the apex 180 in the illustrated configuration.

In some configurations, at least a portion of the first wall 182 and at least a portion of the second wall 184 are reinforced by one or more components or structures, such as the band 174. In the illustrated configuration, the reinforcing component or components, such as the band 174 for example, reinforces at least a portion of the first wall 182 and at least a portion of the second wall 184. In some configurations, the reinforcing component or components, such as the band 174 for example, reinforces at least a portion of the first wall 182, at least a portion of the second wall 184 and the apex 180.

With continued reference to Figure 9, the illustrated band 174 has a first end 186 and a second end 188 that is opposite to the first end 186. In some configurations, the band 174 can be formed separate of the mask seal clip 112 and attached to the mask seal clip 112 by one or more flexible components. In some configurations, the band 174 can be connected by a mechanical hinge structure to the mask seal clip 112. In the illustrated configuration, the first end 186 and the second end 188 are positioned on the same side of the hinge axis H as the apex 180. Preferably, the first end 186 and the second end 188 are spaced away from the hinge axis H toward the apex 180.

2012331716 07 Jun 2017

As shown in Figure 12, the bend 152 and the stiffer region (e.g., region of thicker cross section) adjacent to the region of reduced stiffness 172 help to initiate rolling of the region of reduced stiffness 172. In other words, a controlled buckling of the region of reduced stiffness 172 occurs with the assistance of the adjacent stiffer portions. In addition, positioning an edge of the relatively more rigid mask seal clip 112 adjacent to the bend 152 further helps to induce rolling in the reduced stiffness region 172. In some configurations, the region of reduced stiffness 172 is bounded by a first boundary and a second boundary, wherein the first boundary and the second boundary have an increased stiffness relative to the region of reduced stiffness. In the illustrated configuration, for example, the first boundary is defined by or alongside the band 174 while the second boundary is defined by or alongside the bend 152. In some configurations, the second boundary can be defined by or alongside an edge of the more rigid mask seal clip 112. In some configurations, the second boundary can be defined along a portion of the mask seal 110 positioned between the mask seal clip 112 and the region of reduced stiffness 172.

As the upper portion 154 of the mask seal 110 is displaced about the hinge axis H, the roll increases in size. In other words, as the first boundary initially moves toward the second boundary, a roll is formed in the mask seal 110. As the first boundary continues to move toward the second boundary, the roll continues to increase in size. Thus, in the illustrated configuration of Figure 11, the roll defined in the upper portion 154 starts at nothing and progressively increases during displacement of the upper portion 154 as shown in dashed lines. Preferably, the rolling between the first boundary and the second boundary creates a single bend or inflection between the first boundary and the second boundary. The single bend results in legs approaching the bend location that increase in size as the first boundary moves toward the second boundary. In other words, the rolling created by movement of the first boundary toward the second boundary preferably does not result in a fan-folding appearance, such as a pleated configuration.

With reference again to Figure 3, the mask seal 110 can have a geometry that helps facilitate continued rolling of the region of reduced stiffness 172 following the initiation of the rolling. Arc lengths can be defined in general from a first intersection of the hinge axis H with the mask seal 110, up and over the upper portion 154 of the mask seal 110, and back down to a second intersection of the hinge axis H with the mask seal 110.

As shown in Figure 3, the illustrated mask seal 110 comprises at least a first arc length A (shown in dashed line), a second arc length B (shown in dash-dot chain line) and a third arc length C (shown along a base of the band 174). The first arc length A preferably is longer than the arc length of the mask seal clip 112 directly adjacent to the

2012331716 07 Jun 2017

first mask arc length A. The second arc length B is positioned between the first arc length A and the third arc length C and the second arc length B preferably is shorter than the third arc length C and longer than the first arc length A. In some embodiments, the arc lengths steadily increase from the bend 152, or another region close to the outer surface 170, proximal toward the band 174. In other words, as an angle α (see Figure 4) increases from the first arc length A, the arc length generally increases. In some configurations, the arc lengths can be substantially constant from front to rear (i.e., as the angle α increases); however, by increasing the arc lengths away from the portion that initiates the roll, further movement of the apex 180 in a distal direction results in continued rolling of the mask seal 110 over itself and over the outer surface 170, as shown in Figure 11.

With reference again to Figure 4, the upper portion 154 of the illustrated mask seal 110 also comprises a variable radius when viewed from the side profile. As shown, R1>R2>R3. Thus, in the illustrated mask seal 110, the radius decreases from proximal to distal as the angle increases. In some configurations, the radius need not decrease in this manner; however, the decreasing radius is believed to aid in rolling of the mask seal 110.

Moreover, a radius r1 of the mask seal clip 112 from the hinge point H preferably is smaller than the radius R3 of the mask seal 110. Given the pliant nature of the mask seal 110, however, it is possible for the radius r1 and the radius R3 to be substantially the same while still providing for the mask seal 110 to roll over the mask seal clip 112. In the illustrated configuration, however, the difference between the radius r1 and the radius R3 results in an offset. The offset provides an ability to slightly increase the side profile radius 136, as described above, without significantly impacting the ability of the mask seal 110 to roll over the mask seal clip 112. If the offset were not provided, the ability to increase the side profile radius 136 would be very limited.

As discussed above, the flange 160 encircles the generally tear-drop shaped opening 162. As is known, hoop stress can be defined as circumferential stress in a cylindrically shaped part as a result of internal pressure. Thus, hoop stress increases as a ring attempts to expand. It is believed that hoop stress resulting from seating a respiratory mask can be a source of some discomfort to the user, especially in the region of the bridge of the nose. The lower portion 156 of the illustrated mask assembly 102 generally is secured in position while the nasal or upper portion 154 moves relative to the nose of the user. Because of the rolling action described above, the illustrated full face mask assembly 102 acts to roll away from the nose, which decreases the incidence of increasing hoop stress, especially around the bridge of nose. Thus, the rolling mask configuration provides a means for maintaining or reducing hoop stress during seating of the mask.

2012331716 07 Jun 2017

As discussed above and as shown in Figure 11, the upper portion 154 of the illustrated mask seal 110 rolls over the outer surface 170 in the illustrated configuration. The rolling over an external mask surface makes use of the positive pressure present within the full face mask assembly because the increased air pressure enhances the ability of the mask seal to roll on itself (i.e., the air pressure decreases a surface tension between the two surfaces of the mask seal that slide relative to each other during rolling) and the slight ballooning effect helps to reduce the likelihood of buckling, creasing or undesired folding of the mask seal 110. Furthermore, in some configurations, the external roll over can provide a visual cue of the degree or angle of displacement of the upper portion 154 of the mask seal 110 relative to the lower portion 156 of the mask seal 110.

In order to provide an enhanced indication to the user of the extent to which the upper portion 154 of the mask has rolled, it is possible to employ a visual indicator. For example, in some configurations, a scale can be imprinted, embossed or otherwise arranged on or near the reduced stiffness region 172. In some configurations, a scale can be positioned along a portion of the mask 100 over which the reduced stiffness region 172 will roll. For increased fidelity, the scale preferably is positioned in a central location such that the extent to which the reduced stiffness region 172 rolls can be maximized. The scale can be a numerical scale or a color gradient scale, for example but without limitation.

In some configurations, a ratchet or lock mechanism can be integrated with the mask such that the reduced stiffness region 172 can be set at a desired roll point. For example, a ratchet mechanism with a series of teeth that engage a closure member (e.g., ziptie locking ratchets) can be used. When the upper portion 154 of the mask is displaced about the hinge point, the lock mechanism enables the upper portion 154 to be retained in position when the mask 100 is removed from the face of the user U. Preferably, the lock mechanism allows that locked position to be released easily as desired such that, if the mask is moved too far, the upper portion can be relaxed into a better fitting position. Thus, the user can set the extent to which the upper portion 154 rolls once and each subsequent use would result in the same level of roll.

By rolling, the upper portion 154 (i.e., the portion of the seal member that contacts the bridge of the nose) moves as increasing pressure is applied by the flange 160 of the mask against the face of the user. As a result of the movement, the force exerted by the upper portion 154 upon the bridge of the nose is substantially constant over a wide range of pressures exerted by the lower portion 156 against the rest of the face of the user. Similarly, the force required to cause the upper portion 154 to move is substantially constant. As shown in Figure 28, the illustrated configuration results in a full 25 mm change in position of the upper portion with an increase of less than about

2012331716 07 Jun 2017

0.5 N of force associated with that range of movement. Because the force applied to the nose is generally constant over a range of angles and associated upper portion displacement, the force applied to the bridge of the nose does not vary significantly at various headgear tension levels. Again, such a result is shown in Figure 28, wherein the total change in force over the range of 5 mm to 25 mm of movement at the apex 180 results in a force change of about 0.2 N. In addition, because the force applied to the nose is generally constant over a range of angles, the mask can be adjusted to improve fitting to a variety of facial geometries while limiting the pressure exerted against the sensitive bridge of the nose region.

When compared to constructions featuring pleated geometries, the use of a rolling configuration provides marked improvement. First, external rolling rather than pleating reduced or eliminates the likelihood of the material of the mask seal encroaching into the chamber designed to contain the nose of the user. Thus, external rolling reduces the likelihood of contact with the nose of the user inside the chamber during movement of the upper portion 154 relative to the lower portion 156. Second, external rolling instead of pleating provides a clean appearance and decreases the number of external cavities, which is believe to improve the user's perception of the full face mask assembly when compared to pleated assemblies.

With reference to Figure 24, while the illustrated mask seal 110 rolls over the outer surface 170, the mask seal can be configured to roll inside the mask assembly. In other words, an internal roll over can be used in some configurations. The internal roll over is less desirable relative to the external roll over because the positive pressure tends to hinder rolling and because the rolling action tends to encroach into the chamber that receives the nose. On the other hand, the internal roll over provides a cleaner appearance relative to the external roll over because any ballooning of the seal member is contained within the mask seal clip.

With reference now to Figures 1 and 2, the mask assembly 102 includes the mask base 114, which is more rigid than the mask seal 110. The mask base 114 can be formed of any suitable material. In some configurations, the mask base 114 is formed of a polycarbonate material such that it is capable of flexing for connection with the mask seal 110 and/or the mask seal clip 112.

With reference now to Figure 14, the mask assembly 102 is shown with the mask base 114 secured to the mask seal 110. More particularly, in the illustrated configuration, the mask base 114 is secured to the mask seal clip 112 that is attached to the mask seal 110 in any suitable manner. In some configurations, the mask base 114 and the mask seal 110 or mask seal clip 112 are removably connected. In some configurations, the mask base 114 snaps together with one or both of the mask seal 110 and the mask seal clip 112. Preferably, the mask seal 110 and the mask seal clip 112

2012331716 07 Jun 2017

can be removed from the mask base 114 and a snap connection secures the mask seal clip 112 to the mask base 114.

With reference to Figure 14 and 15, the illustrated mask base 114 overlies at least a portion of the mask seal clip 112. In some configurations, the mask base 114 almost entirely covers the mask seal clip 112. In some configurations, the mask base 114 extends over more than half of the mask seal clip 112. When the mask base 114 overlies a substantial portion of the mask seal clip 112 or the mask seal 110, a double layer effect is created (e.g., the mask seal clip 112 and the mask base 114). The double layer effect provides increased insulation when a significant portion of the mask base 114 overlaps a significant portion of the mask seal clip 112 or the mask seal 110. The increased insulation provides a warmer inner portion (e.g., mask seal 110 and/or mask seal clip 112), which results in less rain out of humidity during use. Preferably, at least a portion of the mask seal clip 112 is exposed from under the mask base 114 such that the mask base 114 can be more easily separated from the mask seal clip 112. As shown in Figure 15, to aid in the separation of the mask base 114 from the underlying mask seal 110 and/or mask seal clip 112, the illustrated mask base 114 comprises a peripheral surface 200 on the proximal end. The mask base 114 is concave on the inside to accommodate the underlying components. In other words, the mask base 114 is bowl shaped in a distal direction relative to the proximal peripheral surface 200.

The peripheral surface 200 comprises one or more recessed portions 202. Preferably, the recessed portions 202 comprise at least two recessed portions 202 that are positioned on opposite sides of the mask base 114 from each other. The recessed portions 202 are configured to receive a thumb and a finger such that the mask base 114 can be more easily removed from the front of the underlying mask seal clip 112. While the recessed portions 202 can define means for grasping the assembly underlying the mask base 114 for removal of the mask base, other configurations can be used, such as outwardly extending tabs, protruding portions and the like, for example but without limitation. In addition, while the illustrated recessed portions 202 are disposed on opposing lateral sides of the mask base 114, the recessed portions 202 can be positioned on the top and bottom or on other regions as desired.

As shown in Figure 13, the mask base 114 preferably comprises an opening 210 that is defined by a wall 212. With reference to Figure 14 (which is a section through the mask seal 110, the mask seal clip 112, and the mask base 114), the wall 212 that defines the opening 210 through the mask base 114 preferably fits within the wall 146 that defines the passage 144 through the mask seal clip 112. As shown in Figure 14, the wall 212 can be axially coextensive with the wall 146. In addition, the dimensions and shapes of the walls 146, 212 can be such that the walls interact with each other to reduce relative slippage between the walls 146, 212 and to reduce the likelihood of the

2012331716 07 Jun 2017

mask seal base 114 inadvertently separating from the mask seal clip 112. In some configurations, the walls 146, 212 fit together and reduce the likelihood of leakage through the interface between the walls. Preferably, a taper lock secures the walls 146, 212 together.

With reference still to Figure 14, the wall 212 comprises a contoured inner surface 214. The contoured surface 214 can be radiused to receive a ball end 220 of a swiveling elbow 222, such as that shown in Figure 17. As better shown in Figure 18, the ball end 220 has a contoured surface 224 that can be snap fit into the contoured surface 214 formed in the mask base 114. The connection between the two contoured surfaces 214, 224 allows the surfaces to slide relatively freely with each other such that the position of the swiveling elbow 222 can be easily changed. In some configurations, the elbow 222 could be configured for rotation or swiveling without having a ball-joint configuration.

With reference again to Figure 13, the mask base 114 also comprises at least two pockets 230. The illustrated mask base 114 comprises two pockets 230. The pockets 230 recede into the mask base 114 and protrude rearward from the mask base 114. The pockets 230 are received within the recesses 140 of the mask seal clip 112. Overlying the further recesses 142 formed in the mask seal clip 112 are openings 232 that are defined by a surrounding wall 234.

The illustrated pockets 230 are formed such that one pocket 230 is formed on each lateral side of the mask base 114. The pockets 230 can be positioned to be symmetrical relative to the central plane CP, which plane substantially bisects the mask base 114. In some configurations, as shown in Figure 15, the pockets 230 have an enlarged vertical dimension 240 relative to a transverse dimension 242. Similarly, as shown in Figure 15, the openings 232 have an enlarged vertical dimension 244 relative to a transverse dimension 246.

In the illustrated mask base 114, the laterally inward portion of each pocket 230 comprises a support wall 250. The support wall 250 is positioned toward the center plane CP relative to normal to a base surface 248 of the pocket 230. Each of the pockets 230 is configured to receive a clip 252 (see Figure 22). Once the clip 252 is installed within the pocket 230, the support wall 250 helps to limit rotation of the clip 252 relative to the pocket 230. Moreover, the large vertical dimension helps users to locate the pocket 230 with the clip 252 during installation.

With reference to Figure 22, the clip 252 can have a two part construction: an outer cover 254 and an inner catch 256. Straps 260 can be secured to each clip 252 in any suitable manner. One suitable configuration is illustrated in Figure 2. In some configurations, the straps 260 can be sandwiched between the outer cover 254 and the inner catch 256. In some configurations, loops or openings or holes could be provided on the clips 252 through which the straps 260 are threaded. Preferably, one clip 252 can be

2012331716 07 Jun 2017

connected to both an upper strap and a lower strap of the headgear assembly 106. Such a configuration facilitates easy connection of the headgear assembly 106 to the full face mask assembly 102 and easy disconnection of the headgear assembly 106 from the full face mask assembly 102.

As shown in Figure 23, the clip 252 comprises a sloping surface 262. The sloping surface 262 can be positioned on the outer cover 254. The sloping surface 262 cooperates with the support wall 250 to help orient the clip 252 relative to the pocket 203 of the mask base 114.

The clip 252 includes an interlock feature 264. The interlock feature 264 is configured for insertion into the opening 232 defined in the pocket 230 of the mask base 114. The interlock feature 264 can engage in a snap-fit manner with a tab 236 defined along the wall 234 that defines the opening 232 in the mask base 114, as shown in Figure 13. Other manners of interlocking the clip 252 with the pocket 230 also can be used.

Referring to Figure 23, the interlock feature 264 of the illustrated clip 252 comprises a U-shaped component 268 that terminates in a release lever 266. The U-shaped end 268 protrudes a sufficient distance to allow the connection with the tab 236 but does not protrude so far as to allow the bottom of the further recess 142 in the mask seal clip 112 to stop proper insertion of the interlock feature 264 into the opening 232. The U-shaped end 268 initially makes contact with a wall of the opening 232 during connection of the clip 252 to the mask base 114. In the illustrated configuration, the U-shaped end 268 contacts the wall 234 of the opening 232 during insertion and the wall 234 guides the clip 252 into position within the pocket 230. The opening 232, or one or more surfaces that define the opening 232, generally align the clip 252 relative to the mask base 114 during connection of the clip 252 to the mask base 114.

The end of the release lever 266 protrudes through an opening 270 defined by a wall 272. Preferably, the end of the release lever 266 protrudes through the opening 270 a sufficient distance to allow easy manipulation of the release lever 266. Moving the release lever 266 in manner that closes the U-shape of the interlock feature 264 allows the interlock feature 264 to be removed from engagement with the tab 236 in the wall 234 that defines the opening 232 in the mask base 112.

Figures 32-39 illustrate additional configurations of clip assemblies 252 that are configured to secure a mask assembly 102 to a user's head. The clip 252 of Figures 32 and 33, for example has a raised edge 400 (sometimes referred to as a finger tab 400) that enables the user to easily detach the headgear 106 from the mask assembly 102. The raised edges 400 are oriented such that the user may merely pull them rearwardly to pop the clips 252 off of the mask base 114. Removing one or more clips 252 from the mask base 114 allows the mask assembly 102 to be easily removed from the user's

2012331716 07 Jun 2017

head. The raised edge 400 provides a grasping point during attachment and removal of the headgear 106 with respect to the mask assembly 102. For example, the user's thumb and index finger may be placed on opposite sides of the raised edge 400 during removal of the clip 252 from the mask assembly 102. In addition, the user may grip the clip 252 and maintain the grip throughout the mask fitting process. This eliminates the need to grasp blindly for the straps 260 during assembly. It also allows the user to attach the clip 252, remove it, and re-attach it while maintaining a grip on the raised edge 400.

Figure 34 shows an exploded view of the clip 252 of Figures 32 and 33. The clip 252 includes an outer cover 254 and an inner catch 256. The inner catch 256 includes one or more slots 402 to receive the distal end of the headgear straps 260. The inner catch 256 can also include several pressure bumps, such as those shown in connection with the configuration of Figures 38 and 39. The pressure bumps provide additional pressure against the outer cover 254 and inner catch 256, so that they are secured to one another. In one configuration, the headgear straps 260 are removable from the assembled clip 252.

The inner catch 256 includes an elongated slot 404, as shown in Figure 38. The slot 404 includes a circular opening 406 having a diameter larger than the width of the slot 404. The slot 404 and circular opening 406 can include chamfered recesses to help align the clip 252 to the mask assembly 102. The circular opening 406 facilitates attachment and removal of the clip 252 to the mask assembly 102, as will be discussed in greater detail below. Two channels 408 extend parallel to the sides of the slot 404, thereby defining slot walls 410 (sometimes referred to as clip levers) on either side of the slot 404. The channels 408 are sized to permit adequate flexing of the slot walls 410 during attachment and removal of the clip 252 from the mask assembly 102. In addition, the slot walls 410 extend along the longest dimension of the inner catch 256, towards top and bottom, which allows longer slot walls 410 to be employed. Longer slot walls 410 reduces the level of stress on the slot walls when fitting the clip over the mounting post.

One configuration of a mask base 114 suitable for use with the clip 252 of Figures 32-35 is illustrated in Figure 36. The mask base 114 includes two recesses 140 symmetrically positioned on opposite sides of the mask base 114. A mounting post 412 extends from the body of the mask base 114 within each recess 140. The mounting post 412 may be integrally formed with the mask base 114, or separately formed and secured to the mask base 114. The mounting post 412 can have a mushroom-shaped configuration to secure the clip 256 to the mask base 114 once the user snaps the clip 256 in place. The rounded top of the bulbous mushrooms-shaped post 412 helps locate and orient the central hole 406. As the clip 252 is pressed onto the post 412, the slot

2012331716 07 Jun 2017

walls 410 deflect outwardly, away from the post 412. Once the head of the post 412 clears the edge of the slot wall 410, the slot walls 410 snap back to their original position, thereby providing tactile, and sometimes audible feedback, that the clip 252 is properly attached to the mask assembly 102.

The mounting post 412 can also comprise an elongated, elliptical, elevated portion 414 (sometimes referred to as a lug or wing) that is sized to mate with the elongated slot 404 of the inner catch 256. The elongated, elevated portion 414 comprises a chamfered edge to help properly align the head gear 106 with respect to the mask assembly 102. The portion 414 also prevents the clip 252 from rotating with respect to the mask assembly 102. This helps assure constant tension on the headgear straps 260 while the user sleeps.

Figure 37 illustrates a partial assembly of yet another configuration to secure a clip 252 to a mask base 114 of a mask assembly. The clip 252 sits within a recess 140 of the mask base 114. A cylindrical, button-head post 412 extends from the surface of the mask base 114 within the recess 140. The post 412 allows slight rotation of the clip 252 when attached thereto due to its cylindrical configuration. However, as shown in Figures 38 and 39, the slot 404, channels 408 and slot walls 410 extend along the shorter planar direction of the inner catch 256, towards its front and back ends.

The inner catch 256 also includes several pressure bumps 414. As discussed above, the pressure bumps provide additional pressure against the outer cover 254 and inner catch 256, so that they are secured to one another.

Additional configurations of a clip 252 are illustrated in Figures 40-47. The clip 252 of Figure 40 includes three elongated, elliptical slots 404 and a finger tab 400. The finger tab 400 is used to create a lever to release the clip 252 from a mask assembly 102. The central slot 404 is sized to receive a mounting post 412 that extends from the outside surface of the mask body. One such suitable mounting post 412 is illustrated in Figure 43. The mounting post 412 includes a ridge 414 and two slots 416. As the clip 252 is pressed onto the mounting post 412, the outer portions of the post 412 flex towards each other due to the spacing provided by the slots 416. Once the ridge 414 clears the upper surface of the clip 252, the mounting post 412 snaps back to its original position, and the ridge 414 locks the clip 252 in place,

A similar configuration is shown in Figures 44-47. The clip 252 of Figure 45 does not include a finger tab and its central opening 404 has a rounder, more elliptical shape than the elongated slots of Figures 40-44.

All of the foregoing configurations simplify the procedure for securing the mask assembly 102 to the user's head. For example, the clips 252 allow the headgear 106 to open up so that it is not a closed loop. By opening up, the headgear 106 may be swung around the head rather than forcing the user to pull his head through it.

2012331716 07 Jun 2017

With reference to Figure 2, in addition to the straps 260, the headgear assembly 106 also comprises a back strap 280 and a top strap 282. Other head gear assemblies also can be used. The back strap 280 extends around the back of the head of the user U at a location generally above a nape of the neck but generally below the occipital protuberance. At a location rearward of the ear of the user, the back strap 280 forks into an upper arm 284 and a lower arm 286. The upper arm 284 arcs upward to a location above the ear of the user and then arcs downward to a location generally forward of the ear of the user. The lower arm 286 arcs downward to a location generally below the ear of the user and extends slightly forward of the ear.

The straps 260 can be connected to the back strap 280 in any suitable manner. In the illustrated configuration, the straps 260 connect to the upper arm 284 and the lower arm 286 respectively. Preferably, the upper arm 284 and the lower arm 286 are more rigid than the straps 260 such that the arms 284, 286 generally maintain shape as the headgear assembly 106 is being donned. In some configurations, each of the upper arm 284 and the lower arm 286 supports its own weight. In some configurations, each of the upper arm 284 and the lower arm 286 is structured to be tangle-free during donning. For example, the arms 284, 286 have sufficient torsion stiffness to reduce the likelihood of twisting when being put on.

Preferably, the straps 260 connect to at least one of the upper arm 284 and the lower arm 286 at a location forward of the ear. Such a configuration helps the user to locate the straps 260 without much difficulty. In addition, because the straps 260 in the illustrated configuration are embedded into the clips 252, the ends of the upper arms 284 and the lower arms 286 can comprise slots 290, 292 such that the straps 260 can be threaded through the slots 290, 292. In addition, the straps 260 can comprise an adjustment mechanism 294, such as a Velcro or buckle configuration. The adjustment mechanism 294 allows a force between the mask seal 110 and the face of the user U to be adjusted. Any suitable adjustment mechanism 294 can be used.

As shown in Figure 2, the top strap 282 preferably is flexible and has an adjustable length. The top strap 282 connects to the upper arms 284 through a slot 296 and reduces the likelihood of the upper arms 284 sliding down the head of the user and contacting the ears of the user. Preferably, the top strap 282 connects to the upper arms 284 at a location generally above the ears of the user.

Advantageously, as shown in Figures 1 and 2, the straps 260 exert a force in the direction of the arrow F while they connect to the mask base 114 by movement in the direction C, which direction is generally normal to the direction of the force F. In other words, the straps 360 are tensioned by pulling forward and the clips 252 are connected to the mask base 114 by movement in a direction normal to the forward pull. Such a configuration eases securement of the interface 100 on the face of the user.

2012331716 07 Jun 2017

In another configuration, the headgear assembly 106 includes a semi-rigid headgear 380 (as shown in Figure 29) to secure the mask assembly 102 to the user's head. The semi-rigid headgear 380 is formed as a composite structure comprising a semi-rigid strap 382 that is joined to a soft edging 384. For example, the soft edging 384 can be bonded to the semi-rigid strap 382 by plastic overmolding or by use of an adhesive. As shown in Fig. 29, the soft edging 384 can be butt-joined to the semi-rigid strap 382, without the soft edging 384 overlapping the semi-rigid strap 382, to maintain the continuous profile of the semi-rigid headgear 380. The semi-rigid strap 382 defines and maintains the semi-rigid headgear shape as tension is applied from the straps 260 to pull the mask assembly 102 towards the user's head. In other words, the semi-rigid strap 382 is sufficiently rigid along its planar axis to prevent its upper and lower arms 284, 286 from overly deforming under tension. The semi-rigid strap 382 can be made from a variety of rigid or semi-rigid materials, including plastic or metal. In some configurations, the semi-rigid strap 382 is made from PVC.

Especially in connection with a semi-rigid headgear assembly, it has been found that the shape holding, or self-supporting nature, can result in an overall assembly that is intuitive to fit. In particular, where the connection and/or headgear members are self-supporting such that they maintain a three-dimensional form, the headgear can be fitted in the correct orientation with very little if any instruction. In a self-supporting arrangement, the tendency of the straps to not tangle also reduces the time taken to fit the overall assembly.

As used herein, the term "semi-rigid" is used to denote that the headgear assembly is sufficiently stiff such that the headgear assembly 380 can assume a three-dimensional shape with dimensions approximating the head of the patient for which the headgear is designed to fit while also being sufficiently flexible to generally conform to the anatomy of the patient. For example, some of the other components (e.g., arms or straps) of the headgear assembly 380 may also be partially or wholly "semi-rigid" such that the components are capable of holding a three-dimensional form that is substantially self-supporting. A "semi-rigid" headgear assembly is not intended to mean that each and every component of the headgear assembly is necessarily semi-rigid. For example, the substantially three-dimensional form that the self-supporting headgear assembly 380 may assume may relate primarily to the rear and top portions of the headgear assembly 380. In addition, the semi-rigid headgear assembly 380 may include semi-rigid regions that extend forward of the ears and above the ears when placed on the head of the patient.

The left and right upper and lower arms 284, 286 may be formed of a semi-rigid material, as well. Where used herein, the semi-rigid materials may include molded

2012331716 07 Jun 2017

plastic or sheet materials that include but are not limited to homogeneous plastic materials and bonded non-woven fiber materials.

In some configurations, one or more of arms or straps are formed of a substantially inelastic material. The arms or straps can be formed of a semi-rigid, self-supporting material such that the semi-rigid headgear assembly 380 can assume a substantially three-dimensional shape and generally does not tangle. In some configurations, the material can comprise a laminate structure of both conformable and semi-rigid portions, for example but without limitation. The semi-rigid strap 382 may be of a self-supporting, resilient, substantially inelastic material, such as Santoprene, polyolefin, polypropylene, polyethylene, foamed polyolefin, nylon or non-woven polymer material for example but without limitation. In some configurations, the semi-rigid strap 382 is formed from the polyethylene or polypropylene families. The material can be a low density polyethylene such as Dowlex 2517, which is a linear low density polyethylene that has a yield tensile strength of 9.65 MPa, a break tensile strength of 8.96 MPa, and a flexural modulus – 2% secant of 234 MPa. The semi-rigid strap 382 preferably is formed of a material such that the semi-rigid headgear 380 is substantially shape-sustaining under its own weight regardless of its orientation. In some configurations, the semi-rigid strap 382 does not stretch more than approximately 6 mm under a 30 N tensile load. In some configurations, the semi-rigid strap 382 does not stretch more than approximately 3 mm under a 30 N tensile load.

In some configurations, the semi-rigid strap 382 is formed from non woven polyolefin (NWP), which is bonded (e.g., overmolded or laminated) with a polyolefin. In such configurations, the overmolded polyolefin material provides the principle shape sustaining properties. In addition, the softer NWP material is adapted to contact the skin and provide a desired comfort level. Furthermore, the NWP material may assist in providing the desired load bearing properties, such as the desired tensile load bearing properties.

The semi-rigid headgear 380 is generally formed of a semi-rigid material. Where used herein, the semi-rigid materials may include molded plastic or sheet materials that include but are not limited to homogeneous plastic materials and bonded non-woven fiber materials. The upper and lower arms 284, 286 also include such semi-rigid materials, as the arms 284, 286 are formed integrally with and are portions of the semi-rigid headgear 380. Preferably, the right and left lower arms 286 are formed as an integrated component that, in use, will extend around the back of the head and above the neck of the patient.

A soft edging 384 covers or attaches to at least a portion of the periphery of the semi-rigid strap 382. In one configuration, the soft edging 384 does not cover the front or rear faces of the semi-rigid strap 382. For example, the thicknesses of the soft edging

2012331716 07 Jun 2017

384 and semi-rigid strap 382 can be the same at the location where they are joined together.

The soft edging 384 provides a soft, comfortable interface between the periphery of the semi-rigid strap 382 and the user's skin. The soft edging 384 can be made from a variety of soft materials, including but not limited to a plastic, an elastomer, silicone or thermoplastic polyurethane (TPU) plastic. The soft edging 384 can have a Shore hardness in the range of 10-80 Shore A.

As used herein with respect to headgear and straps, "soft" is used to describe a hand of the material, which means the quality of the material assessed by the reaction obtained from the sense touch. In addition, as used herein with respect to headgear and straps, "conformable" is used to describe the ability of the material to conform to the anatomical features of the patient (e.g., around a facial feature). In particular, a strap including at least an element of "soft" and/or "conformable" material also may be "semi-rigid" and/or axially inelastic.

The soft edging 384 can have a uniform thickness, or in some configurations, an uneven thickness. For example, in some configurations the soft edging 384 is the same thickness as the semi-rigid strap 382. In other configurations, the soft edging 384 is thinner than the semi-rigid strap 382, forms a bulbous end to the semi-rigid strap 382, or is simply thicker than the semi-rigid strap 382. A variety of cross-sectional views of the semi-rigid headgear 380 are shown in Figure 29. Each cross-sectional view (A-A' through F-F') shows one possible configuration of semi-rigid strap 382 and soft edging 384 thicknesses, which may be combined as desired. For example, any one particular soft edging 384 thickness and shape could apply to a portion or the entire semi-rigid strap 382, or may be combined with any other particular covering thickness and shape shown in Figure 29.

Many other thickness configurations may be provided, as well. In addition, material thickness may be symmetrically or asymmetrically applied to the semi-rigid strap 382. For example, cross-sectional views C-C' and F-F' are shown as asymmetric; however, in other configurations the thickness of either end the soft edging 384 is symmetrically applied to the semi-rigid strap 382.In some configurations the semi-rigid strap 382 is selectively thickened to provide extra rigidity and support. For example, the second of the two configurations illustrated as cross-sectional view F-F' has such a thickening. Finally, in some configurations, venting through-holes 396 are provided throughout the semi-rigid headgear 380 (such as on the semi-rigid strap 382, as shown in Figure 29, or on soft edging 384) to provide ventilation and sweat management.

When laid flat, as shown in Figure 29, the semi-rigid headgear 380 defines three C-shaped, arcuate regions 386, 388, 390. Two ear-surrounding regions 386, 388 are defined by upper and lower arms 284, 286, and a rear region 390 is defined by lower

2012331716 07 Jun 2017

arms 286 and the back strap portion 280. The semi-rigid headgear 380 is flexible enough to bend to adapt to the shape of the user's head, such that the ear-surrounding regions 386, 388 at least partially surround or encircle the user's ears, and the rear region 390 at least partially surrounds or encircles the back of the user's head, above the neck.

The curvature of each arm 280, 284, 286 can be selected to provide a comfortable fit and to facilitate application and removal of the semi-rigid headgear 380 from the user's head. For example, in the illustrated configuration, the upper arms 284 have a concave curvature and the lower arms 286 have a convex curvature with respect to the opening in the upper ear surrounding arcuate regions 386, 388. The back strap portion 280 and the lower arms 286 all have a concave curvature with respect to opening in the neck surrounding arcuate region 390. These curvatures facilitate application and removal of the semi-rigid headgear 380 from the user's head by, for example, providing openings to the arcuate regions sized and oriented to easily fit over a user's neck and ears.

The configuration of Figure 29 utilizes integrated crown straps comprising first and second crown arms 392, 394 to secure the semi-rigid headgear 380 to the user's head. Once the semi-rigid headgear 380 is positioned to partially surround the user's head, the first and second crown arms 392, 394 are brought into contact with one another to secure the semi-rigid headgear380 in place. Any of a variety of mechanisms can be provided with the first and second crown arms 392, 394 to enable them to attach to one another. For example, in some configurations, a hook-and-loop fabric (e.g., Velcro), or one or more snaps or clips can be used to attach the first and second crown arms 392, 394 to one another.

The crown straps extend laterally over the top of the skull in line with the ears. When the crown straps extend in this manner and the arcuate regions 386, 388 are positioned to partially encircle the user's ears, the back strap 280 of the semi-rigid headgear 380 should locate on or below the inion. The user's inion is the most prominent projection of the occiptal bone at the posterioinferior portion of the skull. In other words, the inion is the highest point of the external occipital protruberance. The semi-rigid headgear 380 can be positioned on the user's head according to any of the configurations described in the applications set forth in the Cross-Reference to Related Applications, each of which forms an integral part of the present disclosure and is hereby incorporated by reference in its entirety.

For example, the back strap portion 280 is adapted to engage with the rear of head of the user. Preferably, the back strap portion 280 is adapted to engage with the head at a location on or below the external occipital protuberance. The back strap portion 280 spans the distance around the back of the head and extends to each side of

2012331716 07 Jun 2017

the head. In some configurations, the back strap portion 280 comprises a longitudinal center that is adapted to be located about 25 degrees below a horizontal plane that extends through the ear canal of the patient.

On either side of the head, the semi-rigid headgear 380 extends upward and downward into left and right side regions that form arcuate regions 386, 388. The side regions are adapted to extend behind the ears of the patient. Preferably, the side regions also are adapted to extend behind the mastoid processes of the patient. Each of the left and right side regions of the semi-rigid headgear 380 extends into or comprises an arched portion 386, 388. The arched portions 386, 388 bend forward. The arched portions 386, 388 are adapted to extend around the respective ears of the patient. Preferably, each of the arched portions 386, 388 terminates at a respective termination portion. The termination portions preferably are adapted to be located forward of the ears of the patient. In some configurations, the side regions and the arched portions 386, 388 of the semi-rigid headgear 380 do not include a soft inner padding portion but may comprise a self-supporting, resilient material that is in direct contact with the head/hair of the patient.

The top portion of the semi-rigid headgear 380 connects the arched portions 386, 388 together. The top portion can be positioned forward of the ears in some configurations. Preferably, the top portion is positioned generally vertical from the ears. More preferably, a longitudinal center of the top portion is adapted to be spaced more than 13 mm, preferably between 13-100 mm, rearward of a vertical plane that intersects the ear canals. In some configurations, the top portion comprises a first segment 392 and a second segment 394 with the first segment 392 and the second segment 394 combining to form the top portion. The first segment 394 extends upward from an apex of the left arched portion 386 while the second segment 392 extends upward from an apex of the right arched portion 388. Preferably, the top portion is formed of a self-supporting and semi-rigid material. In some configurations, the top portion does not include any backing, including a soft padded backing layer.

Each of the upper and lower arms 284, 286 comprises a slot 292, 290 near each arm end. Each slot is configured to receive straps 260 from the mask assembly 102, as shown in Figure 2. In addition, the portion 398 of the semi-rigid headgear 380 covered by straps 260 is thinner than the corresponding arm 284, 286 in order to accommodate the thickness of the strap 260. For example, as shown in Figures 30 and 31, the semi-rigid headgear portion 398 is thinner than the arm 286. The portion 398 is dimensioned such that when the strap 260 is inserted into the slot 290 and tensioned, its thickness will not extend beyond the arm 286. By maintaining the strap 260 and portion 398 thickness less than the arm 286 thickness, the strap 260 does not irritate the user when worn.

2012331716 07 Jun 2017

In addition, the upper arms 284 are configured to extend downward from a location above the user's ear such that the adjustable top straps 260 extend no closer than about 10 mm to the user's eye when worn. The lower arm 286 is configured to be located off of the user's neck when the head is tilted up and down, and the termination point of the lower arm 286 is located generally below the user's ears so that the lower strap as attached to the lower arm 286 angles upwards from the termination point 290 to the mask assembly 120. In such a configuration, as illustrated in Figures 52 and 53, the lower straps and the upper straps form a triangle, and the space between the lower straps and the upper straps on the mask is smaller than the space between the lower straps and the upper straps on the headgear, thereby stabilizing the mask assembly 120 against upward and downward movements.

With reference again to Figure 17, the elbow 222 connects to a conduit 300 through a disconnectable swivel assembly 302. As shown in the section view of Figure 20, the elbow 222 comprises a stem 304 that comprises an inner wall 306 at the base. The inner wall 306 comprises a recess 308.

A sleeve 310 comprises a flange 312 that is received within the recess 308. The sleeve 310 can be secured into position within the elbow 222 using any suitable technique. The sleeve 310 comprises a generally cylindrical outer wall 314. The flange 312 comprises a section that extends outward to connect to a lever 316. Preferably, the flange 312 and the lever 316 are integrally formed. With reference to Figure 21, the lever 316 includes a lower inwardly extending catch 320 and is capable of pivoting about the section that connects the lever 316 to the flange 312. Thus, pressing inward on an upper portion 322 of the lever 316 results in the catch 320 moving away from the generally cylindrical outer wall 314 of the sleeve 310.

A swivel 330 comprises a generally cylindrical inner wall 332. The inner wall 332 slides over the outer wall 314 of the sleeve 310 such that a sliding fit results between the swivel 330 and the sleeve 310. An upper portion 334 comprises a shoulder 336. The catch 320 of the lever 316 can secure the swivel 330 in axial position on the sleeve 310 by engaging with the shoulder 336. When the upper portion 322 of the lever 316 is depressed, the catch 320 moves away from the shoulder 336, which allows the swivel 330 to be removed from the sleeve 310.

A flap 350 can be mounted between the stem 304 and the sleeve 310. In the illustrated configuration, the flap 350 extends into a flow channel 352 from a base 354 that is sandwiched between the stem 304 and the sleeve 310. The flap 350 can pivot upward (as shown in Figure 20, see arrow P) about an axis X (see Figure 21) away from the sleeve 310 such that flow from a positive pressure generator can continue generally unobstructed to the user through the interface 100. The flap 350 pivots downward into contact with the sleeve 310 to seal the flow channel 352 in the event that the positive

2012331716 07 Jun 2017

pressure source stops providing a pressurized flow of air. In some configurations, the flap 350 will not fully contact the sleeve 310. In some configurations, the flap 350 will not seal the channel 352 when in the down position.

With reference to Figure 21, a port 360 is defined through the elbow 222 at a location above the flap 350. The port 360 preferably is positioned along a portion of the elbow 222 that is in the vicinity of the axis X. In some configurations, the port 360 is positioned to be substantially shielded by the flap 350 from an inspiratory flow of air. In other words, as the air pivots the flap 350 away from the sleeve 310, the flap 350 is moved into a position that at least partially or completely covers the port 360.

In some configurations, the port 360 extends through a wall of the elbow 222 that comprises a generally planar inner wall 362. The generally planar inner wall 362 helps the flap 350 to generally seal the port 360 when the flap is moved upward away from the flange 312 of the sleeve 310.

In some configurations, the lever 316 overlies a majority of the port 360 such that the port 360 is generally obscured from view. As shown in Figure 20, however, a gap 364 preferably surrounds at least a portion of the lever 316 such that a relatively free flow of air can pass through the port 360 when the flap 350 does not overly the port 360. In addition, in some configurations, the port 360 and the lever 316 are positioned on a same side of the elbow 222 as an opening 370 defined within the ball end 220, which opening is positioned within the mask assembly 102 when the connection port assembly 104 is assembled to the mask assembly 102. Advantageously, such a positioning places the port 360 in a position on the elbow 222 that faces the user. Such a location further obscures the port 360 from view during use, which results in a more aesthetically pleasing configuration. Moreover, because flow through the port 360 will be very infrequent, having the port 360 disposed toward the user will not cause any significant discomfort for the user.

While not shown, the elbow 222 also can comprise one or more bias flow vent holes. The bias flow vent holes preferably are positioned in a forwardly directed orientation such that any bias flow does not directly impinge upon the user.

Another configuration of an elbow assembly 302 is illustrated in Figures 48-51. The elbow assembly 302 comprises an elbow 222, a sleeve, 310, and/or a swivel 330, as shown in Figure 49. In some configurations, the elbow assembly 302 only includes the elbow 222 and sleeve and omits the swivel 330. The swivel may be permanently or removably attached to the sleeve 310 and elbow 222; in some configuration, the swivel 330 is integrally formed with the end of the delivery conduit. A flap 350 is positioned over the sleeve 310 such that it at least partially obstructs the sleeve's flow channel 352. The elbow assembly 302 functions similarly to the elbow assembly 302 of Figures 17-21; however, the elbow assembly 302 of Figures 48-51 provides the additional benefit of

2012331716 07 Jun 2017

directing gases away from the patient when the flap 350 drops to its closed position (as shown in Figures 50 and 51).

With reference to Figure 49, the sleeve 310 preferably comprises two or more cut out regions or recesses 356. The recesses 356 can have any suitable shape and, in the illustrated configuration, the recesses 356 comprise a semicircular configuration that extends upward into the sleeve 310. The sleeve 310 also comprises at least one bump 357, and preferably two or more bumps 357. Preferably, each of the bumps 357 extends around an arc of about 70 degrees. More preferably, each of the bumps 357 is generally centered between two recesses 356 and each of the bumps 357 extends about 70 degrees around an outer surface of the sleeve 310.

The swivel 330 preferably is generally cylindrical in configuration. As shown in Figure 49, the swivel 330 has an inwardly extending ridge 358. The ridge 358 preferably encircles the entire inner surface. In some configurations, the ridge 358 can be interrupted. Preferably, however, the ridge 358 does not have any interruptions large enough to accommodate the entire bump 357 such that the ridge 358 and the bump 357 can cooperate to keep the swivel 330 mounted over the sleeve 310. When assembling the swivel 330 to the sleeve 310, the recesses 216 allow the bumps 220 to deflect inward such that the bumps 357 can slide over the ridge 358 and then snap back outward to secure the bumps 357 under the ridge 358.

The elbow 222 comprises openings 420 at its sides that are in fluid communication with an air venting channel 422. The air venting channel 422 is formed by the spacing between the elbow's inner and outer walls 362, 424, as shown in Figures 50 and 51.

When the flap 350 drops to its closed position, as shown in Figures 50 and 51, air exhaled from the user enters opening 370 of the elbow 222. The exhalation flows through the port 360 in the elbow's inner wall 362, and through the venting channel 422 until it exits the elbow 222 via the opening 420.

The configuration of Figures 48-51 provides a reduced overall length and improves product aesthetic by eliminating an unsightly hole positioned at the front of the elbow 222. In addition, the configuration of Figures 48-51 and improves patient comfort by preventing air from being directed towards the user. Instead, openings 420 direct air flow out of the sides of the elbow 222 and away from the patient.

Figure 54 illustrates a further mask configuration 500. The mask configuration 500 illustrated in Figure 54 has been shown without any accompanying headgear assembly for clarity. Any suitable headgear assembly can be used with the mask configuration 500. For example but without limitation, any headgear assembly disclosed within this specification can be used with the mask configuration 500.

2012331716 07 Jun 2017

With continued reference to Figure 54, the illustrated mask configuration 500 generally comprises a mask base 502 and a mask seal 504. The mask base 502 preferably is more rigid that the mask seal 504. For example, in one configuration, the mask base 502 is formed of a polycarbonate material while the mask seal 504 is formed of a silicone material. Other suitable materials also can be used for each of the mask base 502 and the mask seal 504.

The mask seal 504 can be secured to the mask base 502 in any suitable manner, including but not limited to any of those disclosed within this specification. For example but without limitation, with reference to Figure 55, a flange 506 of the mask seal 504 can be inserted into a groove 510 provided along a periphery of the mask base 502. In some configurations, at least a portion of the mask seal 504 can underlie at least a portion of the mask base 502. In some configurations, a more rigid member, such as a clip for example but without limitation, or a more rigid portion can be integrally formed with the mask seal 504 and the more rigid member or portion can be used to connect the mask seal 504 with the mask base 502.

As shown in Figure 54, the mask seal 504 preferably comprises a first paddle or wing 512 and a second paddle or wing 514. Preferably, the first paddle 512 and the second paddle 514 are hollow. As shown in Figure 62, for example but without limitation, a pocket 518 can be defined within each of the first paddle 512 and the second paddle 514. The pockets 518 are in fluid communication with a chamber 520 defined by the mask seal 504. Accordingly, pressure within the chamber 520 defined by the mask seal 504 can be used to inflate the pockets 518 of the first and second paddles 512, 514.

With reference to Figure 55, which is a section through the mask assembly 500 taken along the line 55-55 in Figure 54, the mask seal 504 also preferably comprises an upper surface 516. The paddles 512, 514 extend generally upward from the upper surface 516. Preferably, the pockets 518 defined within the paddles 512, 514 extend above the upper surface 516. More preferably, the pockets 518 are defined on lateral portions such that the pockets 518 extend upward along the lateral sides of the nose. By extending the pockets 518 above the upper surface 516 and along the lateral sides of the nose, a ballooning effect can be used to greatly improve an inwardly-directed ballooning effect to provide an enhanced seal against an outer surface of the nose. Together, the upper surface 516 and the paddles 512, 514 enable an improved seal with a nose to reduce or eliminate the occurrence of pressure-related skin problems. More particularly, because the illustrated configuration does not traverse from left to right the nose in a nasal bridge region, the illustrated mask configuration 500 eliminates the occurrence of pressure-related skin problems along the bridge of the nose.

With reference again to Figure 54, the first and second paddles 512, 514 together with the upper surface 516 define a valley 522. The valley 522 preferably defines a

2012331716 07 Jun 2017

forwardly disposed opening. In other words, the illustrated valley 522 defines a passage that extends from front to rear of the illustrated mask seal 504. Moreover, the valley 522 preferably accommodates a full size range of users because the nose is received in a region that is generally open from front to rear such that at least a tip of the nose can protrude through the forward opening defined by the valley 522.

As illustrated in Figure 54 and Figure 55, the valley 522 preferably accommodates at least a tip of a nose of the user such that the upper surface 516 underlies the nose. Preferably, when viewed from the front, a gap G of between about 5 mm and about 30 mm is defined between the paddles 512, 514. More preferably, the gap G between the paddles 512, 514 is between about 10 mm and about 25 mm. In one configuration, the gap G is about 15 mm. The upper surface 516, by underlying the nose, defines a primary seal between the mask configuration 500 and the face of the user.

The paddles 512, 514 preferably extend upward to some extent along the lateral sides of the nose. In some configurations, the paddles 512, 514 extend upward to a greater extent than does the sealing upper surface 516. The paddles 512, 514 can be shorter than illustrated or can be longer than illustrated. By extending upward above the upper surface 516 and by extending upward alongside the nose, the paddles 512, 514 create a secondary seal with the face of the user. Preferably, the paddles 512, 514 are adapted to extend upward to at least the fibro-fatty tissue FFT of the alar of the nose, which is represented in Figure 70 by line A. More preferably, the paddles 512, 514 are adapted to extend upward beyond the fibro-fatty tissue FFT into the region of the minor alar cartilage MAC, which is represented in Figure 70 by line B. Even more preferably, the paddles 512, 514 are adapted to extend upward beyond the minor alar cartilage MAC into the region of the lateral processes of the septal nasal cartilage SNC, which is represented in Figure 70 by line C. In some configurations, the paddles 512, 514 extend upward with at least a portion of the paddles 512, 514 extending upward beyond the nasal bone NB (i.e., the bridge) of the nose of the user, which is represented in Figure 70 by line D. In some configurations, the paddles 512, 514 are adapted to extend along lateral portions of the lateral margins of the nose.

The paddles 512, 514 preferably are configured to extend along a surface of the face generally adjacent to the nose. As shown in Figure 55, when viewed from the side, the paddles 512, 514, in some configurations, are generally triangular, or fin-shaped. Such a configuration provides a large surface area for sealing the paddles 512, 514 against the side of the nose while also having a reduced side profile to reduce the likelihood of the paddles 512, 514 being forced away from the nose by contact during sleeping, such as when rolling from side to side. While the illustrated configuration comprises two distinct paddles 512, 514, the paddles 512, 514 can be connected together to generally enclose at least a portion of the nose.

2012331716 07 Jun 2017

As shown in Figures 55 and 57, the upper surface 516 extends rearward (i.e., toward the face of the user or away from the mask base 502) to a lip 524. The upper surface 516, in the vicinity of the lip 524, underlies the nose and preferably seals against the nose while the lip 524 can seal against the upper lip region of the face just above the vermilion border.

As described above, the upper surface 516 of the mask seal 504 extends rearward to connect with or to define the lip 524. With reference to Figure 57, the lip 524 preferably encircles an opening 526 into the chamber 520 defined within the mask seal 504 and connects with or defines a portion of a sidewall 528 of the mask seal 504.

As shown in Figure 57, the upper surface 516 comprises at least a portion of one or more nasal opening 530. The nasal opening 530 can be positioned laterally between the paddles 512, 514 and can be defined through the upper surface 516 to provide communication with the chamber 520 of the mask seal. The nasal opening 530 preferably opens in a substantially upward direction while the oral opening 526 preferably opens in a substantially rearward direction. In the illustrated configuration, the mask seal 504 comprises the oral opening 526 and the separate nasal opening 530. While other configurations having combined nasal and oral openings (e.g., as shown in Figure 59), the separate openings 526, 530 as shown in Figure 58 can be helpful and instructive to users in learning how to properly wear the illustrated mask configuration 500.

The upper surface 516 preferably is substantially flat and generally does not protrude upward into the nasal cavities. Preferably, the nasal opening 530 does not extend up into the nasal vestibule, which is the most anterior part of the nasal cavity of the user. More preferably, the nasal opening 530 extends under, but not up into, the nasal vestibule. The nasal opening 530 preferably is generally flush with the upper surface rather than extending upward into some other superstructure. In some configurations, the upper surface 516 could comprise one or more nasal prong, one or more nasal pillow or the like. In the illustrated configuration, the upper surface 516 is supported by the paddles 512, 514 and defines a somewhat arched link to the top ends of the paddles 512, 514. The arched link supports the upper surface 516 by suspending it from a higher pivot point, which allows the nasal sealing surface defined along the upper surface 516, along with the surrounding geometry, to stretch, move and/or contort to noses having differing widths, depths and other geometrical features.

As illustrated in Figure 57, the lip 524 can define a band 532 that is disposed between the oral opening 526 and the nasal opening 530. As shown by comparing the embodiment shown in Figure 58 with the embodiment shown in Figure 59, it is possible to omit the band 532 and a portion of the upper surface 516 that extends between the band 532 and the nasal opening 530 such that the oral opening 524 and the nasal opening 530 merge into a combined oral nasal opening 534.

2012331716 07 Jun 2017

As shown in Figure 60, in some configurations featuring the combined oral-nasal opening 534, the two sides of the lip 524 can be interconnected with a clip 536. The illustrated clip 536 generally comprises a shape like an omega (Ω). As illustrated in Figure 60, the clip 536 can comprise a first foot 540 and a second foot 542 that are interconnected by a body 544 of the clip 536. The body 544 can have any suitable shape and configuration. For example but without limitation, while the illustrated body 544 comprises a U-shape or C-shape, the body 544 could be V-shaped or the like. In some configurations, the clip can be formed of Silicone or any other suitable material.

With reference again to Figure 57, the sidewall 528 can extend vertically higher than the upper surface 516. Preferably, the sidewall 528 connects to the lip 524, generally encircles the oral opening 526 and extends up to the sides of the nose of the user in the region of the first and second paddles 512, 514. The sidewall 528, because it extends upward beyond the band 532 in the illustrated configuration, provides a taller platform when the mask configuration 500 is viewed from the side (e.g., Figure 61), which enhances the balancing of the mask seal 504 and which reduces rolling movement of the mask configuration 500 about a generally horizontal axis.

The band 532, as shown in Figure 57, extends between the oral opening 526 and the nasal opening 530. Thus, the illustrated band 532 connects the sidewall 528 at a location between the two openings 526, 530. In some configurations, the clip 536 connects the sidewall 528 at a location between the two portions that define the combined oral-nasal opening 534. In other configurations, any suitable connecting structure can be used that generally connects the sidewall 528 from opposing sides of the openings 526, 530 or opening 534. The location of the connecting structure can be between an upper extreme and a lower extreme of the openings 524, 530 or the opening 534. In other words, in some configurations, a first lateral side of the sidewall 528 is connected to a second lateral side of the sidewall 528 in a region that bridges the combined opening 534.

By connecting the lateral portions of the sidewall 528, the lateral portions of the sidewall 528 effectively are tethered together. Tethering together the lateral portions of the sidewall 528 improves the stability of the mask seal 504 during sleeping, for example, when the user may roll from one sleeping position to another (e.g., from back to side), which can cause lateral movement of the mask configuration 500 due to the mask being pulled by the CPAP tube or due to contact with the pillow. Moreover, due to the flexibility of the tether (e.g., the band 532 or the clip 536), a wider range of facial profiles can be accommodated. For example, flatter face profiles can be accommodated while still allowing the seal to self-adjust to the more protruded face profiled prevalent in European populations.

2012331716 07 Jun 2017

The tethering provided by the band 532 or the clip 536, for example, also can help with rolling of the sidewall 528. With reference to Figure 57, because the band 532 extends laterally and connects to the sidewall 528, forward depression of the band 532 will cause inward rolling of the sidewall 528, which enhances the conformability of the mask seal 504 to a variety of facial geometries. In addition, as the upper surface 516 is depressed downwards, the first and second paddles 512, 514 pivot inwards such that the gap G at the top of the paddles 512, 514 decreases relative to the gap G at the base of the paddles 512, 514.

With reference now to Figures 62-65, the illustrated mask seal 504 comprises a variety of rigidities or variety of degrees of flexibility to further enhance the conformability of the mask seal 504, which enhanced conformability helps to reduce leaks when the mask configuration 500 is used in positive pressure applications.

An upper portion of the illustrated mask seal 504 comprise a more rigid support region 550 and ballooning or flexing regions 552. In the illustrated configuration, the support region 550 is more rigid because of thicker cross-sections while the ballooning or flexing regions 552 are less rigid because of thinner cross-sections. Other techniques also can be used to vary the rigidity or flexibility. For example, material choices, material blends or the like can be adjusted to adjust the rigidity or flexibility of different regions of the mask seal 504. By way of further example, some regions can be supported by the mask base 502 or other components to stiffen the region as desired.

The illustrated more rigid support region 550, which is best illustrated in Figure 64, can be located on a forward-facing surface of the first and second paddles 512, 514. The more rigid support region 550 also is a portion that includes the flange 506 of the mask seal 504 that connects to the groove 510 of the mask base 502. The support regions 550 overlie the ballooning or flexing regions 552 in the illustrated configuration. The illustrated configuration is desired to help control the ballooning and flexing of the ballooning or flexing regions 552 such that the ballooning action can be better directed toward the user.

With continued reference to Figures 63-65, in addition to the support regions 550 and the ballooning or flexing regions 552, the illustrated mask seal 504 also comprises lower corner reinforcements 554 and a flexing chin region 556. As with the support regions 550 and the ballooning or flexing regions 552, the corner reinforcements 554 are stiffer than the flexing chin region 556. The stiffer corner reinforcements 554 help control and/or direct ballooning of regions of the mask seal 504 while the more flexible chin region 556 can more easily deform to accommodate users having a wide variety of facial geometries.

As illustrated, the lower corner reinforcements 554 extend downward at or just below the vertical location of the upper surface 516 and the lower corner reinforcements

2012331716 07 Jun 2017

wrap inward toward a generally vertical center plane that generally bisects the mask seal 504. In addition, in the illustrated configuration, the lower corner reinforcements are positioned along the sidewall 528 of the mask seal 504.

The illustrated chin region 556 is positioned between the lower corner reinforcements. Preferably, the chin region 556 also wraps over at least a portion of the sidewall 528. Moreover, the flexible chin region 556 preferably extends upward and around at least a portion of the lip 524 that defines the opening 526 into the chamber 520 of the mask seal 504. In the illustrated configuration, the flexible chin region 556 extends vertically upward to substantially the same extent as the lower corner reinforcements 554. In this manner, the lower corner reinforcements 554 can reinforce the lateral portions of the flexible chin region 556.

Further, in the illustrated configuration, the mask seal 504 comprises a forward-facing stiffener panel 560. The stiffener panel 560 generally encircles a region that will mate with the mask base 502. Because the stiffener panel 560 encircles the mating region, the connection to the mask base 502 can be made more stable.

In some embodiments, the thicknesses are related to each other as follows: the flexing regions 550 < the chin region 556 < lower corner reinforcements 554 < stiffener panel 556 < support region 550. In some embodiments, the flexing region 550 has a thickness of between about 0.3 mm and about 1.25 mm, and preferably about 0.8 mm, the chin region 556 has a thickness of about 0.5 mm, the lower corner reinforcements have a thickness of about 1.25 mm, the stiffener panel 560 has a thickness of about 2.0 mm and the support region 550 has a thickness of about 2.5 mm. Preferably, the thicker portions (e.g., the support regions 550) of the mask seal 504 oppose the portions having the thinner thicknesses (e.g., the flexing regions 552). In some configurations, at least a portion of the thickest portion (e.g., the support region 550) overlies at least a portion of the thinnest portion (e.g., the flexing regions 552). Such configurations enable ballooning in a desired direction (i.e., toward the face of the user). Preferably, a transitional framework 558 connects the various regions 550, 552, 554, 556.

The thinner cross sections of the flexing region 552 and the chin region 556 provide soft and flexible surfaces that are adapted to contact the face of the user. Advantageously, the thinner cross section of the flexing region 552 allows that shape defined by the valley 522 to stretch, move and deform such that a larger portion of the population can use the same mask. Preferably, the stretching, moving and deforming accommodates a large range of nose widths. Similarly, the thinner cross section of the flexing region 552 allows the shape of the chin cup region of the mask seal 504 to stretch, move and deform. In other words, the thinner cross sections of one or more of the flexing region 552 and the chin region 556 enable the mask seal 504 to conform to a very wide variety of facial geometries.

2012331716 07 Jun 2017

As described above and with reference again to Figure 55, the mask base 502 features a groove 510 that preferably is secured to the flange 506 of the mask seal 504. In some configurations, the mask base 502 can overlie at least a portion of the thicker stiffener panel 560 and/or at least a portion of the support regions 550. By overlying those portions of the mask seal 504, the mask base 502 can reinforce those regions.

With reference still to Figure 55, the mask base 502 comprises a central opening 570 that receives a connector 572. The connector 572 and the central opening 570 can have any suitable configuration, including but not limited to any configuration described within this specification. Only a portion of the connector 572 is shown in Figure 54. Other styles of connectors 572 also can be used.

The central opening 570 can be defined by a wall 574 that comprises a contoured inner surface. The contoured surface of the wall 574 can be radiused to receive a ball end 576 of the connector 572, which can comprise a swiveling elbow. The ball end 576 has a contoured surface that can be snap fit into the contoured surface defined by the wall 574. The connection between the two contoured surfaces allows the surfaces to slide relatively freely with each other such that the position of the swiveling connector 572 can be easily changed relative to the mask base 502. In some configurations, the swiveling connector 572 could be configured for rotation or swiveling without having a ball-joint configuration.

The illustrated mask base 502 also comprises one or more strap connections 580 (see Figure 59). The strap connections 580 can have any suitable configuration, including but not limited to any structures that connect to clips or the like described within this specification. For example, the illustrated mask base 502 comprises at least two pockets 582.

The pockets 582 recede into the mask base 502 and protrude rearward from the mask base 502, as shown in Figure 56. The illustrated pockets 582 are formed such that one pocket 582 is formed on each lateral side of the mask base 502. The pockets 582 can be positioned to be symmetrical relative to the central generally vertical plane, which plane substantially bisects the mask base 502. In some configurations, as shown in Figure 56, the pockets 582 have an enlarged vertical dimension relative to a transverse or lateral dimension.

In the illustrated mask base 502, the laterally inward portion of each pocket 582 comprises a support wall 584, which is best shown in Figure 61. The support wall 584 is positioned toward the center plane. Each of the pockets 582 is configured to receive a clip such as the clip 252 that is shown in Figure 22, for example but without limitation. Once the clip 252 is installed within the pocket 582, the support wall 584 helps to limit rotation of the clip 252 relative to the pocket 582. Moreover, the large vertical dimension helps users to locate the pocket 582 with the clip 252 during installation.

2012331716 07 Jun 2017

With continued reference to Figure 61, each of the pockets 582 preferably comprises a tab 586 that can engage with the interlock feature 264 of the associated clip 252. Other manners of interlocking the clip 252 with the pocket 582 also can be used. Moreover, any other suitable manner of securing the mask base 502 or the mask seal 504 to a headgear assembly 600 (see Figures 67-69) can be used.

With reference now to Figure 66, a further mask configuration 500' shows another style of strap connection but otherwise is the same as the mask configuration 500 shown and described with reference to Figures 54-65. The illustrated mask base 502' comprises four strap connections 580'. As shown in Figure 66, in the illustrated configuration, the strap connections 580' have two connections 580' positioned on each lateral side of the mask configuration 500'. The illustrated strap connections 580' comprise loops through which straps 602 from any suitable headgear assembly 600 can be threaded and/or to which the straps 602 can be secured.

With reference to Figures 67-69, in addition to the straps 602, the headgear assembly 600 also comprises a back strap assembly 604 and a top strap 606. While the headgear assembly 600 can be used, any other suitable head gear assemblies also can be used, including but not limited to any construction disclosed herein.

The back strap 604 extends around a back of the head of the user at a location generally above a nape of the neck but generally below the occipital protuberance. Accordingly, the back strap 604 preferably arcs upward to reduce or eliminate the likelihood of the back strap 604 contacting the nape of the neck of the user. At a location rearward of the ear of the user, the back strap 604 forks into an upper arm 610 and a lower arm 612.

The upper arm 610 arcs upward to a location above the ear of the user and then arcs downward to a location generally forward of the ear of the user. The downward arc, when combined with the more rigid material of the upper arm 610, enables the attachment point between the upper arm 610 and the strap 602 to be lowered such that the strap 602 can provide a desired force vector UFV to the mask configuration 500'. If the attachment point is too high, then the headgear assembly 600 would provide too much upwards force to the mask configuration 500', which would weaken the stability of the mask configuration 500'. Moreover, as shown in Figure 68, the lowered attachment point results in the strap 602 being positioned generally lower than the eye of the user, which improves the field of vision for the user and improves comfort for the user.

As shown in Figure 68, the lower arm 612 extends downward and forward to a location slightly rearward of the ear. When combined with the more rigid material of the lower arm 612, the location lower than and slightly rearward of the ear results in the lower arm 612 resting relatively flat alongside the upper neck region of the user, which

2012331716 07 Jun 2017

improves comfort for the user. When connected with the lower arm 612, the strap 602 can provide a desired lower force vector LFV to the mask configuration 500'.

The straps 602 can be connected to the back strap assembly 604 in any suitable manner. In the illustrated configuration, the straps 602 connect to the upper arm 610 and the lower arm 612 respectively. Preferably, the upper arm 610 and the lower arm 612 are more rigid than the straps 604 such that the arms 610, 612 generally maintain shape as the headgear assembly 600 is being donned. In some configurations, each of the upper arm 610 and the lower arm 612 supports its own weight. In some configurations, each of the upper arm 610 and the lower arm 612 is structured to be tangle-free during donning. For example, the arms 610, 612 have sufficient torsion stiffness to reduce the likelihood of twisting when being put on.

Preferably, the straps 602 connect to at least one of the upper arm 610 and the lower arm 612 at a location forward of the ear. Such a configuration helps the user to locate the straps 602 without much difficulty. In addition, the ends of the upper arms 610 and the lower arms 612 can comprise respective slots 614, 616 such that the straps 602 can be threaded through the slots 614, 616. In addition, the straps 602 can comprise an adjustment mechanism 620, such as a Velcro or buckle configuration. The adjustment mechanism 620 allows a force between the mask seal 504 and the face of the user to be adjusted. Any suitable adjustment mechanism 620 can be used.

With reference to Figure 68, the top strap 606 can extend upward and over the top of the head of the user. Preferably, the top strap 606 is flexible and has an adjustable length. The top strap 606 can connect to the upper arms 610 through a slot 622 and reduces the likelihood of the upper arms 610 sliding down the head of the user and contacting the ears of the user. Preferably, the top strap 606 connects to the upper arms 610 at a location generally above the ears of the user.

With reference to Figure 68, an angle α defined between the upper force vector UFV and the lower force vector LFV can be within the range of about 25 degrees and about 70 degrees. Preferably, the angle α can be within the range of about 30 degrees and about 60 degrees. More preferably, the angle α can be within the range of about 35 degrees and about 50 degrees. In some embodiments, the angle α can be about 40 degrees.

Advantageously, relatively small adjustments to the tension of the strap 602 that is connected to the upper arm 610 of the headgear assembly 600 (i.e., adjustment to the tension along the upper force vector UFV), when used with the mask configurations 500, 500' that include the paddles 512, 514 can greatly reduce or eliminate leakage into the eye region of the user. In other words, with the paddles 512, 514 and the upper surface 516, as the upper strap 602 is tightened, the mask configuration 500' is pulled upwards against the bottom of the nose of the user, which depresses the upper surface 516 of the

2012331716 07 Jun 2017

mask seal 504, which in turn causes the paddles 512, 514 to pivot inwards toward the nose of the user. Thus, the upwardly directed force can help to increase the force provided by the paddles 512, 514 against the face of the user in the vicinity of the eyes. Early testing has indicated that about 75% of the force required to achieve a desired sealing level is provided by the lower straps 602 with the upper straps 602 being adjustable to minimize or eliminate leakage into the region of the eyes.

With reference now to Figures 71 and 72, a further mask assembly 700 is illustrated in position on a face of a user. The illustrated mask assembly 700 is a combined oral and nasal mask. The illustrated mask assembly 700 is designed to seal under the nose of the user, along a portion of the face extending lateral to the nose, as well as around the mouth of the user.

The mask assembly 700 advantageously does not require contact with the bridge NB of the nose of the user. In the illustrated configuration, the mask assembly 700 does not extend over the bridge NB of the nose of the user. More particularly, the illustrated mask assembly 700 does not contact the bridge of the nose of the user. Even more particularly, the illustrated assembly 700 does not contact a forward facing portion of the bridge of the nose of the user. In some configurations, the assembly 700 does not contact the face in a region vertically higher than a generally horizontal plane LE extending along the lower edges of the eyes of the user.

In the illustrated configuration, the mask assembly 700 does not extend over the tip NT of the nose of the user. In some configurations, the illustrated mask assembly 700 preferably does not enshroud the tip NT of the nose of the user. In some configurations, the tip NT of the nose of the user extends over the adjoining portion of the mask assembly 700. In some configurations, the mask assembly 700 covers the tip of the nose. In some configurations, the seal of the mask assembly covers the tip of the nose.

As illustrated, the mask assembly 700 preferably is adapted to extend around and seal over the wing NW or alar of the nose, which flares out to form a rounded eminence around the nostril. The illustrated mask assembly 700 is adapted to seal around the surfaces that define the opening to the nostril, including the fleshy external end of the nasal septum, sometimes called the columella. In some configurations, the mask assembly 700 is adapted to extend upwardly to seal along at least a portion of the left and right dorsal side walls NDS of the nose of the user. In some configurations, the mask assembly 700 is adapted to extend upwardly along at least a portion of the left and right dorsal side walls NDS without extending upwardly to the region of the bridge NB of the nose of the user.

As illustrated, the mask assembly 700 comprises a mask base 702, a mask seal 704 attached to the mask base 702 and a connector 706 also attached to the mask base

2012331716 07 Jun 2017

702. The connector 706 can be connected to the base 702 in any suitable manner, including but not limited to any manner discussed elsewhere within this application. For example, but without limitation, the connector 706 can be connected to the base 702 such that the connector 706 can swivel, pivot and rotate relative to the base 702. In some configurations, the connector 706 can define a portion of a ball joint with the mask base 702, for example but without limitation, defining the other portion. The ball joint can have any suitable configuration and can be configured in accordance with the descriptions of ball and socket arrangements discussed elsewhere within this application. The connector 706 facilitates connection to a supply conduit or the like for the supply of pressurized breathing gases. Any suitable connector 706 can be used.

In the illustrated configuration, the connector 706 comprises an elbow, such as a polycarbonate elbow for example but without limitation, that contains bias flow holes 710. The bias flow holes 710 are a collection of orifices that are configured to circulate air and to reduce the likelihood of rebreathing expired carbon dioxide by the user. While the bias flow holes 710 are shown exclusively on the connector 706, in some configurations, the bias flow holes 710 can be provided on the mask base 702, on the mask seal 704 or on any combination of the connector 706, the base 702 and the seal 704. The bias flow holes 710 can have any suitable cross-section and can be cylindrical, hour-glass shaped, tapered in either direction, fully or partially tapered, fully or partially cylindrical, contoured to vary in cross-section or the like.

With reference to Figure 73, the mask base 702 will be described in greater detail. The mask base 702 provides a support structure of sorts for the mask assembly 700 in general and for the mask seal 704 more specifically. The mask base 702 can be formed from any suitable material. In some configurations, the mask base 702 is formed from a fairly rigid material. In some configurations, the mask base 702 is formed from a plastic material, such as a polycarbonate material. In some configurations, as with the configuration of Figure 13 above, the mask assembly 700 can comprises a mask seal that includes a mask seal clip that is separate from but attachable to a mask base. In such a configuration, the mask seal clip would connect the mask seal 704 to the mask base 702. In such configurations, the mask seal and mask seal clip can be formed separately and secured together or the mask seal and the mask seal clip can be integrated into a single component. In some configurations, the mask seal can be overmolded onto the mask seal clip and, in some configurations, the mask seal can be overmolded directly onto the mask base.

With reference to Figures 73 and 74, in the illustrated configuration, the mask base 702 sweeps rearward from a central portion 712 with a pair of wings 714. As illustrated, the wings 714 can extend rearward and upward relative to the central portion 712 of the mask base 702. Accordingly, the illustrated wings 714 include upwardly

2012331716 07 Jun 2017

projecting portions 716. The mask base 702 generally, and the upwardly projecting portions 716 of the wings 714 as an example, can provide reinforcement to the lateral portions of the mask seal 704.

The central portion 712 can have a vertical expanse that is lower than the height of the upwardly projecting portions 716 of the wings 714. Thus, with reference to Figure 73, when viewed from the front, the mask base 702 comprises an edge having a generally M-shaped appearance. In addition, when viewed from the front, an upper edge of a central area of the mask base 702 comprises a generally U-shaped appearance. By incorporating the recessed central portion 712 between the pair of wings 714, the mask base 702 can provide desired support to the mask seal 704 while providing adequate clearance for the nose of the user.

The mask base 702 and the mask seal 704 can be connected in any suitable manner. In the configuration illustrated in Figure 75, the mask base 702 comprises a generally circumscribing flange 720 and the mask seal 704 can be overmolded onto the flange 720 of the mask base 702. Any other suitable technique can be used to form the junction between the mask seal 704 and the mask base 702.

In some configurations, the mask seal 704 can be formed to allow removal from the mask base 702. For example, the mask seal 704 can include a groove and the mask base 702 can include a flange, or any other cooperating structures, such that the mask seal 704 can be removably connected to the mask base 702.

As shown in Figure 75, the illustrated mask seal 704 comprises a thickened region 721, which is thicker in cross-section, adjacent the juncture with the mask base 702. Such a configuration improves service life of the mask seal 704 as well as improves the integrity of the connection between the mask seal 704 and the mask base 702. In some configurations, the thickest region of the mask seal 704 is the thickened region 721.

The mask seal 704 is designed to seal against the face of the user. The mask seal 704 preferably is formed of a soft material, such as silicone, for example but without limitation. In some configurations, at least portions of the mask seal 704 can be textured to improve comfort to the user. For example, in some configurations, at least portions of the mold used to form the illustrated mask seal 704 can be bead blasted to provide a surface texture in at least the regions of the mask seal 704 that will contact the skin of the user. Other techniques for texturing one or more surface of the mask seal 704 can be used.

As shown in Figure 76, the illustrated mask seal 704 comprises an oral-nasal mask seal and, therefore, comprises at least one oral opening 722 and at least one nasal opening 724. In some configurations, the mask seal 704 can comprise a combined oral-nasal opening. In some configurations, the mask seal 704 can comprise more than one

2012331716 07 Jun 2017

nasal opening 724. In some configurations, the mask seal 704 can comprise nasal openings 724 defined within superstructures, such as pillows, prongs or the like.

The at least one oral opening 722 and the at least one nasal opening 724 preferably communicate with a single chamber 725 that is defined within the mask assembly 700. The chamber 725 of the illustrated mask assembly 700 is at least partially defined by the mask base 702 and the mask seal 704. The at least one oral opening 722 is substantially opposed to the opening 728 that receives the connector 706. The at least one nasal opening 724 can be vertically above the at least one oral opening 722. The at least one nasal opening 724 can be positioned between the opening 728 for the connector 706 and the at least one oral opening 722. The at least one oral opening can have an axis OA that is inclined relative to vertical and that generally extends through the opening 728 for the connector 706.

With reference again to Figure 73, the mask seal 704 preferably comprises a pair of paddles 726 that extend upward above an upper surface 730. The paddles 726 are configured to extend upward alongside, and in some configurations above, the nares. In some configurations, the paddles 726 each comprise an air pocket that is in direct fluid communication with the air path through the mask assembly from the connector to the at least one nasal opening and the at least one oral opening. Preferably, as shown in Figure 76, the upper surface 730 is hammocked between inner portions 733 of the paddles 726. In such a configuration, downward pressure applied to the upper surface 730 can cause the paddles 726 to pivot inwardly at the top. Accordingly, increasing force between the nose of the user and the upper surface 730 can result in increasing sealing force being applied between the sides of the nose of the user and the paddles 726. The degree to which the pivoting action results in increasing force can be varied by construction. In other words, longer paddles 726 display increased degrees of pivoting compared to shorter paddles 726. On the other hand, shorter paddles 726 are capable of accommodating greater variations in nasal geometries compared to longer paddles 726 and result in the mask assembly 700 being easier to put onto the face.

With reference to Figure 75, four different planes HP1, HP2, HP3, HP4 are illustrated. The planes HP1, HP2, HP3, HP4 are shown extending generally parallel to each other and extending generally normal to a plane RP defined along a rearmost region 734 of the mask seal 704 (e.g., the rearmost region 734 could correspond to a plane such as a table top that would support the mask seal 704 if the mask seal 704 were resting on a table). In some configurations, an angle β is defined between at least one of the four planes HP1, HP2, HP3, HP4 and the rear plane RP that is between about 80 degrees and 100 degrees. In some configurations, the angle β is between about 85 degrees and about 95 degrees. In the illustrated configuration, the angle β is about 90 degrees.

2012331716 07 Jun 2017

As illustrated, the first plane HP1 extends through a forwardmost region or lowermost region of the upper portion of the mask base 702, the second plane HP2 extends through uppermost portion of the upper surface 730 of the mask seal 704 the third plane HP3 extends along the uppermost portion of the paddles 726, and the fourth plane HP4 extends along a lowermost portion of a face contacting surface of the mask seal 704. In the illustrated configuration, the second plane HP2 also extends through the uppermost portions of the upwardly projecting portions 716 of the wings 714. In some configurations, the upwardly projecting portions 716 may extend above the upper surface 730 and, in some configurations, the upwardly projecting portions 716 of the mask base 702 may not extend as far upward as the upper surface 730. In the illustrated configurations, the planes have the following order from top to bottom: HP3, HP2, HP1 and HP4. Preferably, HP2 is positioned between HP1 and HP3. In some configurations, the distance between the plane HP2 and the plane HP3 is between about 10 mm and about 25 mm. In some configurations, the distance between the plane HP2 and the plane HP3 is between about 15 mm and about 22 mm. In some configurations, the distance between the plane HP2 and the plane HP3 is about 17 mm.

The paddles 726 and the upper surface 730 define a valley 732. The valley 732 can be adapted to receive the tip of the nose of the user, as shown in Figures 71 and 72. The valley 732 in the illustrated configuration is open in an upwardly direction. In other words, the region of the illustrated mask assembly 700 that accommodates the nose is not enclosed from the top and is configured to rest under the nose. In the illustrated configuration, the valley is positioned vertically higher than the plane HP1, which extends through the highest portion of the central portion 712 of the mask base 702. In the illustrated configuration, the valley 732 can extend downward into the region of the second plane HP2, which extends along the uppermost portions of the mask base 702. In some configurations, the valley 732 extends downward to a location just vertically lower than the second plane HP2. In some configurations, the valley 732 extends downward to a location just vertically higher than the second plane HP2. In some configurations, the distance between the valley and the second plane HP2 is between about -5 mm and about 5 mm.

With reference to Figure 75, the rearmost portion 734 of the mask seal 704 preferably comprises at least two protrusions 736. The protrusions 736 can be integrally formed with the surrounding portions of the mask seal 704 or can be separate components that are secured to the surrounding portions of the mask seal 704. In the illustrated configuration, the protrusions 736 are formed in an integrated molding with the surrounding portions of the mask seal 704, which improves the service life of the mask seal and simplifies manufacture. In some configurations, the protrusions 736 can be formed of a softer material, such as a softer grade of silicone, for comfort. In some

2012331716 07 Jun 2017

configurations, the protrusions 736 can be formed to have a thinner cross-section. In the illustrated configuration, however, the protrusions have a cross-sectional thickness that is substantially consistent with the surrounding portions of the mask seal 704. In some configurations, the protrusions 736 can be formed of a harder material, such as a harder grade of silicone, for better sealing. In some configurations, the protrusions 736 can be formed to have a thicker cross-section than the surrounding region, which increases the perceived hardness or rigidity.

The protrusions 736 are configured to improve sealing with the face of the user by helping to fill pockets generally encountered adjacent to the nose on the face (e.g., recesses defined by the maxilla just below the infraorbital foramen) and, as such, the protrusions 736 form means for sealing with facial contours in a region adjacent a nose of a user. The protrusions 736 extend rearward (i.e., toward the user) from the surrounding portions of the mask seal 704. The protrusions 736 can have a height (i.e., can extend away from the immediately surrounding portions by a distance) of between about 0 mm and about 5 mm relative to the surrounding portions of the mask seal 704. In some configurations, the protrusions 736 can have a height of between about 1.0 mm and about 3.0 mm. In some configurations, the protrusions 736 can have a height of about 2.0 mm.

At least a portion of each of the protrusions 736 can be positioned vertically between the plane HP2 and the plane HP1. In some configurations, at least a portion of the protrusions 736 is positioned vertically between the upper surface 730 (at least the uppermost extent) and the uppermost portion of the oral opening 722. In some configurations, each of the protrusions 736 has one or more peak 738 and the peak 738 is positioned vertically between the upper surface 730 (at least the uppermost extent) and the uppermost portion of the oral opening 722. In some configurations, the peak 738 is positioned vertically between a portion of the nasal opening 724 and a portion of the oral opening 722. In some configurations, the peak 738 is positioned closer to the nasal opening 724 than to the oral opening 722.

The illustrated mask seal 704 is designed to anchor on two locations of the face of the user: under the nose and below the lower lip. In some configurations, the mask seal 704 is configured to anchor below the nose and between the lower lip and the chin. In the illustrated configuration, the mask seal 704 is designed to anchor proximate the second and fourth planes HP2, HP4. In some configurations, both anchor points are positioned between the second and fourth planes HP2, HP4. In some configurations, an upper anchor point AP1 and a lower anchor point AP2 are vertically separated from each other by a gap of between about 40 mm and about 65 mm. In some configurations, the upper anchor point AP1 and the lower anchor point AP2 are separated by a gap of less than about 65 mm. In some configurations, the upper anchor point AP1 and the lower

2012331716 07 Jun 2017

anchor point AP2 are separated by less than about 60 mm. In the illustrated configuration, the mask seal 704 also extends above the second plane HP2 with the paddles 726. In some configurations, the mask is designed to seal off airflow through the mask assembly 700 by sealing against the face of the user at locations higher than all of the anchor points. Thus, at least some sealing portions of the illustrated mask seal 704 are positioned vertically higher than the anchor points.

The mask seal 704 can have different sizes for use with faces having different sizes and/or geometries. In some configurations, different portions of the mask seal 704 can be sized and configured to accommodate users having different sizes and/or geometries. For example, portions of the mask seal 704 can extend upward to different degrees for different users. With reference to Figure 75, a sloping plane SP2 that extends generally parallel to the plane SP1 can extend along an outer edge of the paddles 726. In some configurations, the sloping plane SP2 can be spaced apart from the plane SP1 by between about 10 mm and about 30 mm. In some configurations, the sloping plane SP2 can be spaced apart from the plane SP1 by between about 15 mm and about 25 mm. In some configurations, the sloping plane SP2 can be spaced apart from the plane SP1 by about 21 mm. The distance between the planes is related to the vertical extent of contact with the face. In some configurations, a single size mask seal 704 can be provided for all face sizes and geometries.

In some configurations, the mask seal 704 comprises multiple components formed of differing materials and/or differing shore hardnesses. For example, in some configurations, some components of the mask seal 704 can be formed of silicone, while other components are formed of foam, gels, cloth or other suitably compliant materials. For example, in the illustrated configuration, the mask seal 704 comprises a nasal pad insert 740, which is formed from a differing materials and/or differing shore hardness.

The nasal pad insert 740 is shown exploded from the mask seal 704 in Figures 77 and 78. The nasal pad insert 740 can be formed from a different grade of silicone relative to other portions of the mask seal 704. In some configurations, the nasal pad insert 740 can be formed from a softer grade of silicone relative to other face contacting portions of the mask seal 704.

Moreover, in some configurations, the nasal pad insert 740 have a portion that is thicker in cross-section than any other face-contacting portion of the mask seal 704. In some configurations, the nasal pad insert 740 has a maximum thickness that is thicker than any portion of the mask seal 704 that surrounds the nasal pad insert 740. In some configurations, the nasal pad inset 740 has a minimum thickness that is thicker than any portion of the mask seal 704 that surrounds the nasal pad insert. In some configurations, the nasal pad insert 740 has a maximum thickness that is thicker than any other portion of the mask seal 704. With regard to thickness, as thickness increases,

2012331716 07 Jun 2017

a perceived hardness is believed to increase even if the nasal pad inset 740 is formed of a softer grade silicone. Thus, in some configurations, the face contacting portions of the nasal pad insert 740 have a thickness of between about 1.0 mm and about 8.0 mm, or between about 2.0 mm and about 5.0 mm, especially when formed from silicone. In some configurations, the nasal pad insert has a region with a thinner cross-section for comfort. In some configurations, at least a portion of the nasal pad insert can have a thickness that is sufficiently small to allow inflation of that portion of the nasal pad insert. In some configurations, the nasal pad insert can have at least a portion that is less than about 0.3 mm thick. In some configurations, the nasal pad insert can have at least a portion that is less than about 0.2 mm thick. In some configurations, the nasal pad insert comprises variable thickness over at least a portion of the nasal pad insert.

The mask seal 704 can comprise a pad support region 742 that connects with the nasal pad insert 740. The pad support region 742 can be recessed or not. In the illustrated configuration, the pad support region 742 is recessed to help orient, locate and/or secure the nasal pad insert 740 in position.

The nasal pad insert 740 can be secured to the mask seal 704 in any suitable manner. In the illustrated configuration, the nasal pad insert 740 can be secured to the pad support region 742 in any suitable manner. For example, the nasal pad insert 740 can be comolded, overmolded, adhered, cohered or mechanically coupled to the mask seal, or a portion of the mask seal 704 such as the pad support region 742.

With reference to Figure 78, the mask seal 704 and the nasal pad insert 740 can include features that key the location of the nasal pad insert 740 to the mask nasal seal 704. For example, at least one keying recess 744 can be provided along a portion of the pad support region 742, for example but without limitation. In the illustrated configuration, three recesses 744 are provided that are formed in a generally triangular pattern. The illustrated generally triangular pattern is arranged such that the pattern generally overlies the at least one nasal opening 724. In some configurations, the at least one nasal opening 724 is centrally positioned within the pattern. With reference to Figure 77, the nasal pad insert 740 can comprises protrusions 746 that mate with the recesses 744. In some configurations, the protrusions 746 can comprise posts. The protrusions 744 can be integrally formed with the nasal pad insert 740 or can be formed separately and attached to the nasal pad insert 740. Any other suitable mating or keying features can be used to locate the nasal pad insert 740 relative to the mask seal 704.

In the illustrated configuration, the recess 744 are closed on the bottom such that the nasal pad insert 740 need not fully seal any openings. In other words, if the recesses comprised an opening, then the nasal pad insert 740 would have to seal over those openings to reduce the likelihood of leaks. In some configurations, however, the recesses 744 can comprise an opening. In some such configurations, the nasal pad

2012331716 07 Jun 2017

insert 740 can be secured in position by sandwiching at least a portion of the mask seal 704 between the nasal pad insert 740 and a member on the other side of the mask seal 704 relative to the nasal pad insert 740. For example, the member on the other side can be secured to the protrusions 744. In any event, the interface between the nasal pad insert 740 and the mask seal 704 preferably is sealed. More particularly, in the region surrounding any opening, such as the nasal opening 724, the interface between the nasal pad insert 740 and the mask seal 704 preferably is sealed.

With reference again to Figure 78, the nasal pad insert 740 preferably is sized, shaped and configured to improve comfort of the user. For example but without limitation, the illustrated nasal pad insert 740 can comprise a sculpted axially central portion 750. The sculpted axially central portion 750 is recessed below the laterally outward edges 752. By sculpting the axially central portion 750 such that it is recessed, the nasal pad insert 740 is adapted to better cradle the more sensitive septum region of the user. In some configurations, the sculpting of the recessed region is predominately forward of the at least one nasal opening 724. In some configurations, the central portion 750 has a more pronounced recess in the portion forward of the at least one opening 724 compared to the portion rearward of the at least one opening. In some configurations, the recessed central portion 750 has a reduced thickness in the recessed regions.

In some configurations, the nasal pad insert 740 can be removable or replaceable. In some configurations, the nasal pad insert 740 can be replaceable to alter the mask assembly 700 to include a single nasal opening, a pair of nasal openings, more than a pair of nasal openings, a single or multiple nasal prongs, a single or multiple nasal pillows or any other suitable interface configuration. In some configurations, a kit can be provided that includes a mask base, a mask seal and a plurality of nasal pad inserts to allow experimentation to determine the most desired or effective configuration for any particular user. In some configurations, the nasal pad insert 740 is not removable or replaceable without damaging the mask seal 704 yet different nasal pad inserts 704 (e.g., any of the configurations described in the preceding sentence) can be provided to simply and easily vary the style of interface while using many of the same underlying components. For example, while a prongless and pillowless configuration may be desired by some for comfort, a prong can improve the ability to properly locate the mask assembly 700 on the face of the user while a pillow can further improve the ability to both locate the mask assembly 700 on the face of the user while also sealing in the nare of the user.

With reference to Figure 75, a nose contacting portion 754 (which can include or comprise the nasal pad insert 740) that generally or substantially encircles the nasal opening 724 slopes downward in a rearward direction from the second plane HP2 to the

2012331716 07 Jun 2017

first plane HP1. In some configurations, an angle γ is defined between a nose contacting plane SP1 and the plane HP1. In some configurations, the angle γ is between about 5 degrees and about 50 degrees. In some configurations, the angle γ is between about 15 degrees and about 40 degrees. In one configuration, the angle γ is about 30 degrees. In some configurations, it is possible for the nose contacting portion that generally or substantially encircles the nasal opening to be generally normal to the rear plane, to be generally horizontal in use, or to slope in the opposite direction from that shown in Figure 75.

A second sloping plane SP2 extends generally parallel to the first sloping plane SP1. In some configurations, the second sloping plane SP2 and the first sloping plane SP1 are separated by a distance of between about 10 mm and about 30 mm. In some configurations, the second sloping plane SP2 and the first sloping plane SP1 are separated by a distance of between about 15 mm and about 25 mm. In some configurations, the second sloping plane SP2 and the first sloping plane SP1 are separated by about 21 mm. In such a manner, the vertical and horizontal extents of the paddles 726 can be determined and the appropriate size paddles can be derived for a particular facial geometry.

The illustrated mask seal 704 of the mask assembly 700 comprises a fairly complex range and configuration of thicknesses. The thicknesses are varied to take advantage of different characteristics in different regions of the illustrated mask seal 704. For example, with reference to Figures 80 and 82, the mask seal 704 illustrates a connecting region 760 that generally corresponds to the thickened portion 721. The connecting region 760 generally encircles an opening that receives the mask base 702. The connecting region 760 can be the thickest portion of the seal member 704 in some configurations. The connecting region 760 joins the mask seal 704 to the mask base 702. Accordingly, the connecting region 760 preferably has sufficient thickness to provide sufficient rigidity for connection and to provide sufficient thickness for durability. In some configurations, the thickness of the connecting region is between about 2 mm and about 5 mm. In the illustrated configuration, the thickness is between about 3 and about 3.5 mm.

To reduce the incidence of wrinkling of the face contacting regions of the mask seal 704 during use, it has been found that the outer peripheral portions 762, which are generally adjacent to the face contacting portions of the mask seal 704, should be fairly rigid. With reference to Figures 81 and 82, the illustrated lower outer peripheral portions 762 extend along the generally vertically extending portions on the rear of the mask seal 704 and wrap slightly inward at a bottom of the rear of the mask seal 704. In addition, the lower outer peripheral portions 762 wrap from a rear facing side of the mask seal around to at least a portion of a laterally facing side of the mask seal 704. In some

2012331716 07 Jun 2017

configurations, the thickness of the outer peripheral portions can be between about 1.0 mm and about 1.5 mm. In the illustrated configuration, the outer peripheral portions 762 have a thickness less than that of the connecting region 760, and preferably have a thickness of about 1.25 mm. The upper outer peripheral portions 763 can be separated from the lower peripheral portions 762 and can have a different thickness. In some configurations, the upper outer peripheral portions 763 have a smaller thickness than the lower outer peripheral portions 762. In some configurations, the upper outer peripheral portions 763 can have a thickness of between about 0.5 mm and about 1.25 mm. In the illustrated configuration, the upper outer peripheral portions 763 can have a thickness of about 0.8 mm.

With reference to Figure 81, the illustrated mask seal 704 also has protruding portions 764, which generally correspond to the protrusions 736, including the peaks 738. The protruding portions 764, as discussed above, can be the same thickness or can be thicker or thinner than the surrounding portions. In the illustrated configuration, the protruding portions 764 have a thickness that is less than the outer peripheral portions 762. In some configurations, the protruding portions have a thickness of between about 0.2 mm and about 1.5 mm. In the illustrated configuration, the protruding portion has a thickness of about 0.7 mm.

With reference to Figure 81, the illustrated mask seal 704 also comprises an oral region 766. The oral region 766 in the illustrated mask seal 704 extends along at least a portion of the oral opening 722. In the illustrated configuration, the oral region 766 extends along at least a lower portion of the oral opening 722. In the illustrated configuration, the oral region 766 extends along at least the sides and the bottom of the oral opening 722. The oral region 766 provides a softer region that contacts the face. Accordingly, the oral region 766 can have a thinner cross-section. For example, in some configurations, the oral region 766 has a thickness less than that of the outer peripheral portions 762 and, in some configurations, has a thickness of between about 0.2 mm and about 1.0 mm. In the illustrated configuration, the thickness of the oral region is about 0.5 mm.

With reference to Figures 80 and 81, a nasal region 768 can wrap from the rear of the mask seal 704 toward the front. The nasal region 768 can include or underlie the nasal pad insert 740. Preferably, however, the nasal region 768 underlies the nasal pad insert 740 and includes the pad support region 742. Given a desire to gently seal against the lower portion of the nose, the nasal region 768 in the illustrated configuration has a fairly small thickness. In some configurations, the nasal region 768 has the smallest thickness of the mask seal 704. In the illustrated configuration, the nasal region 768 has a smaller thickness than the oral region 766. In some configurations, the thickness of

2012331716 07 Jun 2017

the nasal region 768 is between about 0.1 mm and about 0.5 mm. In some configurations, the thickness of the nasal region 768 is about 0.3 mm.

With continued reference to Figures 80-82, a transitional portion 770 having a transitioning thickness can be defined between the nasal region 768 and the outer peripheral portions 762, between the nasal region 768 and the connecting region 760, between the nasal region 768 and the oral region 766, between the oral region 766 and the outer peripheral portions 764, between the oral region 766 and the connecting region 760, between the outer peripheral portions 764 and the connecting region 760 and the like. In the illustrated configuration, the protruding portions 764 are generally surrounded by the transitional portion 770. Other configurations also are possible.

With reference to Figure 81 and Figures 83-88, various sections through the mask seal 704 shown in Figure 81 are presented. These sections help to illustrate the various transitions occurring within the mask seal 704 that is illustrated in Figures 80-82.

With reference to Figure 87 and 88, the paddles as shown in cross section. As illustrated therein, the paddles 726 can have a relatively thin cross section. In some configurations, the paddles can be formed at least in part with a cross section sufficiently thin to allow controlled inflation or controlled expansion at typical treatment pressures (e.g., about 3 to about 25 cm H2O). In some configurations, such a thickness might be lower than about 0.3 mm or lower than about 0.2 mm depending upon the material used. In some configurations, the portion of the paddles 726 that will contact the face comprises a generally constant cross-section.

In one configuration, the paddles have a thickened cross-section along the ridge that joins the laterally outer portion and the laterally inner portion. Thus, the paddles 726 can have a thicker section at a radiused portion that joins the inner portion and the outer portion. In some configurations, that thickened region can be between about 0.3 mm and about 1.25 mm. In some configurations, that thickened region is about 0.5 mm or about 1.0 mm. That thickened region helps to reduce the likelihood of wrinkling or creasing of the face contacting portions of the paddles 726 during use while allowing the laterally inner portions to be as thin as desired.

In some configurations, the paddles 726 comprise a thicker cross-section on the laterally outer portions with a thinner cross-section on the laterally inner portions. As shown in Figure 87, the laterally outside wall 772 of the paddles 726 can comprise a thicker cross-section that the remained of the paddle 726 at the same elevation. The thicker portion of the paddle 726 provides reinforcement to support the shape of the paddle 726 and to control the shape of the paddle 726 in use. Other techniques also can be used; however, using the thicker cross section has the advantage of providing a sufficiently soft structure with sufficient reinforcement for structural performance.

2012331716 07 Jun 2017

With reference now to Figures 89-109, several styles of headgear that can be used with the mask assembly 700, or with any of the mask assemblies described herein, will be described. With reference to Figure 71, the mask assembly 700 preferably is secured using headgear such that a force vector is generated on the mask assembly 700 that is upward, rearward, or a combination of upward and rearward. Because the mask assembly 700 is configured to anchor under the nose, and because a sealing force of the paddles 726 increases with upward pressure of the mask assembly 700 against to the bottom of the nose, the mask assembly is quite unique in the force vector most suited to the mask assembly 700. Nevertheless, in some configurations, the mask assembly can be used with headgear generating other directions of force vectors.

As will be apparent with reference to Figures 89-109, the illustrated headgear depicted in those figures advantageously does not feature a T-piece or any other component that extends upward over the bridge of the nose (or higher) from the associated mask assembly 700. In some configurations, neither the mask assembly nor the headgear assembly will contact the face of the user vertically higher than the eyes or horizontally between the outer edges of the eyes. Because of the construction of the mask assembly 700, the headgear used with the mask assembly need not contact the facial region of the use at all. In some configurations, the headgear does not connect the face of the user. In some configurations, the mask assembly 700 anchors onto the face in locations below the bridge of the nose. In some configurations, the mask assembly 700 anchors onto the face in locations lower than the lowermost surfaces of the nose. In some configurations, the mask assembly 700 only anchors onto the face in locations lower than the lowermost surfaces of the nose and the headgear assembly does not contact the face of the user. In some configurations, the mask assembly 700 anchors on the mandible and the nose along the maxilla and the headgear does not contact the face in a region vertically higher than the lowermost portion of the nose. In some configurations, the mask assembly 700 anchors on the mandible and the nose along the maxilla and the headgear does not contact the face in a region vertically higher than the bottom of the ear. In some configurations, the mask assembly 700 anchors on the mandible and the nose along the maxilla and the headgear does not contact the face in a region vertically higher than the eyes. In some configurations, the mask assembly 700 anchors in at least two locations vertically lower than the nose and the headgear does not contact the face in a region defined directly vertically above the mask assembly 700. In some configurations, the mask assembly 700 is secured against upward movement by a facial feature of the user and the headgear assembly applies an upwardly directed force to the mask assembly 700. In some such configurations, the facial feature is the lower portion of the nose. In some such configurations, the lower portion of the nose includes the nasal septum.

2012331716 07 Jun 2017

With reference initially to Figures 89-91, a headgear assembly 800 is shown connected to the mask assembly 700. The headgear assembly 800 generally comprises a rear strap 802 and a top strap 804. The rear strap 802 and/or the top strap 804 can be adjustable in length. In some configurations, at least one of the rear strap 802 and the top strap 804 can be fixed in length. In the illustrated configuration, the rear strap 802 is configured to pass around the back of the head at a location generally below the ear of the user while the top strap is configured to pass over the top of the head at a location generally forward of the ear. Other locations and configurations are possible. Moreover, in the illustrated configuration, the rear strap 802 and the top strap 804 can be integrally formed. In some configurations, the straps 802, 804 are separately formed and attached together using buckles or another other suitable configuration.

With continued reference to Figures 89-91, an extension 806 connects to one or both of the rear strap 802 and the top strap 804. Two arms 808 connect the extension 806 to the mask assembly 700 in the illustrated configuration. In some configurations, the two arms 808 are formed from a single strap. In some configurations, the two arms 808 are formed from two straps. Advantageously, the two arms 808 in the illustrated configuration can be separately adjusted in length and, as such, preferably are formed from two separate straps. Nevertheless, it is possible to have both arms 808 formed from a single component with each of the arms 808 being separately adjustable. By being separately adjustable, the arms 808 enable the illustrated headgear assembly 800 to adjust the angle of the mask. In other words, the mask assembly 700 can be tilted into a desired angular orientation using the arms 808. In addition, because the arms 808 are separately adjustable, the fit of the lower portion of the seal 704 can be adjusted separately from the fit of the upper portion of the seal 704.

With reference now to Figures 92-94, another headgear assembly 810 is illustrated therein. The illustrated headgear assembly 810 comprises an upper portion 812 and a lower portion 814. While the illustrated upper portion 812 is separate from the lower portion 814, in some configurations, the upper portion 812 and the lower portion 814 can be joined together. For example, in some configurations, straps can connect the upper and lower portions 812, 814 to form a single integrated headgear assembly 810. In some such configurations, the interconnecting straps can be positioned such that they would be positioned rearward of the ears or just forward of the ears. Other configurations are possible.

In the illustrated configuration, the lower portion 814 comprises a member 816 that connects to the mask assembly 700 in any suitable manner. In some configurations, the member 816 connects with hooks, snaps or other suitable types of connectors. In some configurations, the member 816 extends through loops and is secured back upon itself. In the illustrated configuration, the member 816 is a single

2012331716 07 Jun 2017

component. In some configurations, the member 816 may comprise multiple components. Preferably, the member 816 passes around the back of the head at a location that is generally below the ear of the user.

With reference still to Figures 92-94, the upper portion 812 generally comprises a member 820 and a top member 822. The member 820 and/or the top member 822 can be adjustable in length. In some configurations, at least one of the member 820 and the top member 822 can be fixed in length. In the illustrated configuration, the member 820 is configured to pass around the back of the head at a location that would generally intersect at least a portion of the ear of the user while the top member 822 is configured to pass over the top of the head at a location that also would generally intersect vertically over the ear. As illustrated, the member 820 can have a portion 824 that is configured to wrap up and over the ear. Other locations and configurations are possible. Moreover, in the illustrated configuration, the member 820 and the top member 822 can be integrally formed and can meet at a location generally above the ear of the user. In some configurations, the member 820, 822 are separately formed and attached together using buckles or another other suitable configuration.

The headgear assembly 810 enables separate adjustment of the upper portion 812 and the lower portion 814. As described above, by being separately adjustable, the upper portion 812 and the lower portion 814 enable the illustrated headgear assembly 810 to adjust the angle of the mask assembly 700 as shown in Figure 93. In other words, the mask assembly 700 can be tilted into a desired angular orientation using the separately adjustable upper and lower portions 812, 814. In addition, because the upper and lower portions 812, 814 are separately adjustable, the fit of the lower portion of the seal 704 can be adjusted separately from the fit of the upper portion of the seal 704.

With reference now to Figures 95-97, a further headgear assembly 830 is illustrated. The headgear assembly 830 is shown connected to the mask assembly 700. The illustrated headgear assembly 830 comprises an upper portion 832 and a lower portion 834. As shown in Figure 97, at least one interconnecting member 836 connects the upper portion 832 to the lower portion 834. The at least one interconnecting member 836 in the illustrated configuration comprises a back panel that joins the upper portion 832 to the lower portion 834 in the region of the back of the head of the user. The illustrated interconnecting member 836 is generally hour glass in shape. Other configurations are possible.

In the illustrated configuration, the lower portion 834 comprises at least one member 838 that connects to the mask assembly 700 in any suitable manner. In some configurations, the at least one member 838 connects with hooks, snaps or other suitable types of connectors. In some configurations, the at least one member 838 extends through loops and is secured back upon itself. In the illustrated configuration, the at

2012331716 07 Jun 2017

least one member 838 is a single component. In some configurations, the at least one member 838 may comprise multiple components. For example, two components may extend forward from the interconnecting member 836. Preferably, the at least one member 838 extends from the mask assembly 700 toward the back of the head at a location that is generally below the ear of the user.

With reference still to Figures 95-97, the upper portion 832 generally comprises at least one member 840 and a top member 842. The at least one member 840 and/or the top member 842 can be adjustable in length. In some configurations, at least one of the at least one member 840 and the top member 842 can be fixed in length. In the illustrated configuration, the at least one member 840 is configured to pass around the back of the head at a location that would generally pass directly from the mask assembly 700 along a location vertically above the ear of the user to the back of the head while the top member 842 is configured to pass over the top of the head at a location that would generally intersect vertically over the ear. Other locations and configurations are possible. Moreover, in the illustrated configuration, the member 840 and the top member 842 can be integrally formed and can meet at a location generally above the ear of the user. In some configurations, the member 840, 842 are separately formed and attached together using buckles or another other suitable configuration.

The headgear assembly 830 enables separate adjustment of the upper portion 832 and the lower portion 834. As described above, by being separately adjustable, the upper portion 832 and the lower portion 834 enable the illustrated headgear assembly 830 to adjust the angle of the mask assembly 700. In other words, the mask assembly 700 can be tilted into a desired angular orientation using the separately adjustable upper and lower portions 832, 834. In addition, because the upper and lower portions 832, 834 are separately adjustable, the fit of the lower portion of the seal 704 can be adjusted separately from the fit of the upper portion of the seal 704.

With reference now to Figure 98-100, a further headgear assembly 850 is illustrated. The headgear assembly 850 is shown connected to the mask assembly 700. The illustrated headgear assembly 850 comprises an upper portion 852 and a lower portion 854. In general, the headgear assembly 850 of Figures 98-100 is similar to the headgear 830 of Figures 95-97 with the exception of having no interconnecting member. Accordingly, the details described above with respect to the headgear 830 of Figures 95-97 generally applies equally to the headgear 830 of Figures 99-100.

In the illustrated configuration of Figures 98-100, the upper portion 852 and the lower portion 854 of the headgear assembly 850 can be formed of a single integrated component. In some configurations, a first member 856 and a second member 858 can be formed of a single component. For example, a single loop of material can extend through loops or the like on the mask to define both the first member 856 and the

2012331716 07 Jun 2017

second member 858. In some configurations, a separate top member 859 can be separate from the single component that defines the first member 856 and the second member 858 or can be integrally formed as part of the single component. Any suitable components can be used.

With reference now to Figures 101-103, a further headgear assembly 860 is illustrated. The headgear assembly 860 is shown connected to the mask assembly 700. As will be apparent from a comparison of Figures 98-100 and Figures 101-103, the headgear assembly 860 shown in Figures 101-103 is generally the same as the headgear assembly 850 shown in Figures 98-100 with the exception of the headgear assembly 860 comprising an upper portion 862 that is lacking a top member. The headgear assembly 860, as such, also comprises a lower portion 864 that is generally the same as the lower portion 854 of the headgear assembly 850 shown in Figures 98-100.

With reference now to Figures 104-106, a further headgear assembly 870 is illustrated. The headgear assembly 860 is shown connected to the mask assembly 700. As will be apparent from a comparison of Figures 101-103 and Figures 104-106, the headgear assembly 870 shown in Figures 104-106 is generally the same as the headgear assembly 860 shown in Figures 101-103 (including having an upper portion 862) with the exception of the headgear assembly 870 lacking a lower portion.

With reference now to Figures 107-109, a further headgear assembly 880 is illustrated. The headgear assembly 860 is shown connected to the mask assembly 700. Similar to the headgear 870 shown in Figures 104-106, the headgear 880 shown in Figures 107-109 comprises an upper portion 882 without including a lower portion. The upper portion 882 in the illustrated configuration comprises a member 884 that extends upwardly and rearwardly from the mask assembly 700. The member 884 can include an ear accommodation feature 886. The ear accommodation feature 886 is adapted to transfer forces from in front of the ear of the user to the rear of the ear of the user. Accordingly, the ear accommodation feature 886 enables the member 884 to sit lower on the head of the user such that, without the ear accommodation feature 886, the member 884 would intersect the ear of the user.

With reference to Figures 108 and 109, in the illustrated configuration, the member 884 bifurcates into an upper member 886 and a lower member 888 at a location just rearward of the ear of the user. In the illustrated configuration, the bifurcation location is adapted to be vertically higher than the ear of the user. Bifurcation of the member 884 into at least the upper member 886 and the lower member 888 can improve stability. Other configurations also can be used, including but not limited to using a wide strap instead of the at least two members 886, 888, incorporating a panel between the upper member 886 and the lower member 888, and the like. In addition, in the configuration illustrated in Figures 108 and 109, the connection point between the

2012331716 07 Jun 2017

headgear and the mask assembly is lower than the configuration illustrated in Figures 104-106.

A variety of headgear assemblies have been described through the present disclosure. In each of the headgear assemblies, it is possible to have one or more straps, members, components or the like formed to be more flexible than others within the same headgear assembly. For example but without limitation, in some configurations, the portion of the headgear assembly that extends around the back of the head can be more elastic or flexible than the portion of the headgear assembly that extends forward of the ears. In some configurations, the portion of the headgear assembly that extends forward of the ears can be more elastic or flexible than the portion of the headgear assembly that extends rearward of the ears. In some configurations, the more elastic, more flexible or more stretchable portion of the headgear assembly has a portion that overlaps with the less elastic, less flexible or less stretchable portion.

With reference now to Figure 110, an additional mask assembly 900 is illustrated. The illustrated mask assembly 900 is a combined oral nasal mask and is designed to seal below the nose (and/or within the nose) of the user, along a portion of the face extending lateral to the nose, as well as around the mouth of the user. In some configurations, the mask assembly 900 can be designed to go over the tip of the nose and, in such configurations, may seal in regions other than below the nose, within the nose, along a portion of the face extending lateral to the nose and around the mouth of the user.

As with the mask assembly 700, which is shown in Figure 71, the mask assembly 900 advantageously does not require contact with the bridge of the nose of the user. In the illustrated configuration, the mask assembly 900 does not extend over the bridge of the nose of the user. More particularly, the illustrated mask assembly 900 does not contact the bridge of the nose of the user. Even more particularly, the illustrated assembly 900 does not contact a forward facing portion of the bridge of the nose of the user. In some configurations, the assembly 900 does not contact the face in a region vertically higher than a generally horizontal plane LE extending along the lower edges of the eyes of the user.

In some configurations, the mask assembly 900 does not extend over the tip of the nose of the user. In some configurations, the mask assembly 900 preferably does not enshroud the tip of the nose of the user. In some configurations, the tip of the nose of the user extends over the adjoining portion of the mask assembly 900. In some configurations, the mask assembly 900 can be designed to go over the tip of the nose. In some configurations, the mask assembly 900 can be designed to enshroud the tip of the nose.

2012331716 07 Jun 2017

The mask assembly 900 preferably is adapted to extend around and seal over the wing or alar of the nose, which flares out to form a rounded eminence around the nostril. The mask assembly 900 can be adapted to seal within and around the surfaces that define the opening to the nostril, including the fleshy external end of the nasal septum, sometimes called the columella. In some configurations, the mask assembly 900 is adapted to extend upwardly to seal along at least a portion of the left and right dorsal side walls of the nose of the user. In some configurations, the mask assembly 900 is adapted to extend upwardly along at least a portion of the left and right dorsal side walls without extending upwardly to the region of the bridge of the nose of the user. As compared to the mask assembly 700 shown in Figure 71, the mask assembly 900 shown in Figure 110 can extend into the nasal air passageways and seal along the nasal air passageways as desired.

As illustrated, the mask assembly 900 comprises a mask base 902, a mask seal 904 attached to the mask base 902 and, while not shown, a connector can be attached to the mask base 902. The connector can be connected to the base 902 in any suitable manner, including but not limited to any manner discussed elsewhere within this application. For example, but without limitation, the connector can be connected to the base 902 such that the connector can swivel, pivot and rotate relative to the base 902. In some configurations, the connector can define a portion of a ball joint with the mask base 902, for example but without limitation, defining the other portion. The ball joint can have any suitable configuration and can be configured in accordance with the descriptions of ball and socket arrangements discussed elsewhere within this application. The connector facilitates connection to a supply conduit or the like for the supply of pressurized breathing gases. Any suitable connector can be used.

With reference to Figure 110, the mask base 902 will be described in greater detail. The mask base 902 provides a support structure of sorts for the mask assembly 900 in general and for the mask seal 904 more specifically. The mask base 902 can be formed from any suitable material. In some configurations, the mask base 902 is formed from a fairly rigid material. In some configurations, the mask base 902 is formed from a plastic material, such as a polycarbonate material.

With reference to Figure 110, in the illustrated configuration, the mask base 902 sweeps rearward from a central portion 912 with a pair of wings 914. As illustrated, the wings 914 can extend rearward and upward relative to the central portion 912 of the mask base 902. Accordingly, the illustrated wings 914 include upwardly projecting portions 916. The mask base 902 generally, and the upwardly projecting portions 916 of the wings 914 as an example, can provide reinforcement to the lateral portions of the mask seal 904.

2012331716 07 Jun 2017

The central portion 912 can have a vertical expanse that is lower than the height of the upwardly projecting portions 916 of the wings 914. Thus, when viewed from the front, the mask base 902 comprises an edge having a generally M-shaped appearance. In addition, when viewed from the front, an upper edge of a central area of the mask base 902 comprises a generally U-shaped appearance. By incorporating the recessed central portion 912 between the pair of wings 914, the mask base 902 can provide desired support to the mask seal 904 while providing adequate clearance for the nose of the user.

The mask base 902 and the mask seal 904 can be connected in any suitable manner. With reference to Figure 112, the mask base 902 comprises a generally circumscribing flange 920 and the mask seal 904 can be overmolded onto the flange 920 of the mask base 902. Any other suitable technique can be used to form the junction between the mask seal 904 and the mask base 902. In some configurations, the mask seal 904 can be formed to allow removal from the mask base 902. For example but without limitation, the mask seal 904 can include a groove and the mask base 902 can include a flange, or any other cooperating structures, such that the mask seal 904 can be removably connected to the mask base 902.

As shown in Figure 112, the illustrated mask seal 904 comprises a thickened region 921, which is thicker in cross-section, adjacent the juncture with the mask base 902. Such a configuration improves service life of the mask seal 904 as well as improves the integrity of the connection between the mask seal 904 and the mask base 902. In some configurations, the thickest region of the mask seal 904 is the thickened region 921.

The mask seal 904 is designed to seal against the face of the user. The mask seal 904 preferably is formed of a soft material, such as silicone, for example but without limitation. In some configurations, at least portions of the mask seal 904 can be textured to improve comfort to the user. For example, in some configurations, at least portions of the mold used to form the illustrated mask seal 904 can be bead blasted to provide a surface texture in at least the regions of the mask seal 904 that will contact the skin of the user. Other techniques for texturing one or more surface of the mask seal 904 can be used.

As shown in Figure 110, the illustrated mask seal 904 comprises an oral-nasal mask seal and, therefore, comprises at least one oral opening 922 and at least one nasal opening 924. In some configurations, the mask seal 904 can comprise a combined oral-nasal opening. In some configurations, such as the illustrated embodiment, the mask seal 904 can comprise more than one nasal opening 924. In the illustrated configuration, the mask seal 904 comprises nasal openings 924 defined within superstructures, such as pillows, prongs or the like. The illustrated configuration comprises prongs 927. In some

2012331716 07 Jun 2017

configurations, a single prong (or other superstructure) can be used. In other applications, two or more prongs (or superstructures) can be used. The prong or prongs (or other superstructures) enable the mask seal 904 to be more easily positioned as desired on the face of the user. In addition, through the user of a superstructure, such as a prong, for example but without limitation, the mask is easier to seal (e.g., the superstructure can seal within the nare rather than sealing under the nare or along the face) and the mask seal 904 is less likely to have the at least one opening 924 occluded partially or fully by the facial features of the user.

Any suitable prong 927 configuration can be used. In the illustrated configuration, the prong 927 generally tapers in an upwardly direction from a bulbous base 929 to the small opening 924. The opening 924 can be generally elliptical or ovular in shape. In addition, the transition from the bottom to the top of the prong 927 can be shaped to provide improved sealing for many different nasal opening geometries. As such, each prong 927 may be inclined toward a generally vertical central plane (e.g., a plane corresponding to a medial saggital plane of the user). In addition, the prong 927 may have a shape that increases in outer dimension in a non-uniform manner as best shown in Figure 114. In other words, the base 929 may grow in size from front to back more than from side to side. In addition, the base 929 may increase in dimension greater to the rear than to the front. Other configurations are possible.

The at least one oral opening 922 and the at least one nasal opening 924 preferably communicate with a single chamber 925 that is defined within the mask assembly 900. The chamber 925 of the illustrated mask assembly 900 is at least partially defined by the mask base 902 and the mask seal 904. The at least one oral opening 922 is substantially opposed to an opening 928 that receives the connector. The at least one nasal opening 924 can be vertically above the at least one oral opening 922. The at least one nasal opening 924 can be positioned between the opening 928 for the connector and the at least one oral opening 922.

With reference again to Figure 110, the mask seal 904 preferably comprises a pair of paddles 926 that extend upward above an upper surface 930. The paddles 926 are configured to extend upward alongside, and in some configurations above, the nares. Preferably, as shown in Figure 111, the upper surface 930 is hammocked between inner portions 933 of the paddles 926. In such a configuration, downward pressure applied to the upper surface 930 can cause the paddles 926 to pivot inwardly at the top. Accordingly, increasing force between the nose of the user and the upper surface 930 can result in increasing sealing force being applied between the sides of the nose of the user and the paddles 926. The degree to which the pivoting action results in increasing force can be varied by construction. In other words, longer paddles 926 display increased degrees of pivoting compared to shorter paddles 926. On the other hand, shorter

2012331716 07 Jun 2017

paddles 926 are capable of accommodating greater variations in nasal geometries compared to longer paddles 926 and result in the mask assembly 900 being easier to put onto the face.

The paddles 926 and the upper surface 930 define a valley 932. The valley 932 can be adapted to receive the tip of the nose of the user. The valley 932 in the illustrated configuration is open in an upwardly direction. In other words, the region of the illustrated mask assembly 900 that accommodates the nose is not enclosed from the top and is configured to rest under the nose.

In the illustrated configuration, as shown in Figure 112, the prongs 927 are positioned such that the at least one nasal opening 924 is positioned vertically lower than the uppermost extent of the thickened region 921. In some configurations, the prongs 927 can be positioned such that the at least one nasal opening 924 is positioned vertically higher than or at the same height as the uppermost extent of the thickened region 921.

As illustrated, forward of the prongs 927, the mask seal 904 tapers and curls downward toward the prongs 927 to define the upper surface 930 and the valley 932. The tapering and curling forms a deflection region 935. The deflection region 935 can be sufficiently thin and/or elastic that the mask seal 904 can inflate in the nasal region at least in the deflection region 935. In some configurations, both at least a portion of the inner portions 933 and the deflection region 935 are sufficiently thin to allow inflation around the nasal region of the user. In some configurations, the material is less than about 0.3 mm thick and more preferably less than about 0.2 mm thick. The deflection region 935 can also be sufficiently thicker and/or more rigid such that the mask seal 904 can retain its shape in the nasal region at least in the deflection region 935. In some configurations, both at least a portion of the inner portions 933 and the deflection region 935 are sufficiently thick for shape-retaining. In some configurations, the material is less than about 0.7 mm thick and more preferably less than about 0.5 mm thick.

As with the mask seal 700 described above and as shown in Figures 112-120, the illustrated mask seal 904 of the mask assembly 900 comprises a fairly complex range and configuration of thicknesses. The thicknesses are varied to take advantage of different characteristics in different regions of the illustrated mask seal 904. For example, with reference to Figures 112, the mask seal 904 illustrates a connecting region 960 that generally corresponds to the thickened portion 921. The connecting region 960 generally encircles an opening that receives the mask base 902. The connecting region 960 can be the thickest portion of the seal member 904 in some configurations. The connecting region 960 joins the mask seal 904 to the mask base 902. Accordingly, the connecting region 960 preferably has sufficient thickness to provide sufficient rigidity for connection and to provide sufficient thickness for durability. In some configurations, the

2012331716 07 Jun 2017

thickness of the connecting region is between about 2 mm and about 4 mm. In the illustrated configuration, the thickness is between about 3.3 mm and about 3.5 mm.

With reference primarily to Figure 120, outer peripheral portions 962, which are generally adjacent to the face contacting portions of the mask seal 904, can be fairly rigid. The outer peripheral portions 962 can extend from a lower corner of the face contacting portion surrounding the oral opening 922 upward to a region just below the start of the paddles 926. Thus, the outer peripheral portions 962 extend along the generally vertically extending portions on the rear of the mask seal 904 and wrap slightly inward at a bottom of the rear of the mask seal 904. The outer peripheral portions 962, however, terminate short of the ultimate central portion of the lower portion of the mask, which is softer to accommodate varied contours created by differing facial geometries of the users. The outer peripheral portions 962 also can wrap from a rear facing side of the mask seal around to at least a portion of a laterally facing side of the mask seal 904. In some configurations, the thickness of the outer peripheral portions can be between about 0.8 mm and about 1.5 mm. In the illustrated configuration, the outer peripheral portions 962 have a thickness less than that of the connecting region 960, and preferably have a thickness of about 1.2 mm to about 1.3 mm.

The mask seal 904 also comprises an oral region 966. The oral region 966 in the illustrated mask seal 904 extends along at least a portion of the oral opening 922. In the illustrated configuration, the oral region 966 extends along at least a lower portion of the oral opening 922. In the illustrated configuration, the oral region 966 extends along at least the sides and the bottom of the oral opening 922. The oral region 966 provides a softer region that contacts the face. Accordingly, the oral region 966 can have a thinner cross-section. For example, in some configurations, the oral region 966 has a thickness less than that of the outer peripheral portions 962 and, in some configurations, has a thickness of between about 0.3 mm and about 1.0 mm. In the illustrated configuration, the thickness of the oral region is about 0.5 mm.

The nasal prongs 927 can be formed within an interfacing region 967. The interfacing region 967 preferably has sufficient rigidity to locate within the nares of the user while remaining soft and deformable enough to be comfortable for the user over a night of use, for example. In the illustrated configuration, the interfacing region includes both of the prongs 927 as well as the immediately adjacent regions. In some configurations, the thickness of the interfacing region 967 is between about 1.5 mm and about 0.5 mm. In the illustrated configuration, the thickness is between about 0.8 mm and about 0.5 mm.

With reference to Figure 120, a paddle region 968 can wrap over the upper portions of the paddles 926. The paddle region 968 can generally surround the valley 932. The paddle region 926 preferably is very conformable and, as such, has a thickness

2012331716 07 Jun 2017

of between about 0.3 mm and about 1.2 mm. In the illustrated configuration, the paddle region 968 has a thickness of about 0.5 mm.

Between the paddle region 968 and the prongs 927 is a flexible zone 969. The flexible zone 969 preferably is formed along the inner portions 933 of the paddles 926. In some configurations, the flexible zone 969 is on each lateral side of the prongs 927. In some configurations, the flexible zone 969 extends on both lateral sides of the prongs 927 and wraps around to a location generally forward of the prongs 927. The flexible zone 969 overlies pockets defined within the paddles 926, which pockets are in fluid communication with the chamber 925. As such, pressure from within the chamber 925 can somewhat inflate, or cause bulging of, the flexible zones 969 to improve sealing with the nose of the user. The flexible zones preferably have a thickness of less than about 0.5 mm. In some configurations, the inflation zones 969 can have a thickness of between about 0.2 mm and about 0.7 mm. In the illustrated configuration, the inflation zones 969 have a thickness of about 0.2 mm.

With continued reference to Figure 120, a transitional portion 970 having a transitioning thickness can be defined between each of the regions described above. Other configurations also are possible.

With reference to Figures 113-119, various sections through the mask seal 904 shown in Figure 110 are presented. These sections help to illustrate the various transitions occurring within the mask seal 904.

With reference to Figures 114 and 115, the paddles 926 as shown in cross section. As illustrated therein, the paddles 926 can have a relatively thin cross section on an inner portion while have a significantly thicker outer portion. The thicker outer portion can help provide structure and shape while the inner portion remains sufficiently thin to allow controlled inflation or controlled expansion at typical treatment pressures (e.g., about 3 cm H2O to about 25 cm H2O). In some configurations, the portion of the paddles 926 that will contact the face comprises a generally constant cross-section. In the illustrated configuration, in the upper portions of the paddles 926 (see Figure 114), the transition between the thicker cross section and the thinner cross section occurs prior to the radius defined between the inner portion and the outer portion. Such a configuration improves the conformance of the paddles 926 to the facial geometry of the user. In the illustrated configuration, in the lower portions of the paddles 926 (see Figure 115), the transition between the thicker cross section and the thinner cross section occurs along a portion that will contact the face of the user such that greater control over deformation in the pocket between the nose and the cheek can be attained. Other configurations are possible.

The illustrated mask seal 904 is designed to anchor on two locations of the face of the user: under/within the nose and below the lower lip. In some configurations, the

2012331716 07 Jun 2017

mask seal 904 is configured to anchor below the nose (or within the nostrils) and between the lower lip and the chin. In some configurations, the mask is designed to seal off airflow through the mask assembly 900 by sealing against the face of the user at locations higher than all of the anchor points. Thus, at least some sealing portions of the illustrated mask seal 904 are positioned vertically higher than the anchor points.

The mask seal 904 can have different sizes for use with faces having different sizes and/or geometries. In some configurations, different portions of the mask seal 904 can be sized and configured to accommodate users having different sizes and/or geometries. For example, portions of the mask seal 904 can extend upward to different degrees for different users. In some configurations, a single size mask seal 904 can be provided for all face sizes and geometries.

In some configurations, the mask seal 904 comprises multiple components formed of differing materials and/or differing shore hardnesses. For example, in some configurations, some components of the mask seal 904 can be formed of silicone, while other components are formed of foam, gels, cloth or other suitably compliant materials. In the illustrated configuration, however, the mask seal 904 is formed of a uniform material, such as silicone for example but without limitation.

Although the present invention has been described in terms of a certain embodiment, other embodiments apparent to those of ordinary skill in the art also are within the scope of this invention. Thus, various changes and modifications may be made without departing from the spirit and scope of the invention. For instance, various components may be repositioned as desired. Moreover, not all of the features, aspects and advantages are necessarily required to practice the present invention. Accordingly, the scope of the present invention is intended to be defined only by the claims that follow.

2012331716 07 Jun 2017

WHAT IS CLAIMED IS:

1. An interface for use in providing positive pressure respiratory therapy, the interface comprising:

a mask assembly comprising a mask seal and a mask base, the mask assembly configured to be fully positioned lower than a bridge of a nose of a face of a user and the mask assembly configured to provide an exposed tip of the nose of the user;

the mask base comprising a central portion and a pair of wings sweeping rearwardly of the central portion, the wings having a greater vertical expanse than the central portion, an opening for a connector being formed on the mask base in the central portion;

the mask seal being connected to the mask base, the mask seal comprising a thickened region adjacent to the mask base, the mask seal comprising at least one oral opening on a lower portion and at least one nasal opening on an upper portion, the at least one oral opening being positioned opposite of the opening for the connector and the at least one nasal opening being positioned between the opening for the connector and the oral opening in a front to back direction;

and the mask seal comprising a first paddle and a second paddle, an upper surface being positioned between the first paddle and the second paddle such that a upwardly-open valley is defined by the first paddle, the upper surface and the second paddle, at least a portion of the at least one nasal opening being positioned on the upper surface within the valley, the first paddle comprising a first pocket and the second paddle comprising a second pocket, the first and second pockets being in fluid communication with a chamber defined within the mask assembly, and the paddles extending upward to some extent along lateral sides of the nose.

2. The interface of Claim 1, wherein the mask seal is adapted to seal under the nose of the user, along a portion of a face of the user adjacent to the nose and around a mouth of the user.

3. The interface of either Claim 1 or Claim 2, wherein the mask assembly is configured to not cover any forward facing portion of the nose of the user.

4. The interface of any one of Claims 1-3, wherein the upper surface is hammocked between inner portions of the first and second paddles.

5. The interface of Claim 4, wherein downward pressure on the upper surface causes the first and second paddles to deflect toward each other.

2012331716 07 Jun 2017

6. The interface of any one of Claims 1-5, wherein the seal member comprises a rear surface that is adapted to contact the face of the user and the rear surface comprises a first protrusion and a second protrusion.

7. The interface of Claim 6, wherein at least a portion of the first protrusion and at least a portion of the second protrusion are positioned vertically between the upper surface and an uppermost portion of the at least one oral opening.

8. The interface of Claim 7, wherein the portion of the first protrusion comprises a first peak and wherein the portion of the second protrusion comprises a second peak.

9. The interface of Claim 8, wherein the first peak and the second peak are positioned vertically between a portion of the at least one nasal opening and the at least one oral opening.

10. The interface of Claim 9, wherein the first peak and the second peak are positioned vertically closer to the at least one nasal opening than to the at least one oral opening.

11. The interface of any one of Claims 1-6, wherein the mask seal is adapted to anchor on two locations of the face.

12. The interface of Claim 11, wherein the mask seal is configured to anchor below the lower lip and below the nose, or

wherein the mask seal is configured to anchor below the lower lip but above the chin and below the nose, or

wherein the two locations are lower than the bottom of the nose but the mask seal extends upward beyond the bottom of the nose.

13. The interface of Claim 12, wherein the mask seal is adapted to seal against the face in locations vertically above the uppermost anchoring location.

14. The interface of any one of Claims 1-5, wherein the upper surface slopes downward and rearward in the region surrounding the at least one nasal opening.

15. The interface of any one of Claims 1-5, wherein outer peripheral portions have an increased rigidity relative to inwardly facing portions of the first paddle and the second paddle.

2012331716 07 Jun 2017

16. The interface of Claim 15, wherein the outer peripheral portions have an increased thickness relative to the inwardly facing portions of the first paddle and the second paddle.

17. The interface of any one of Claims 1-5 wherein the first paddle comprises a first ridge positioned between an outerwardly facing surface and an inwardly facing surface and wherein the second paddle comprises a second ridge positioned between an outwardly facing surface and an inwardly facing surface, the first and second ridge having an increased rigidity and/or an increased thickness relative to the inwardly facing surface.

18. The interface of any one of Claims 1-17 further comprising a headgear assembly adapted to provide a slightly upward force application between the mask assembly and the face of the user.

19. The interface of Claim 18, wherein the headgear assembly is configured to adjust an angle of the mask assembly, and/or

wherein the headgear does not include a T-piece and/or

wherein the mask assembly and the headgear assembly are configured such that no portion of the mask assembly or the headgear assembly will contact the face of the user at any location vertically above the eyes at a location horizontally between the outsides of the eyes.

20. The interface of any one of Claims 1-5, wherein the mask assembly comprises at least one nasal prong, or

wherein the mask assembly comprises at least one nasal prong and the at least one nasal prong is inclined toward a medial vertical plane of the mask assembly.

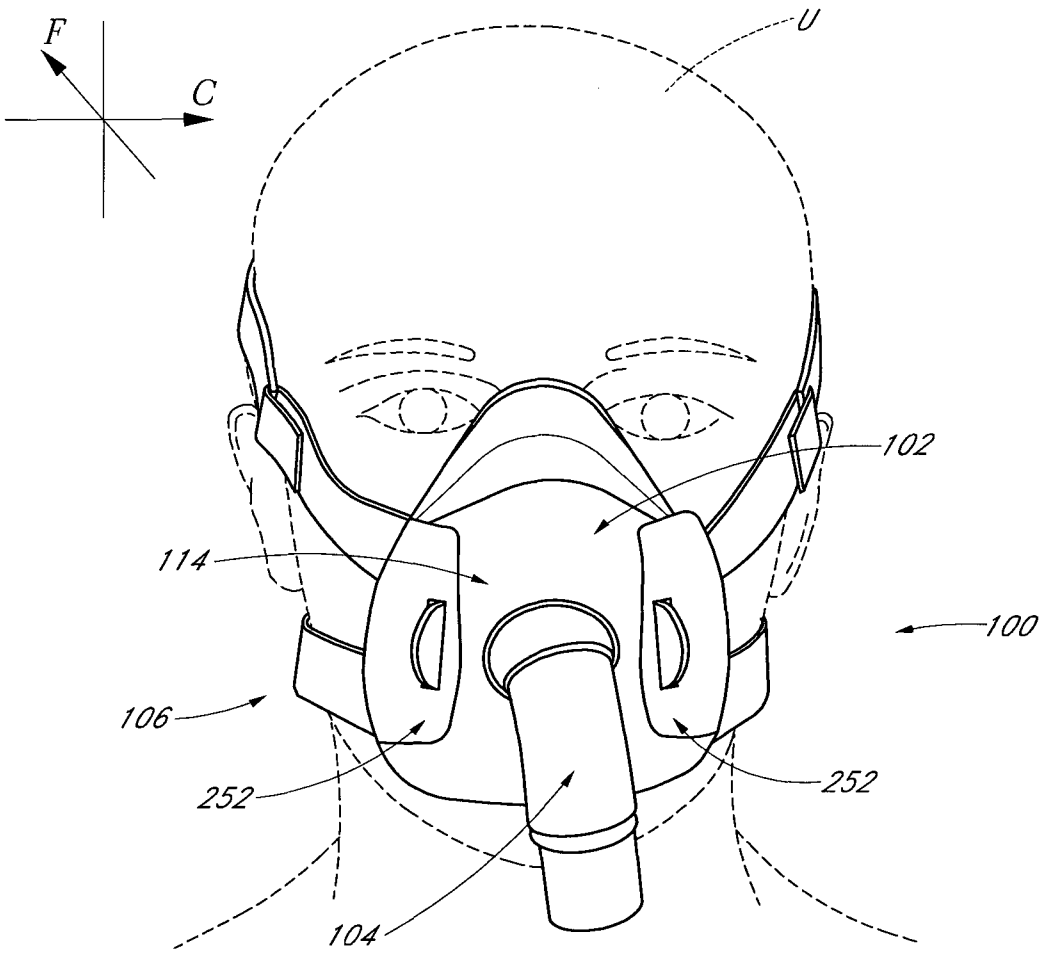

FIG. 1

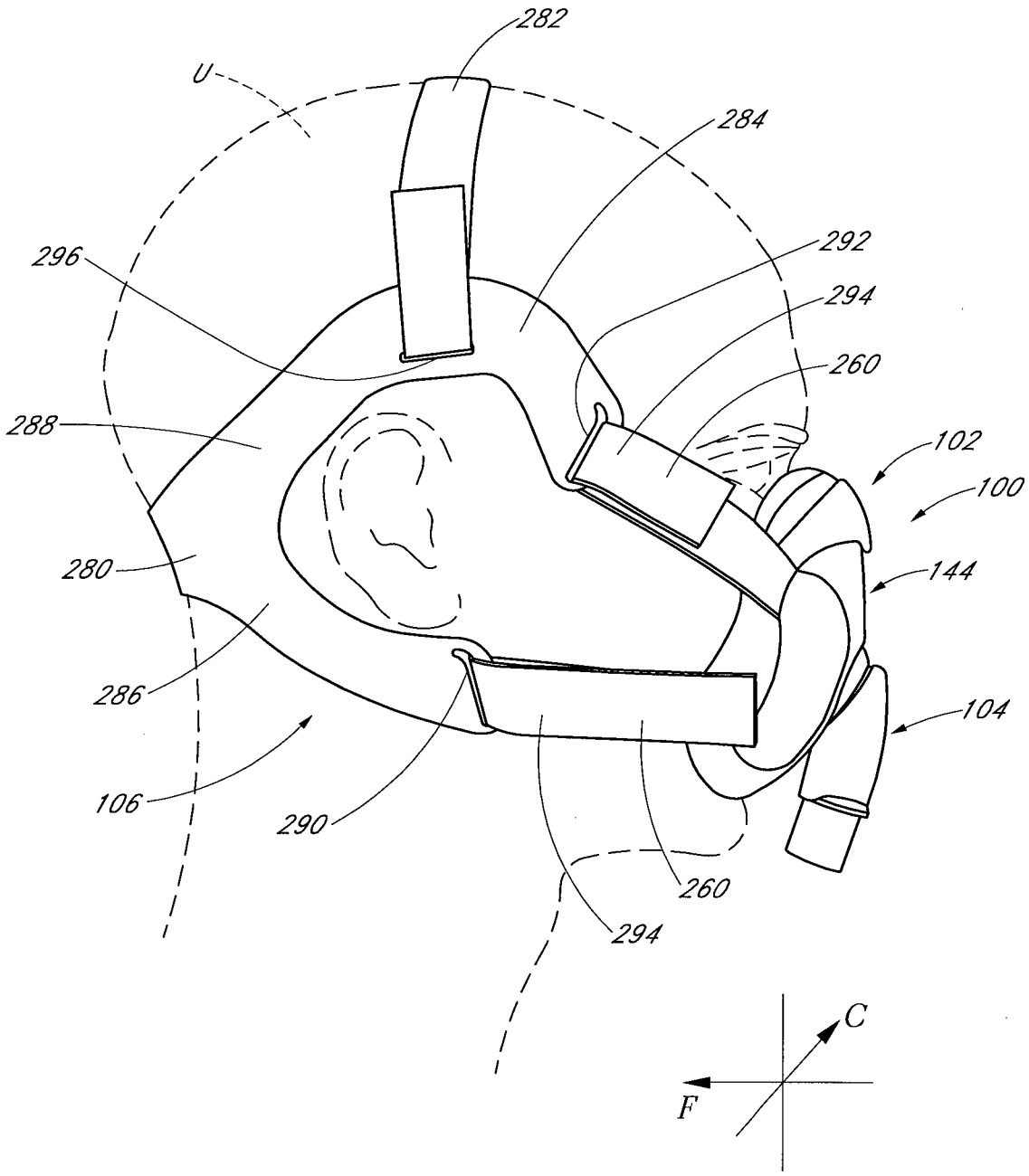
282
U
284
296
292
294
260
288
102
100
144
280
286
104
106
290
260
294
C
F

FIG. 2

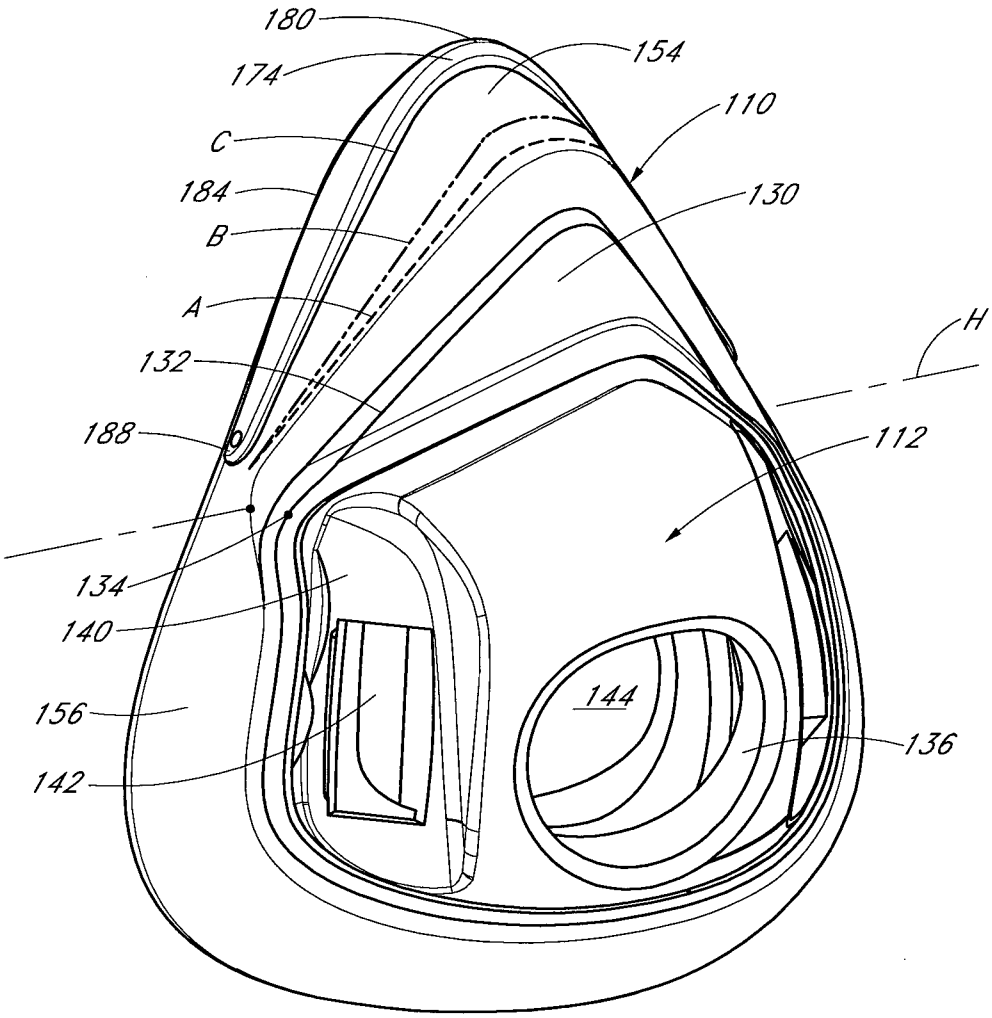

FIG. 3

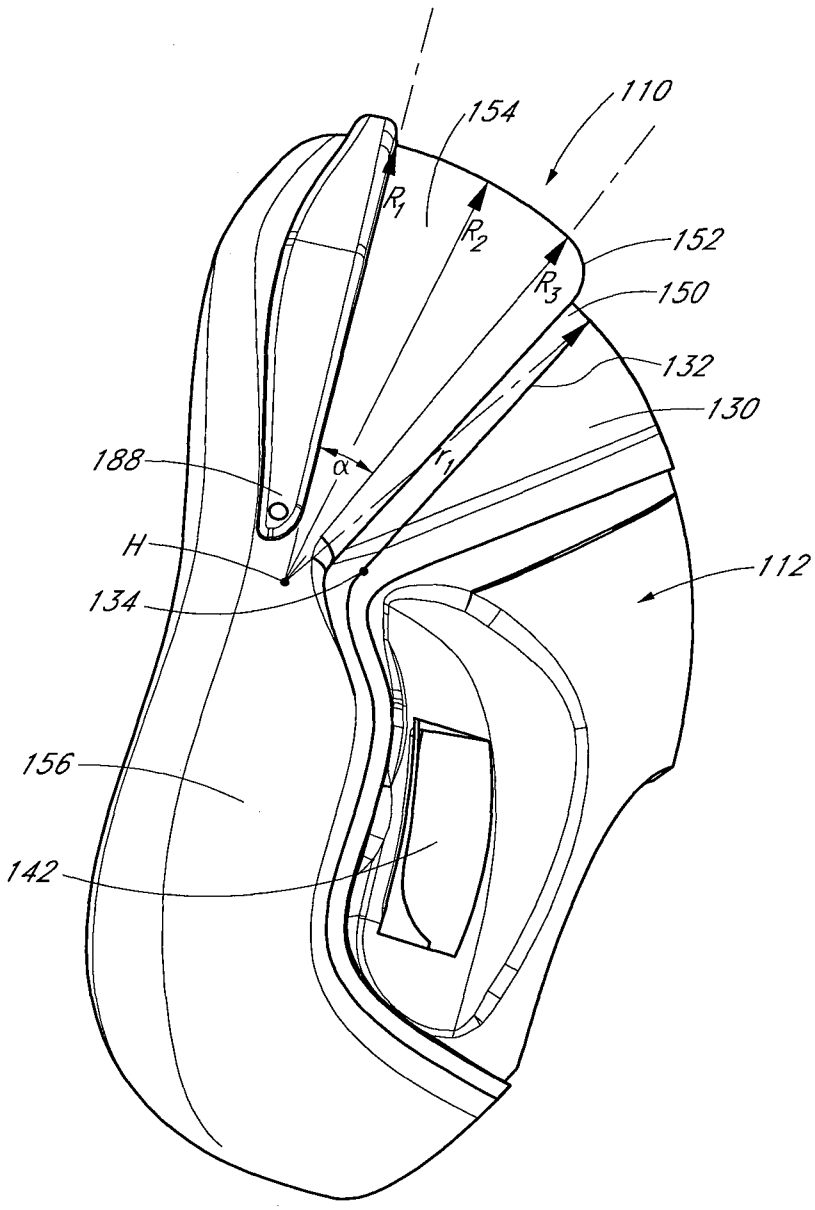

FIG. 4

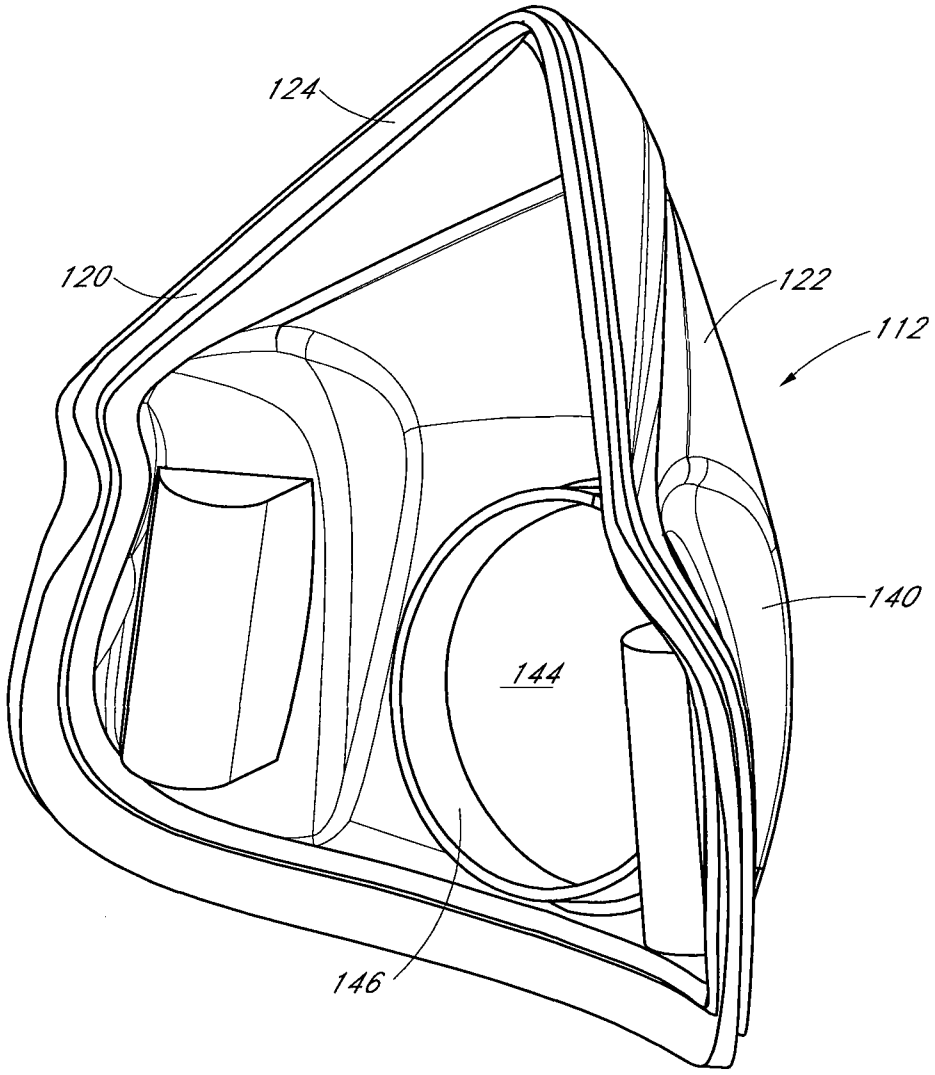

FIG. 5

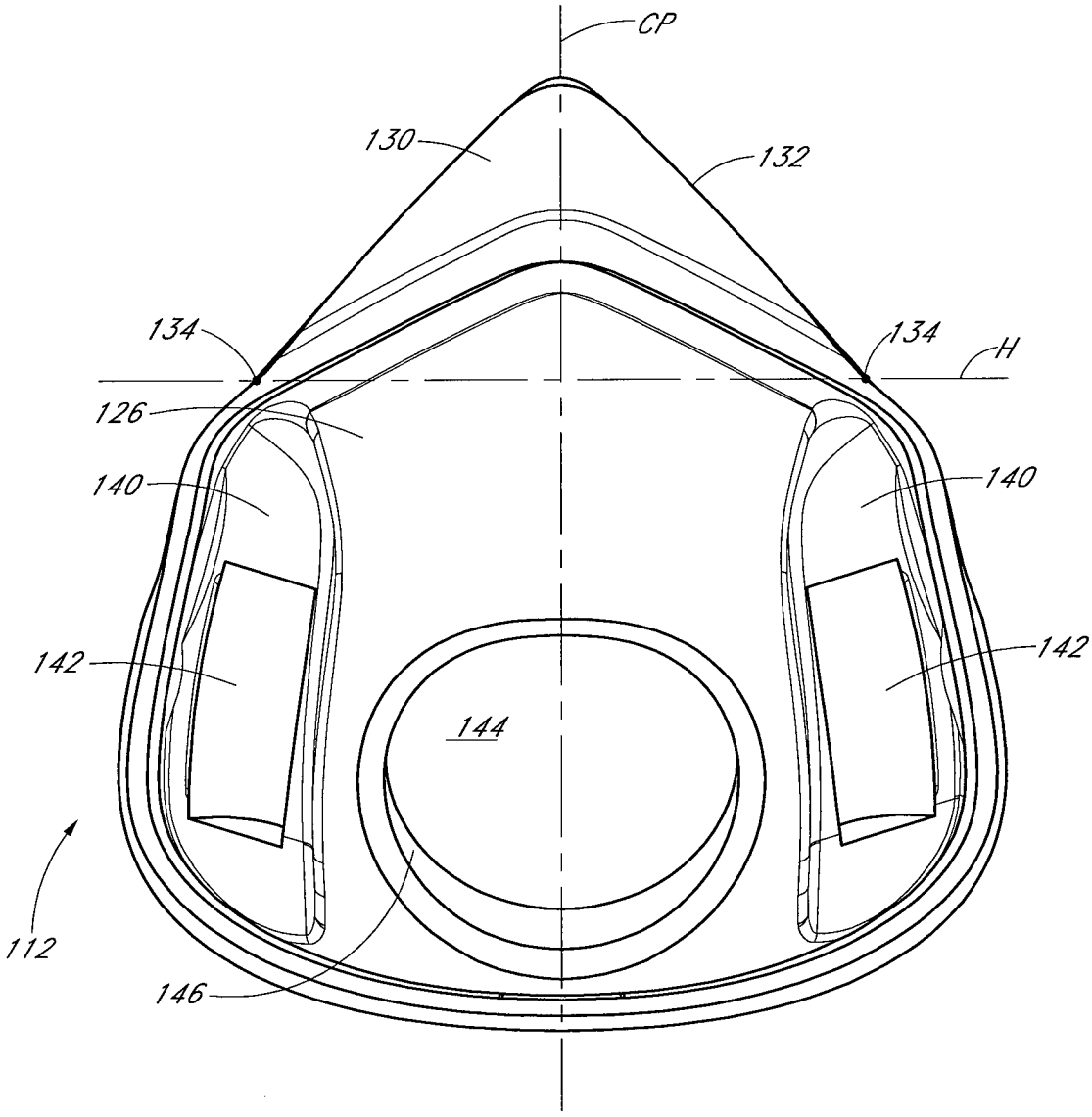

FIG. 6

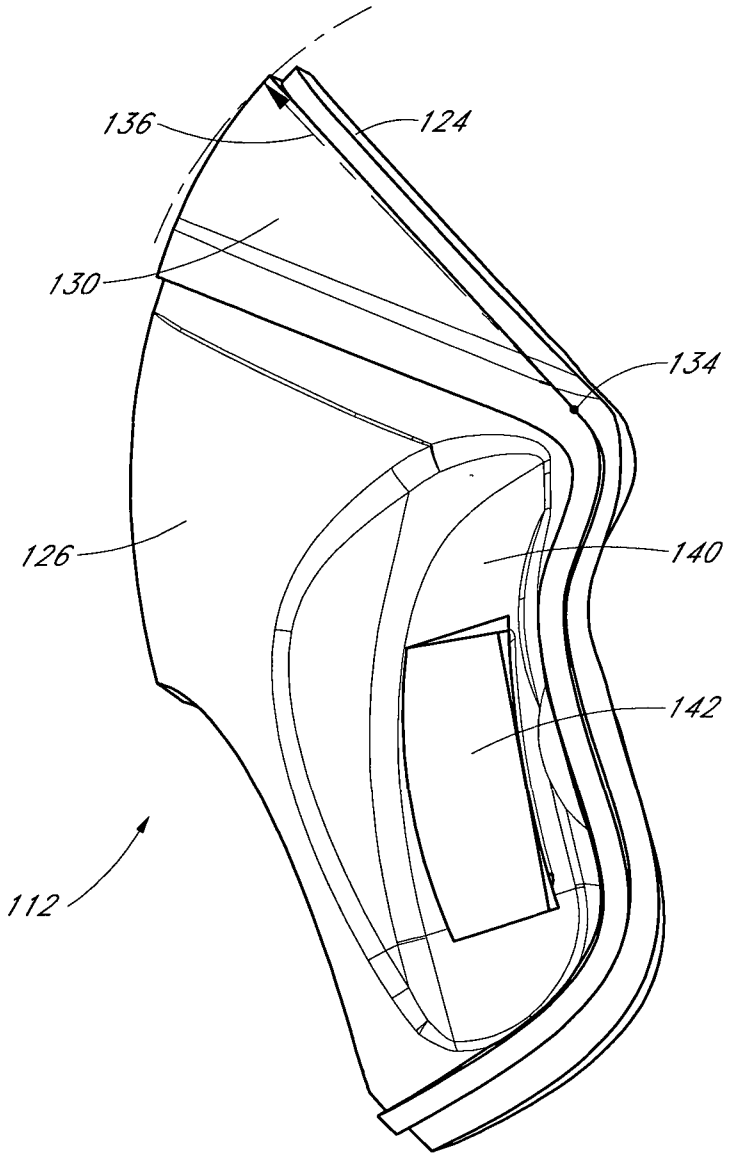

FIG. 7

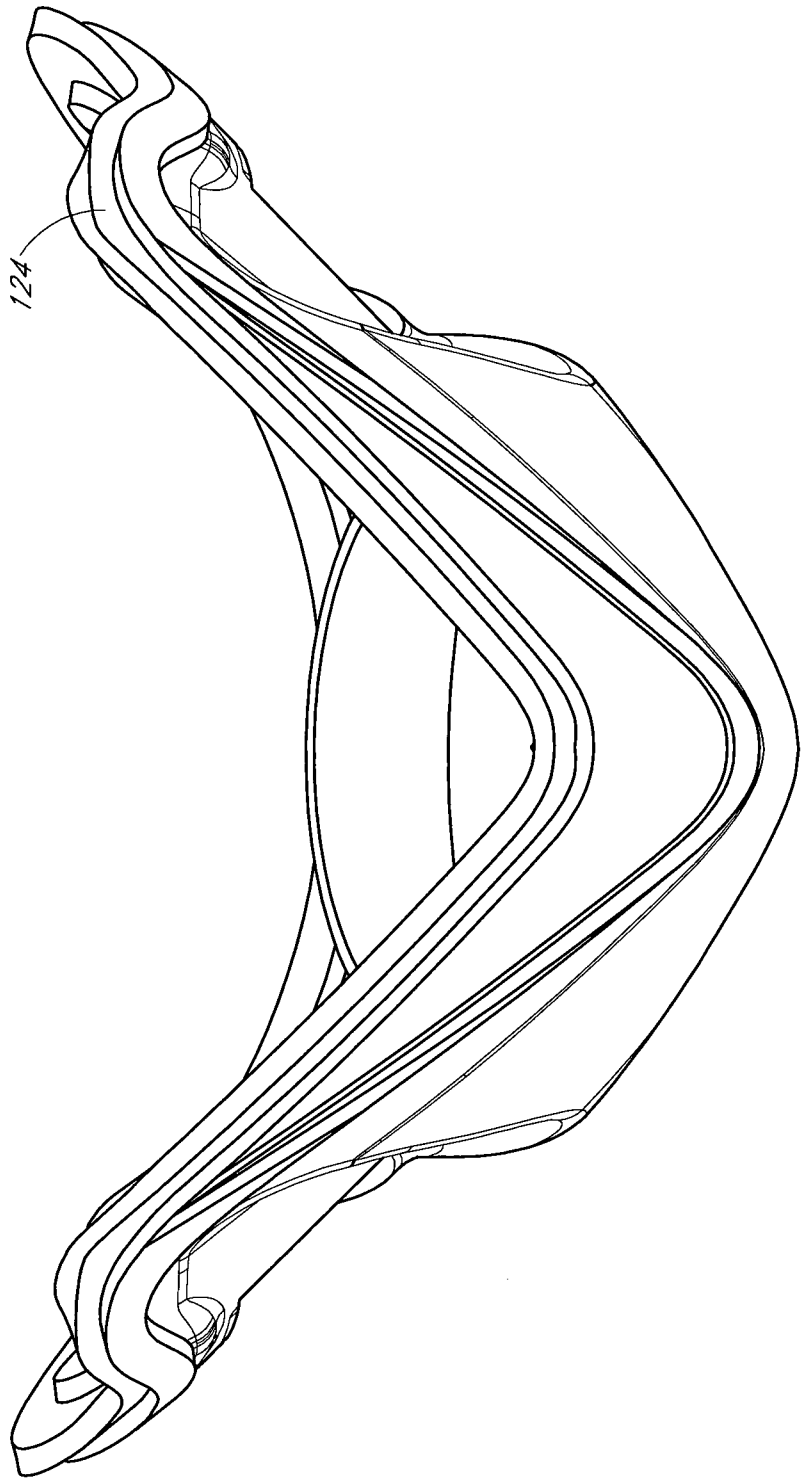

FIG. 8

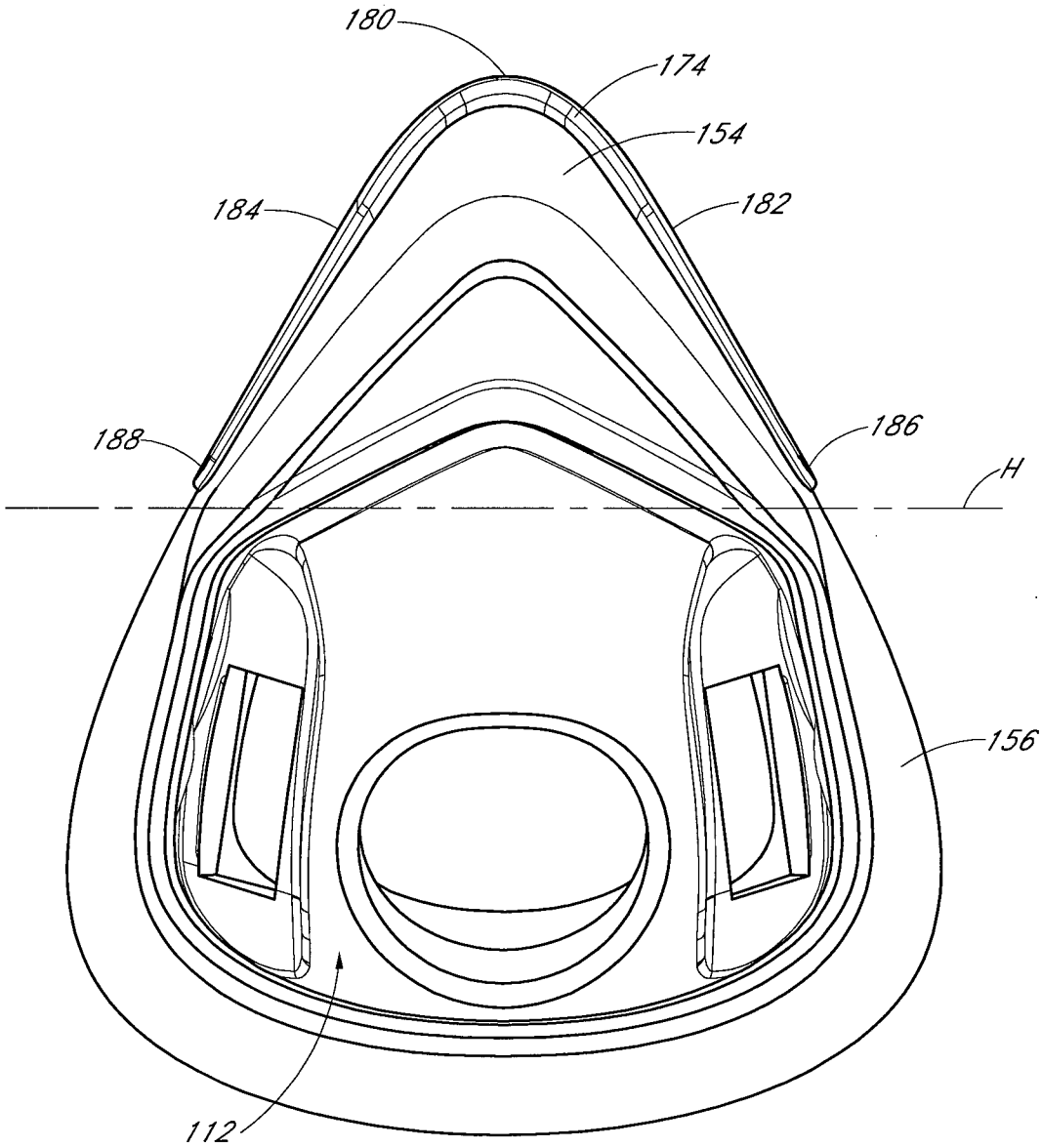

FIG. 9

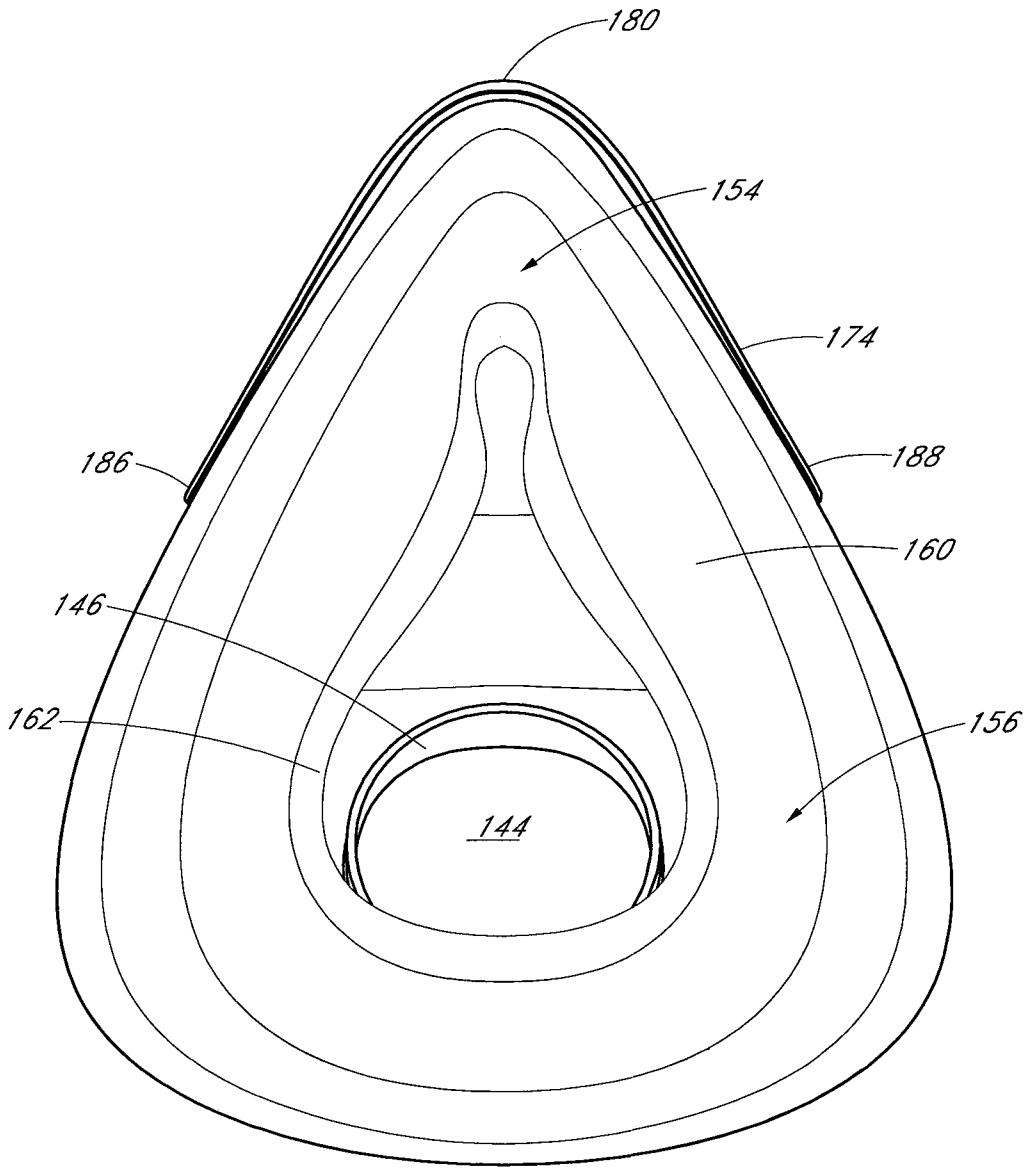

FIG. 10

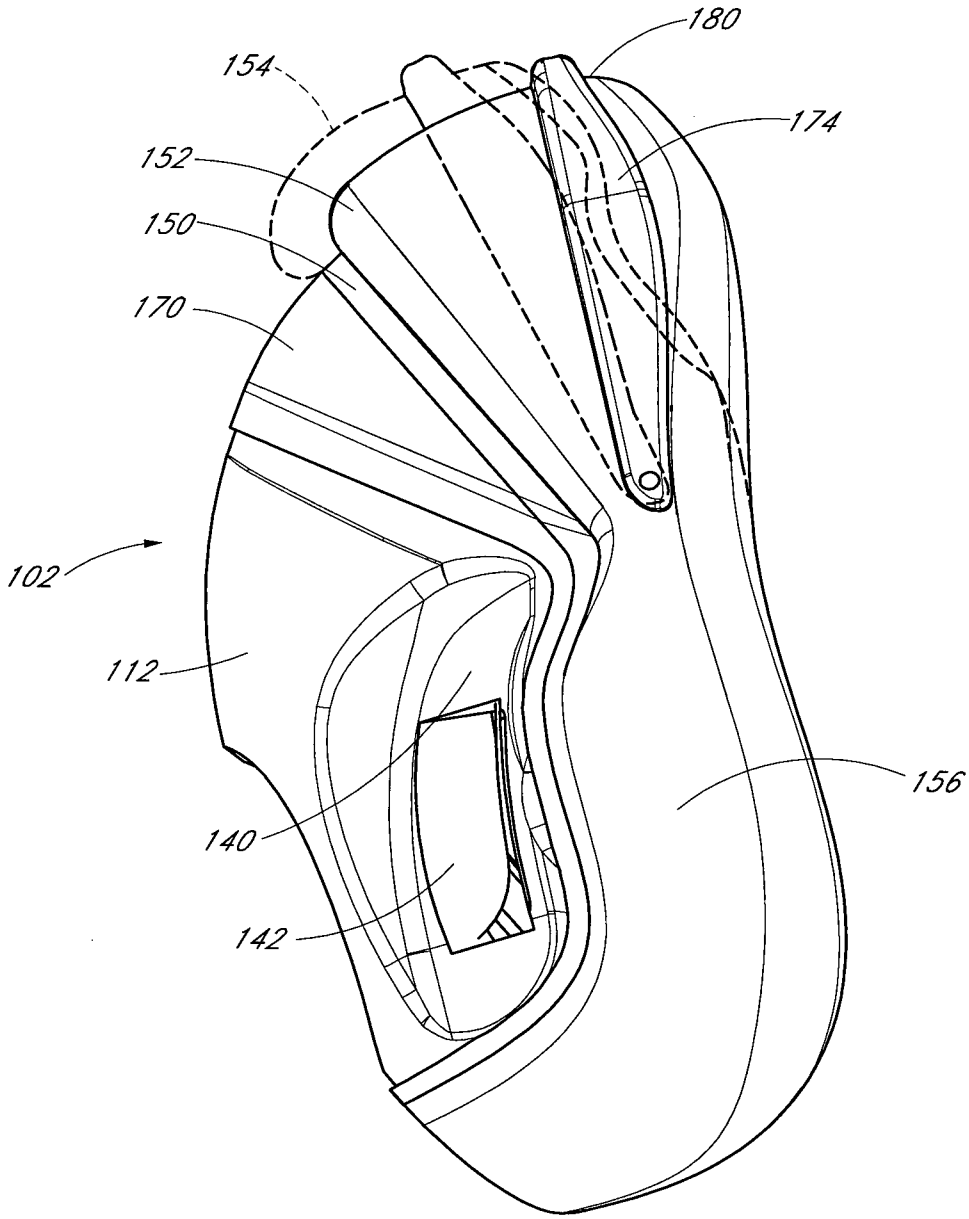

FIG. 11

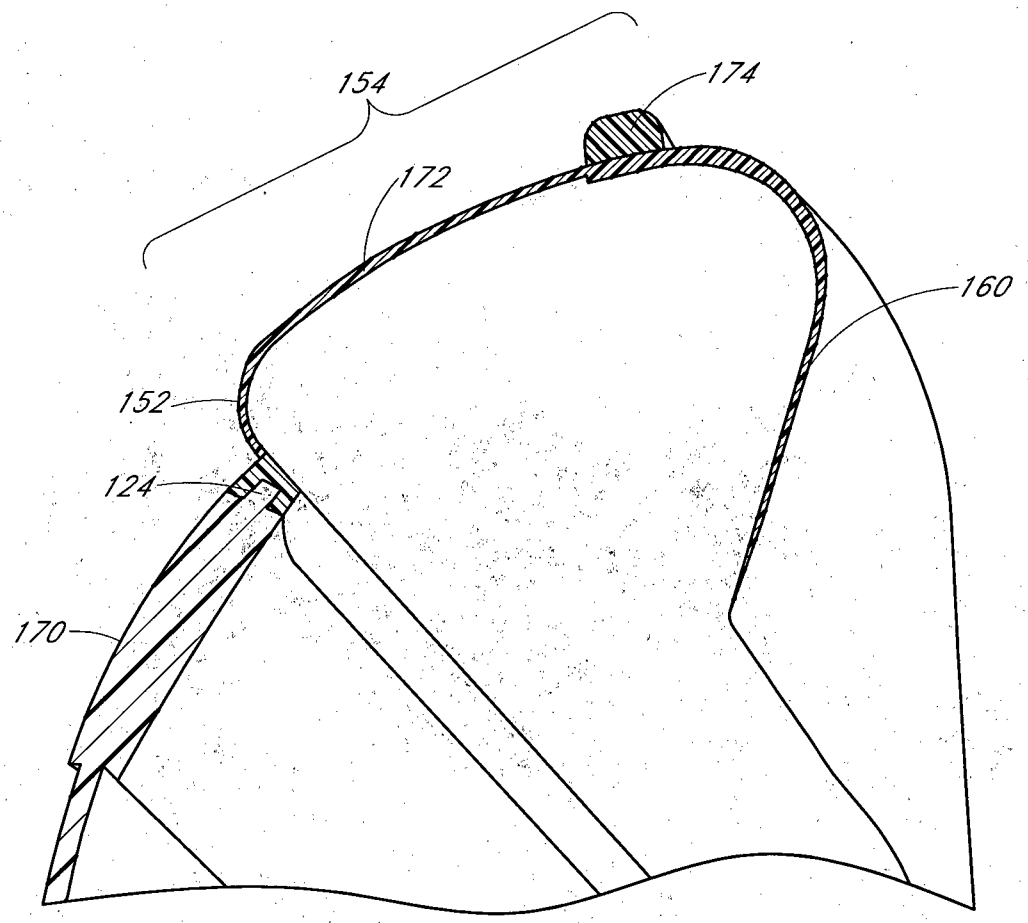

FIG. 12A

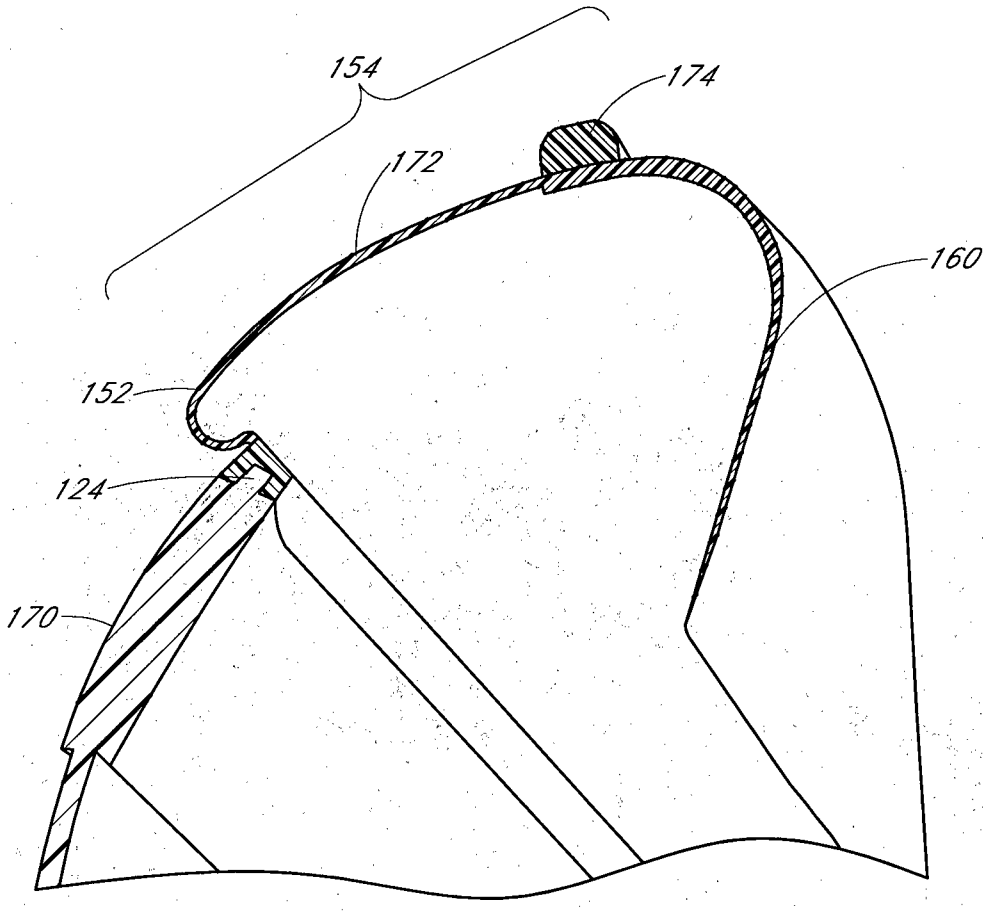

FIG. 12B

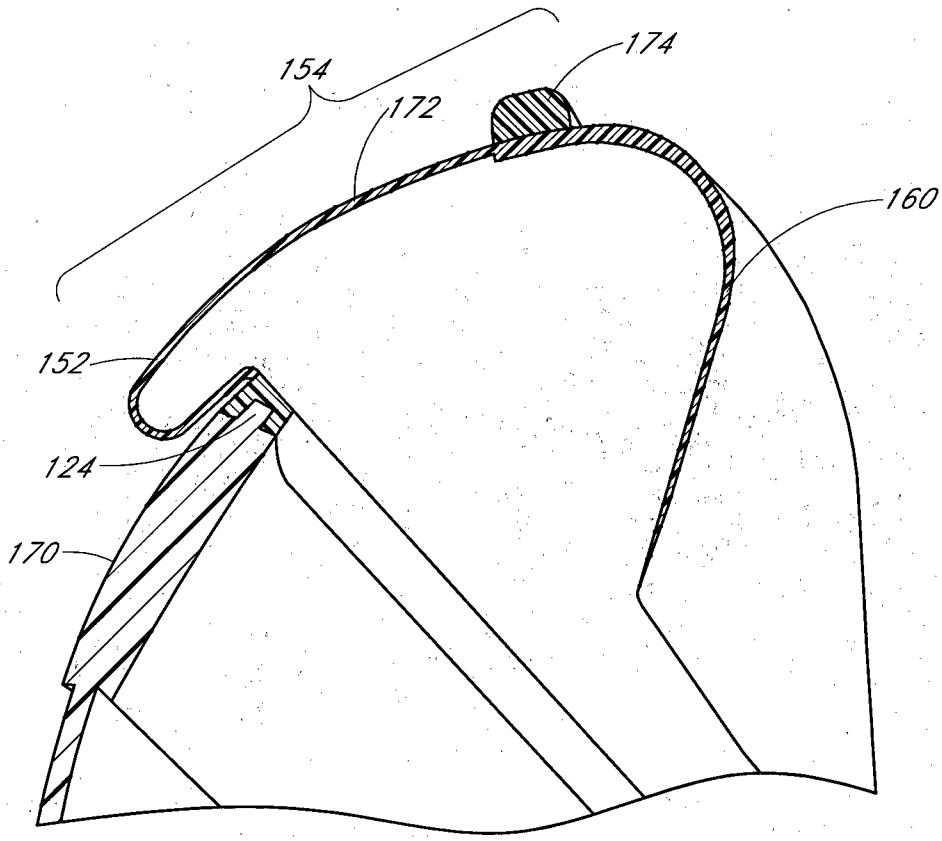

FIG. 12C

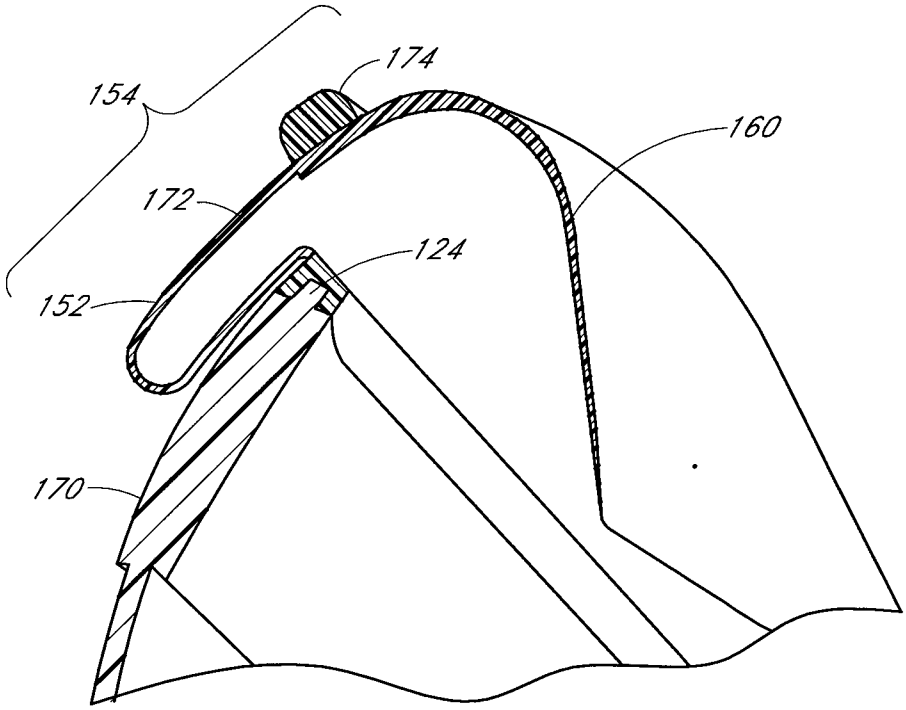

FIG. 12D

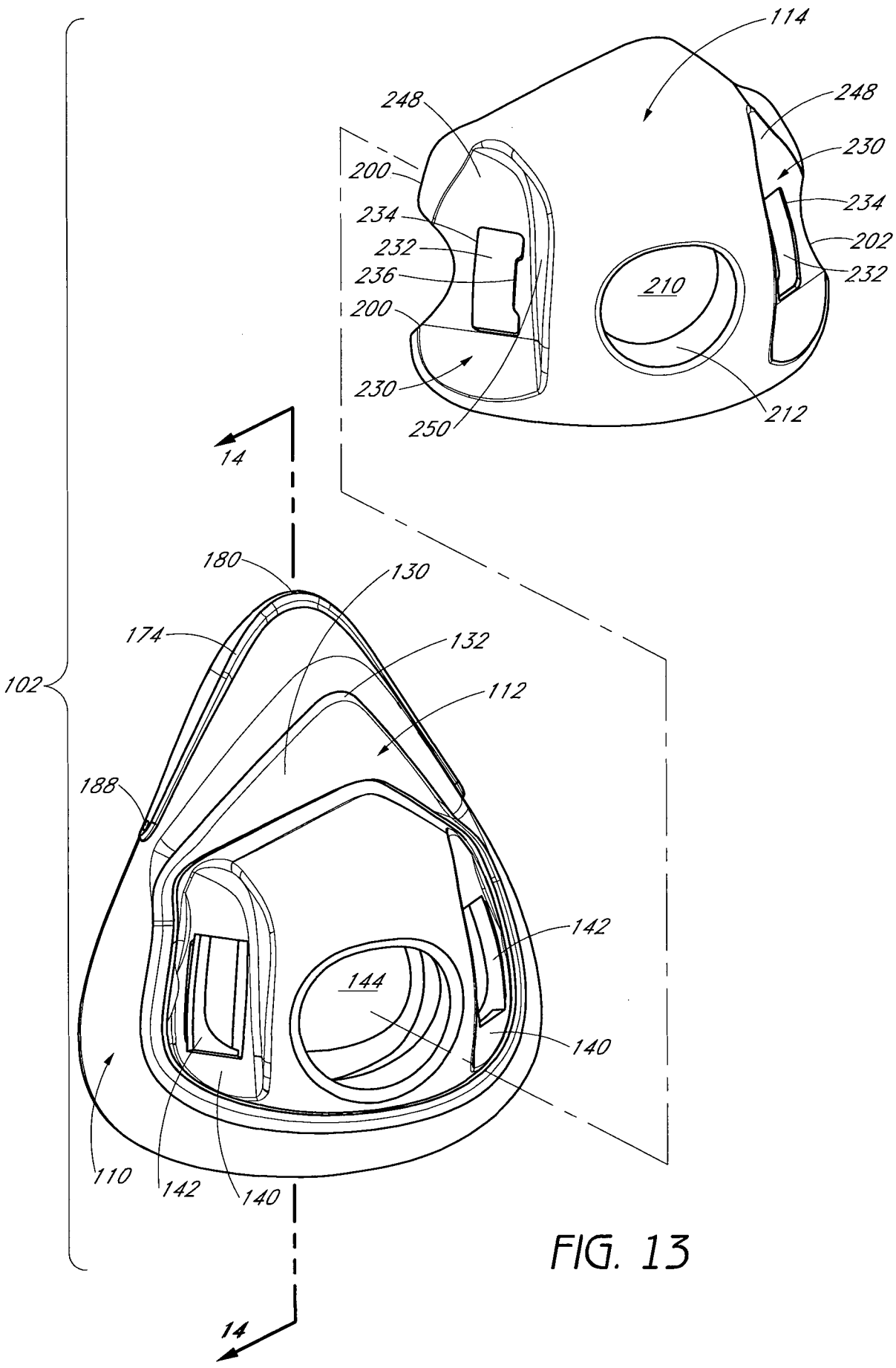
114
248
248
230
200
234
234
232
202
236
232
210
200
230
212
250
14
180
130
174
132
102
112
188
142
144
140
110
142
140
14

FIG. 13

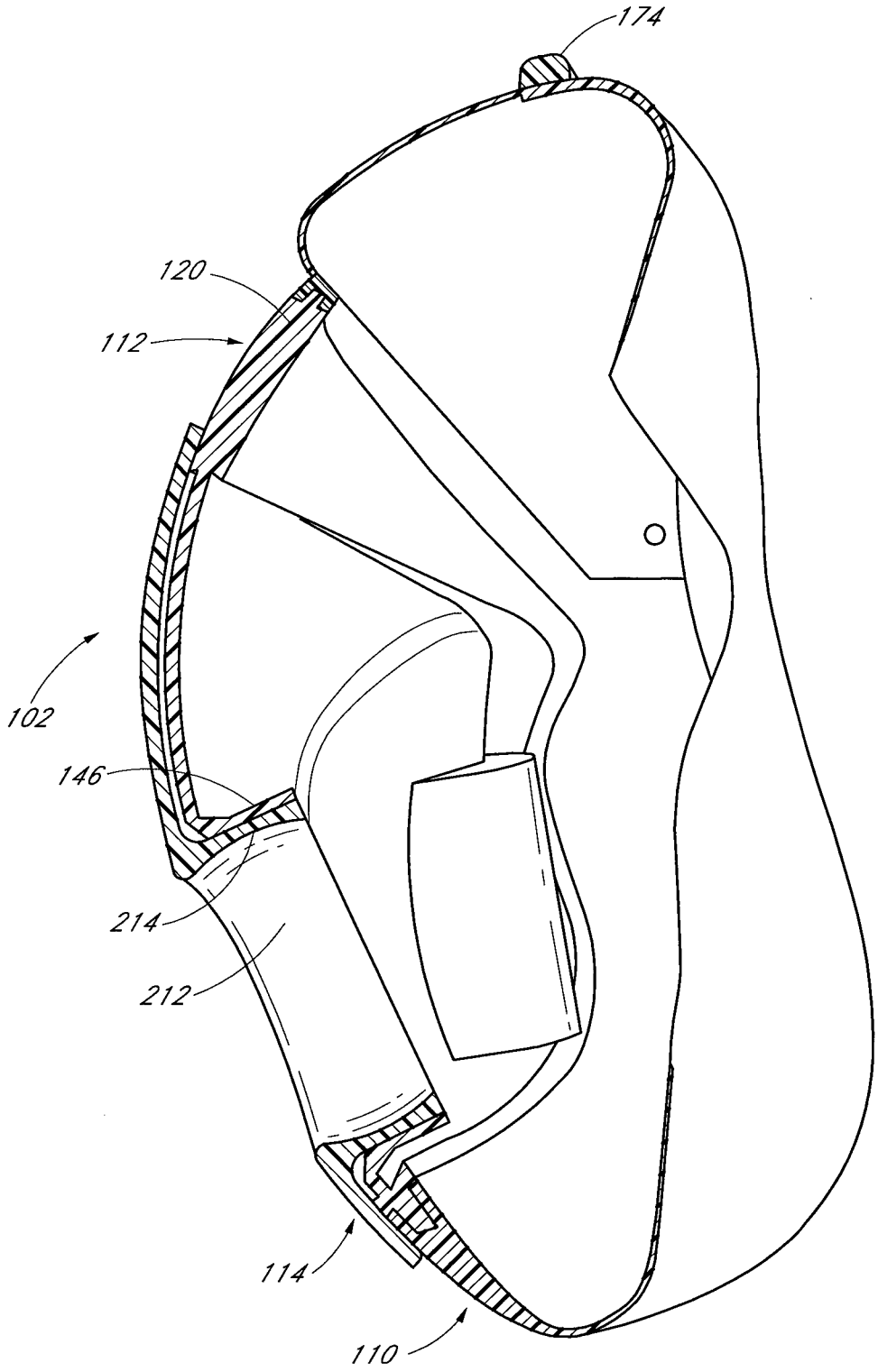

FIG. 14

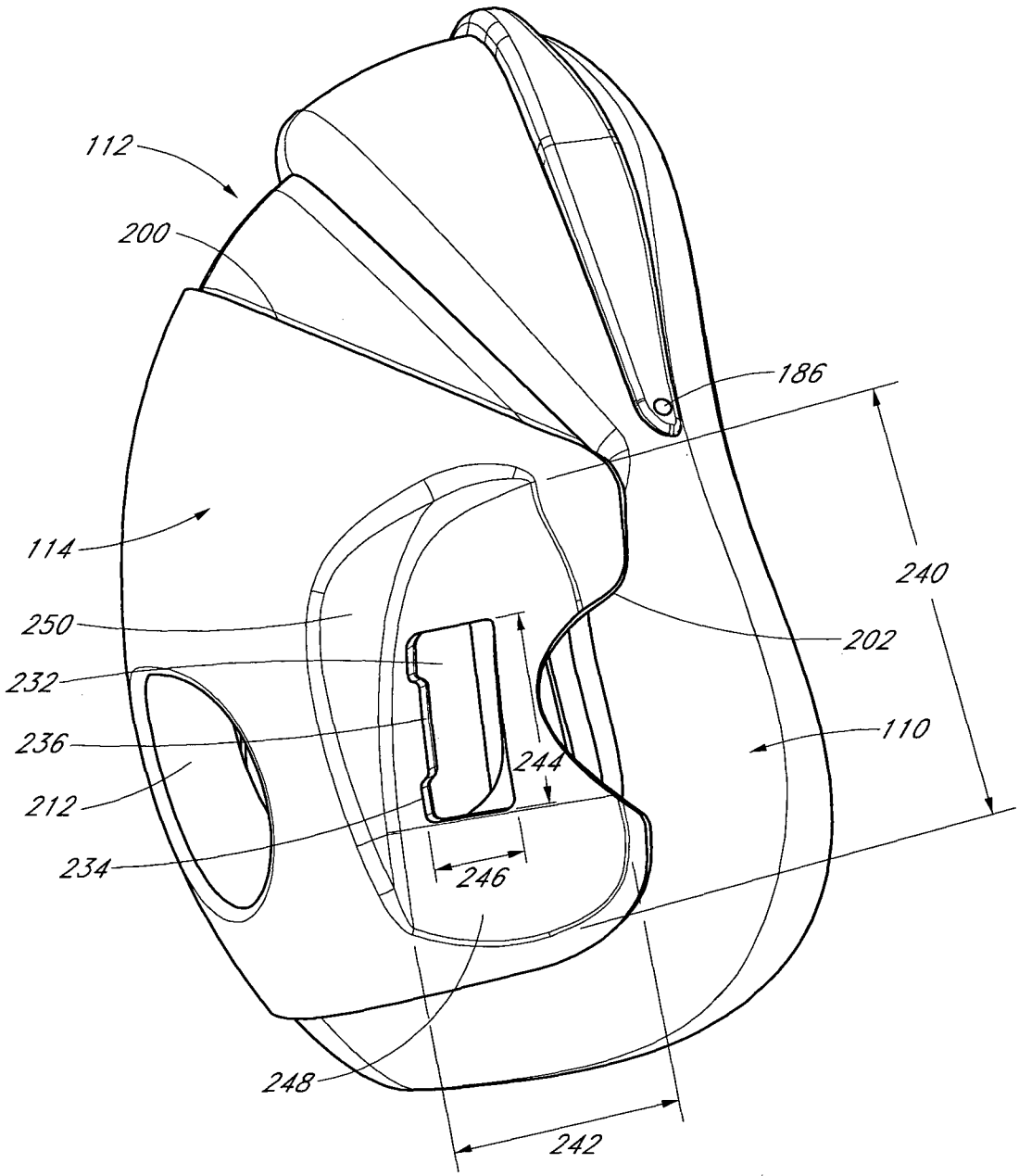

FIG. 15

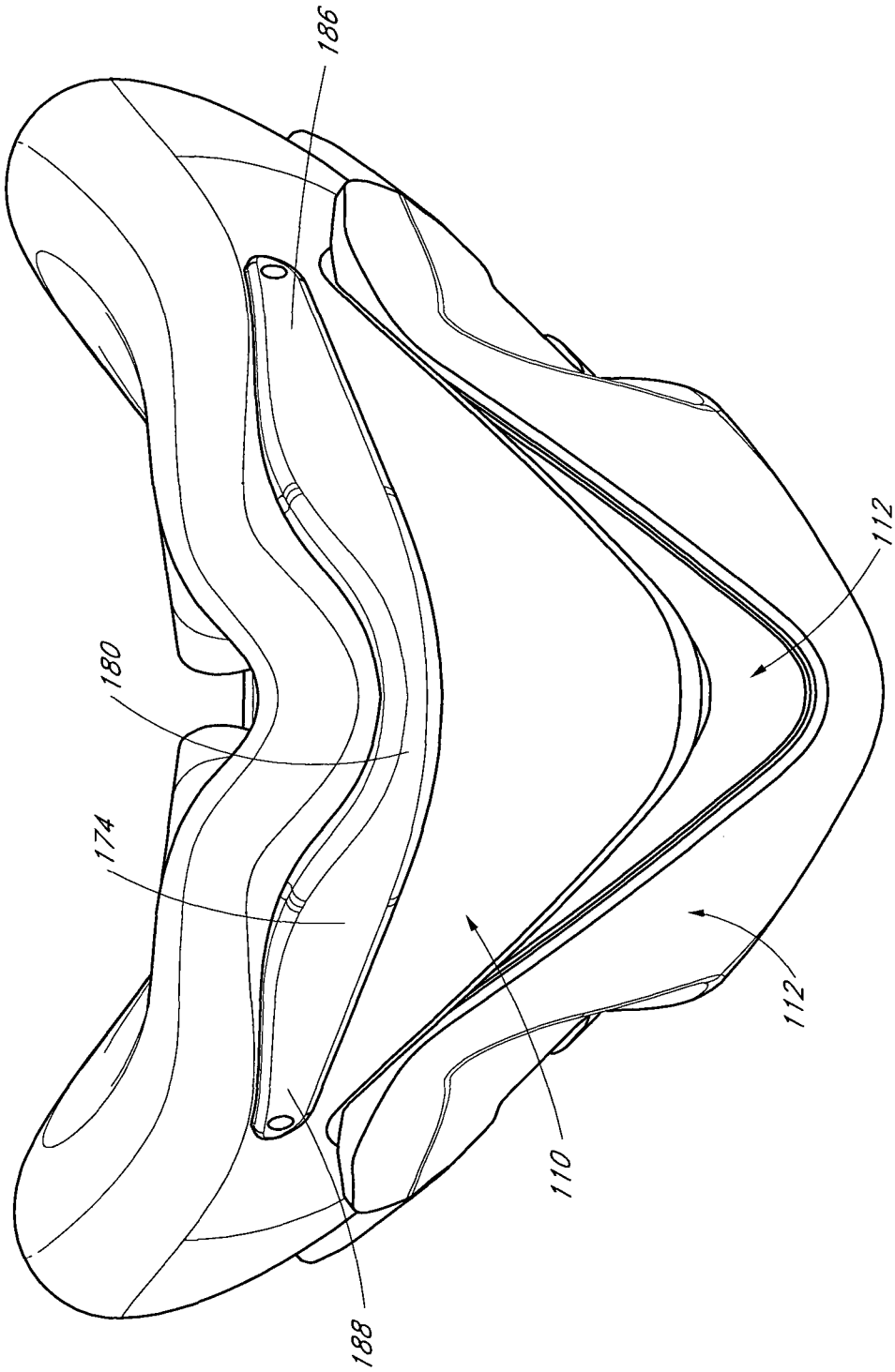

FIG. 16

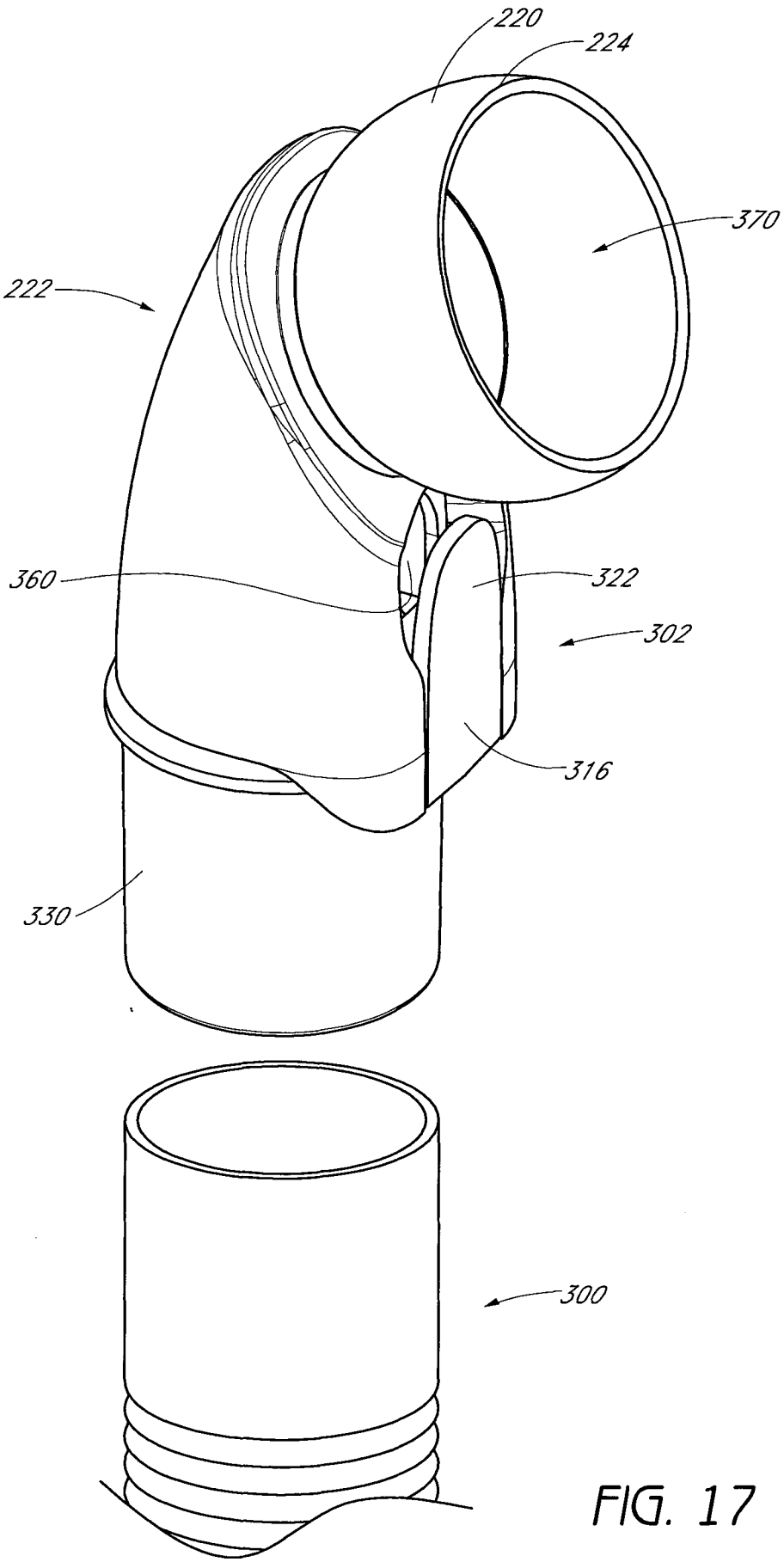

FIG. 17

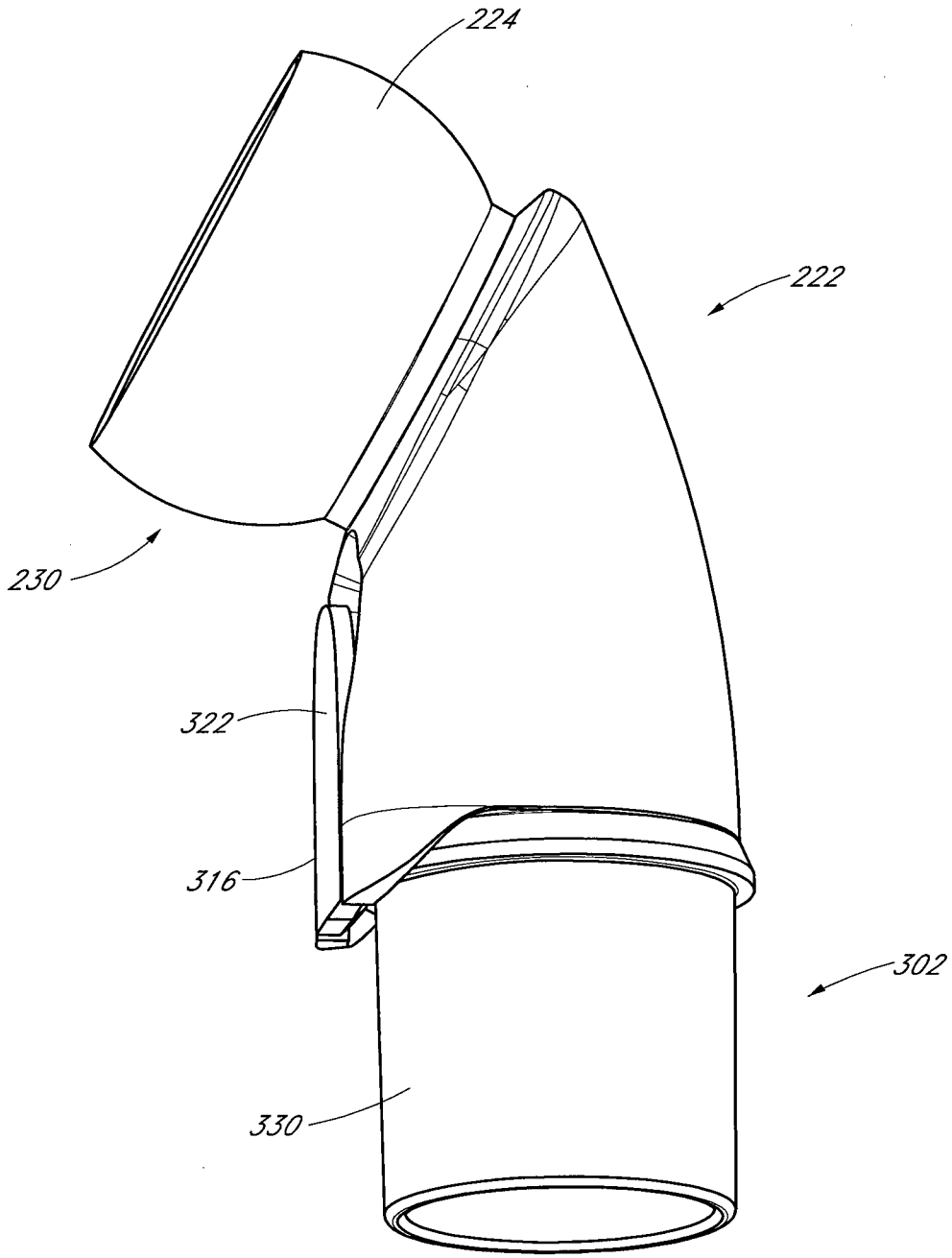

FIG. 18

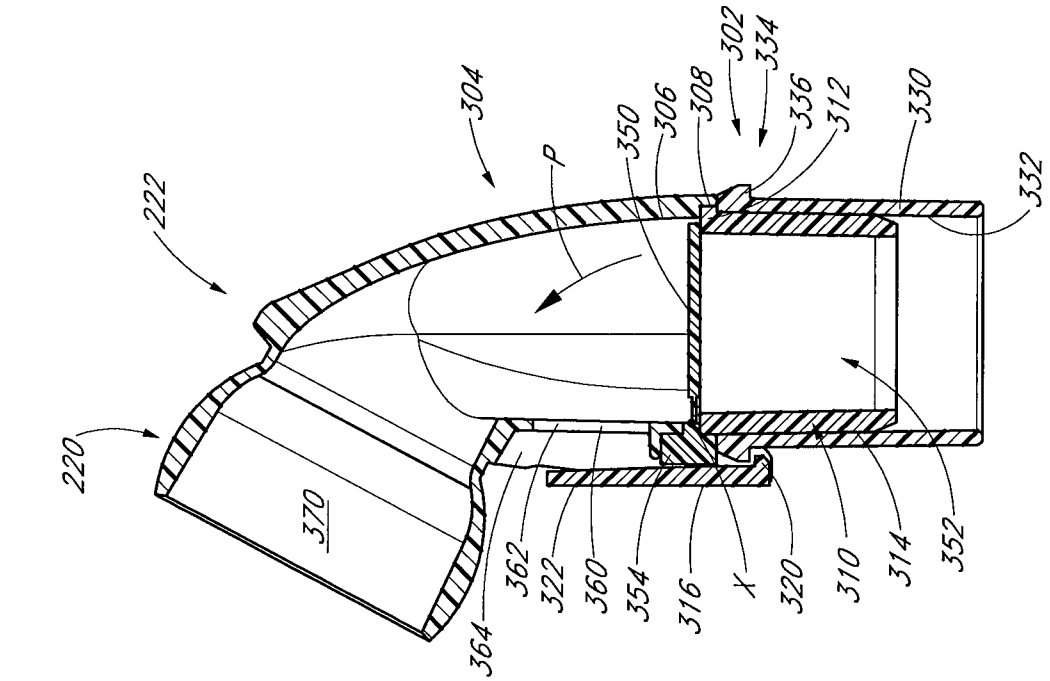
304
P
350
306
308
302
334
336
312
330
332
222
220
370
362
322
360
354
316
X
320
310
314
352
364

FIG. 20

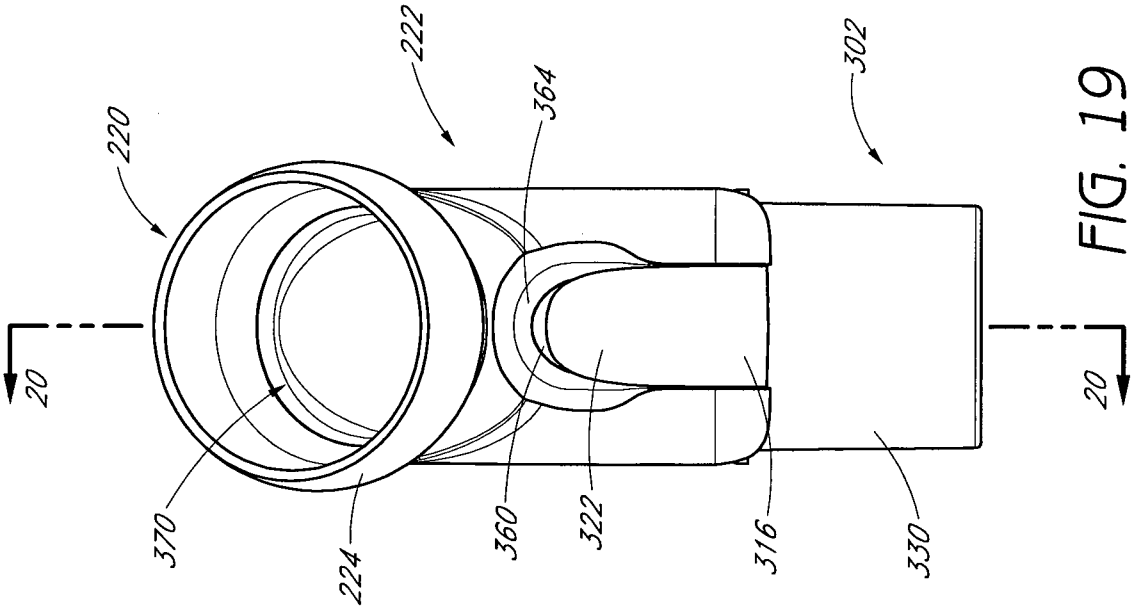
222
364
302
220
20
20
370
224
360
322
316
330

FIG. 19

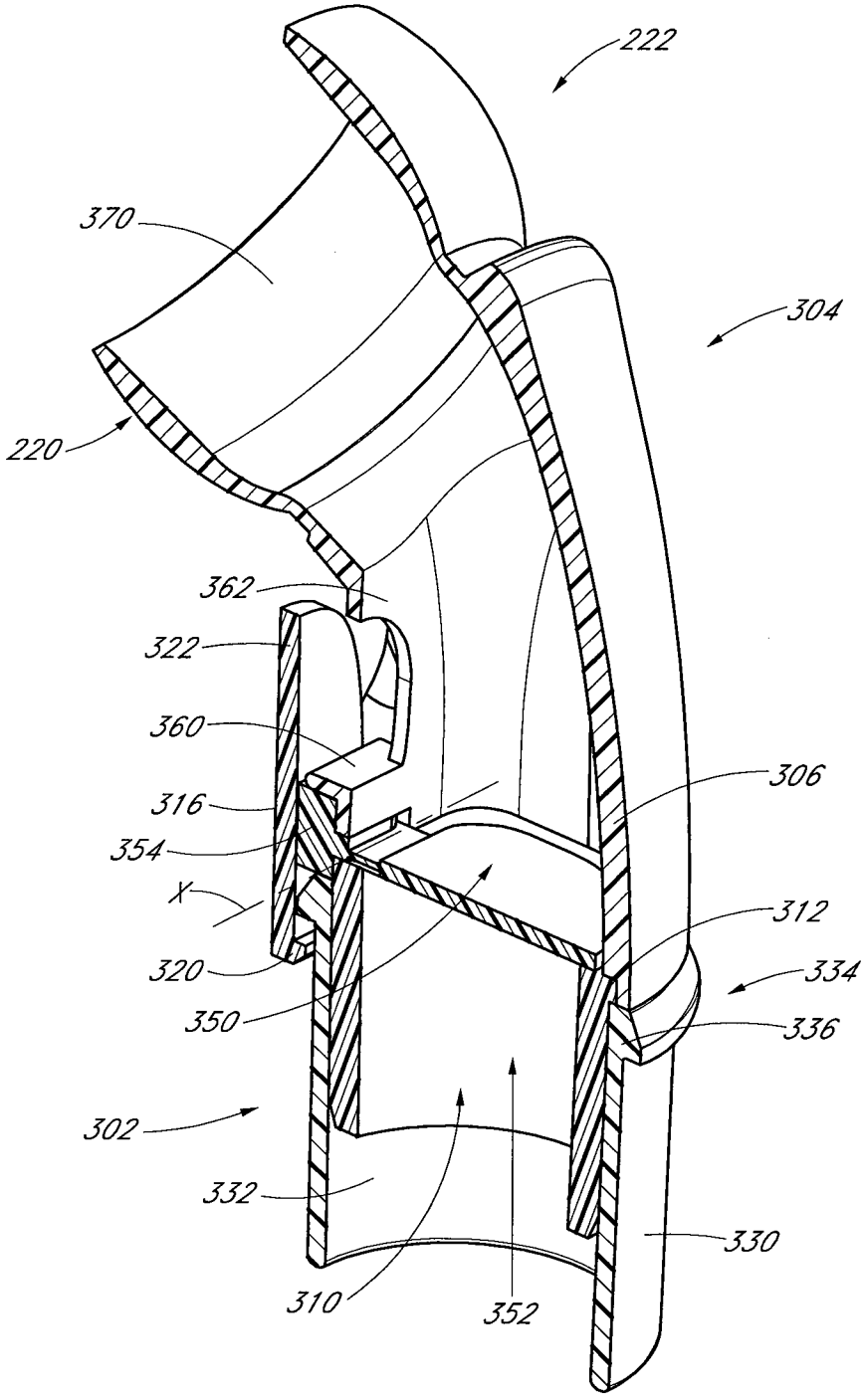
222
370
304
220
362
322
360
306
316
354
X
312
320
334
350
336
302
332
330
310
352

FIG. 21

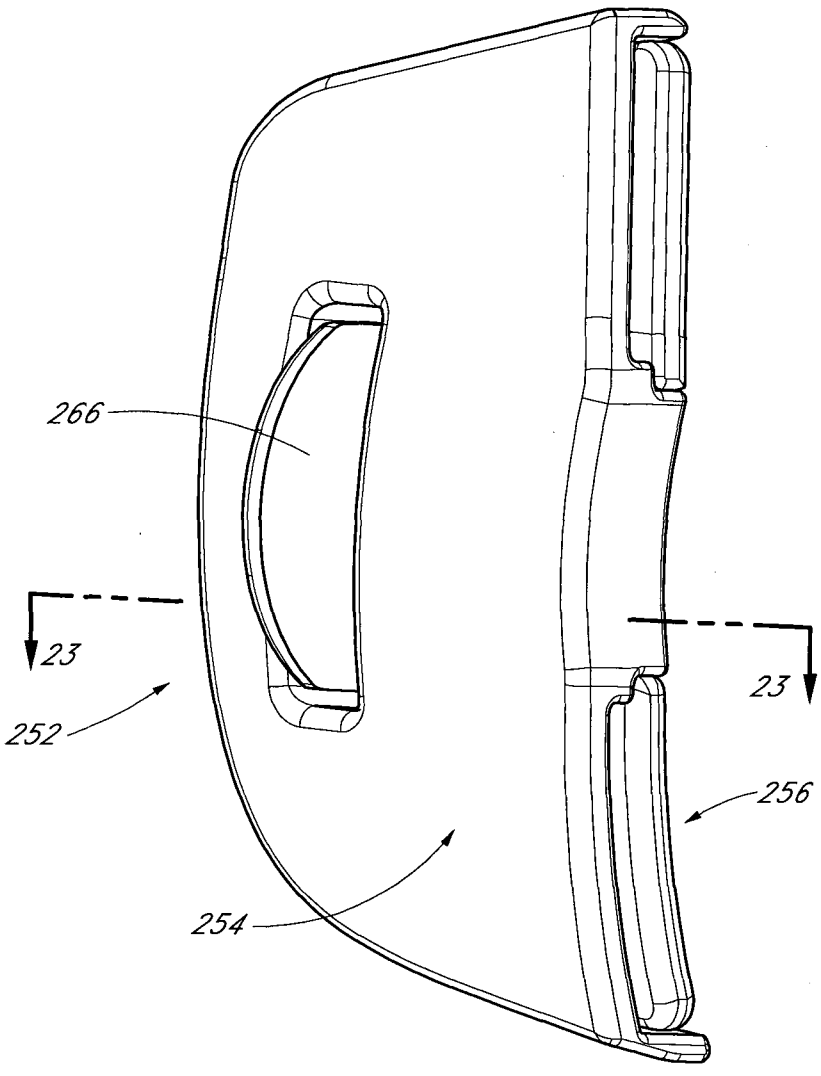

FIG. 22

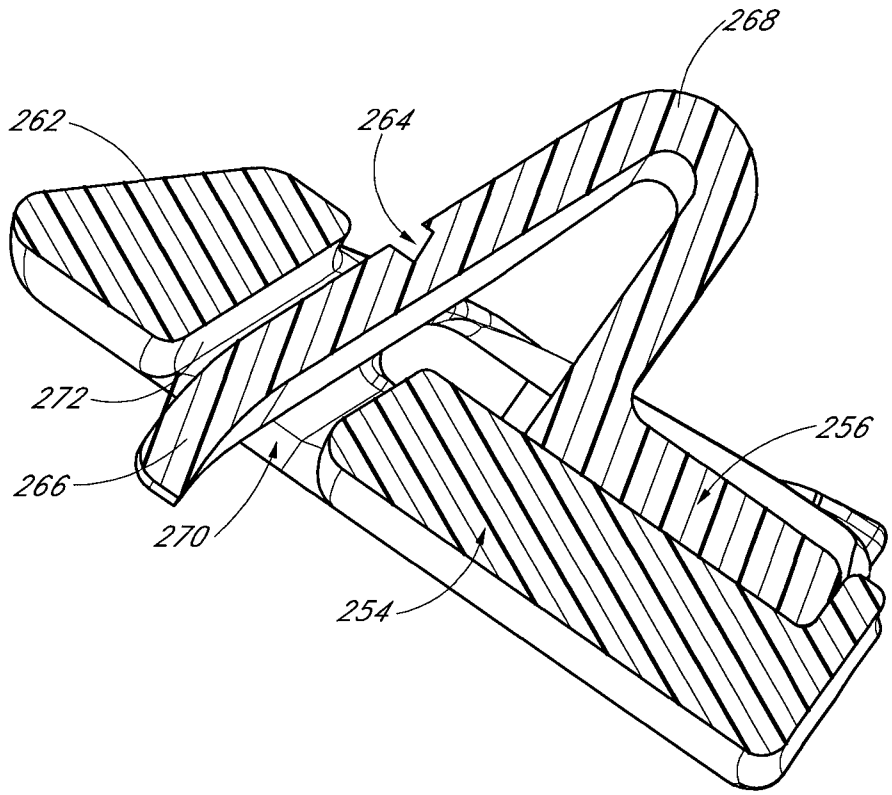

FIG. 23

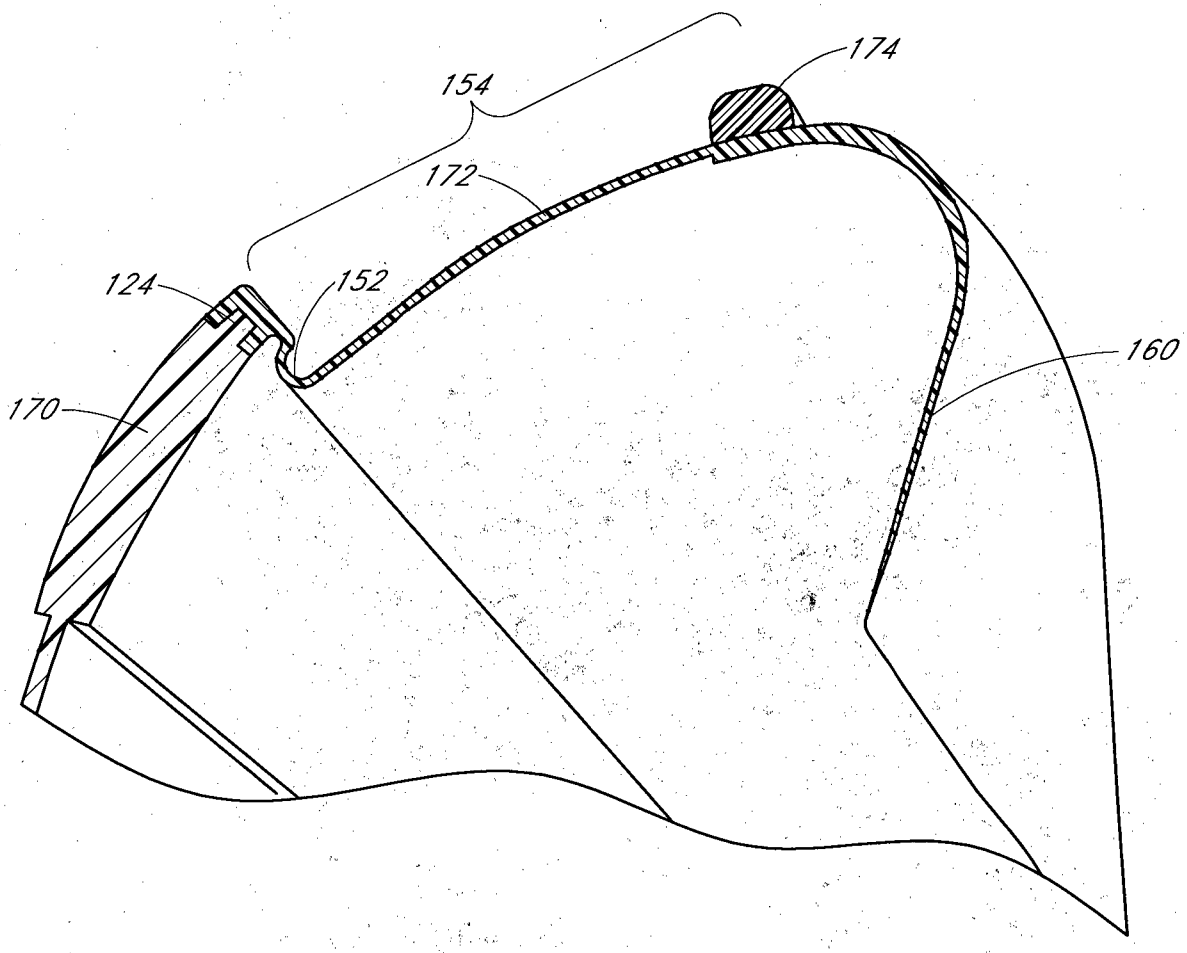

FIG. 24

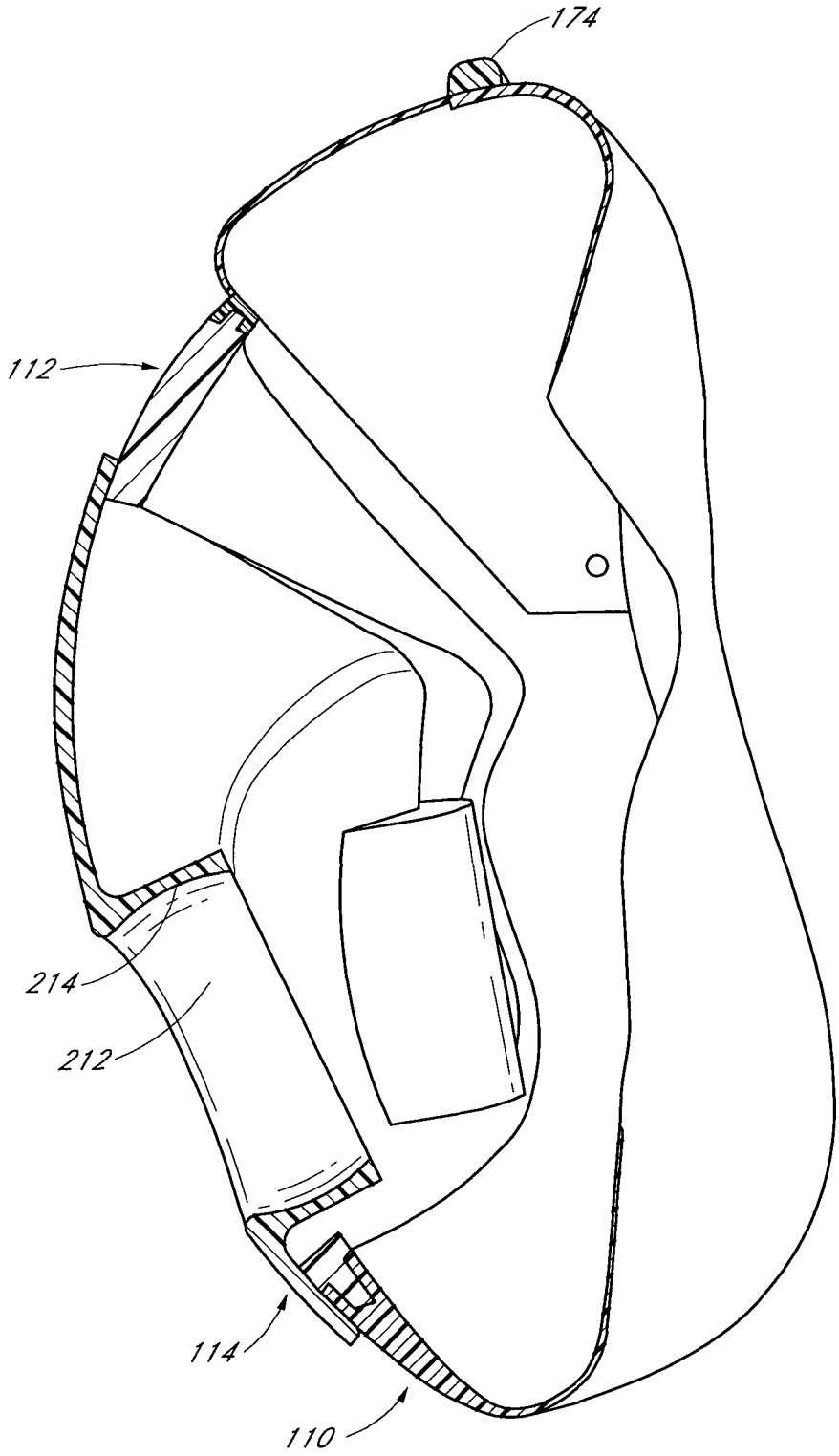

FIG. 25

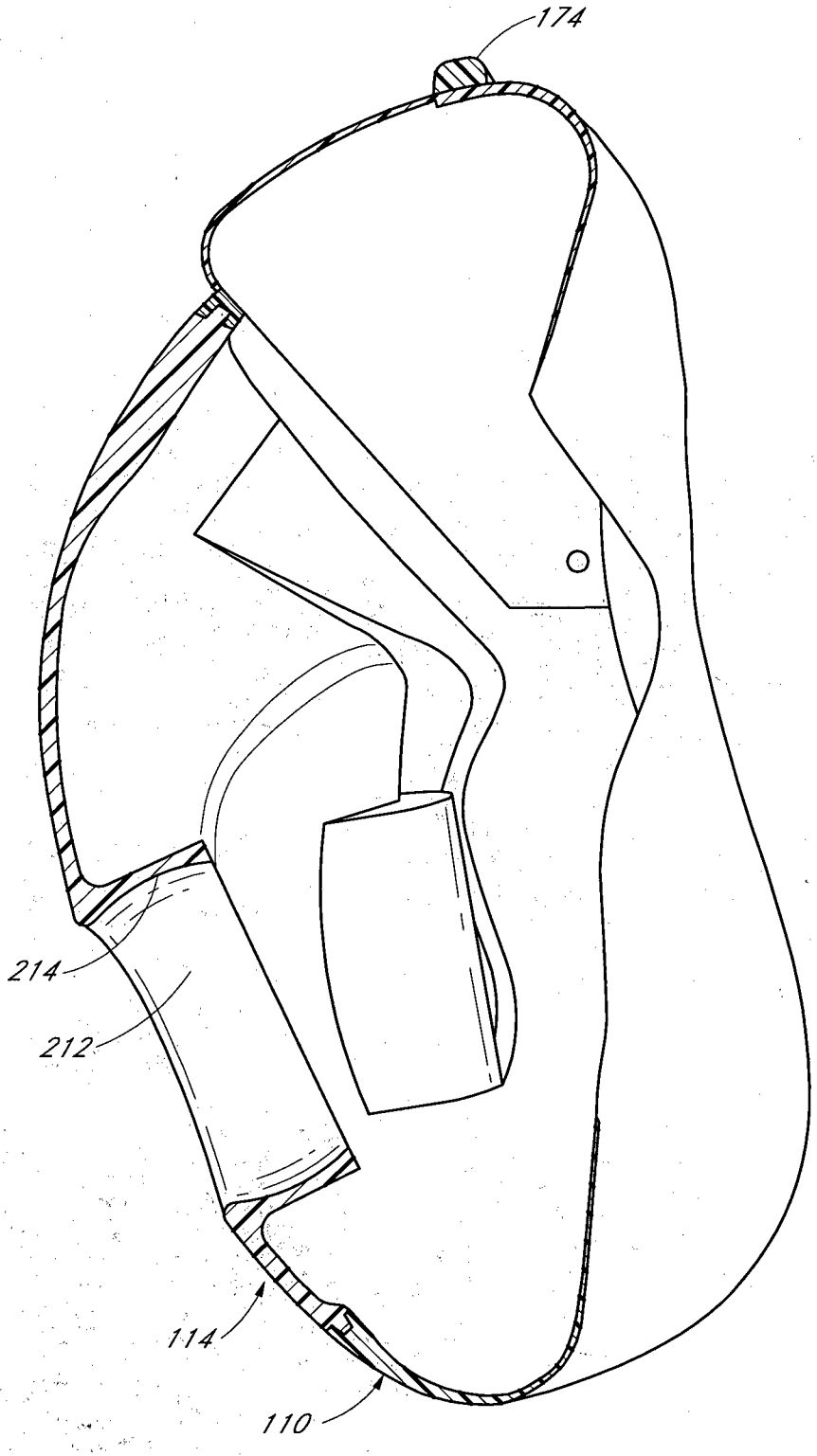

FIG. 26

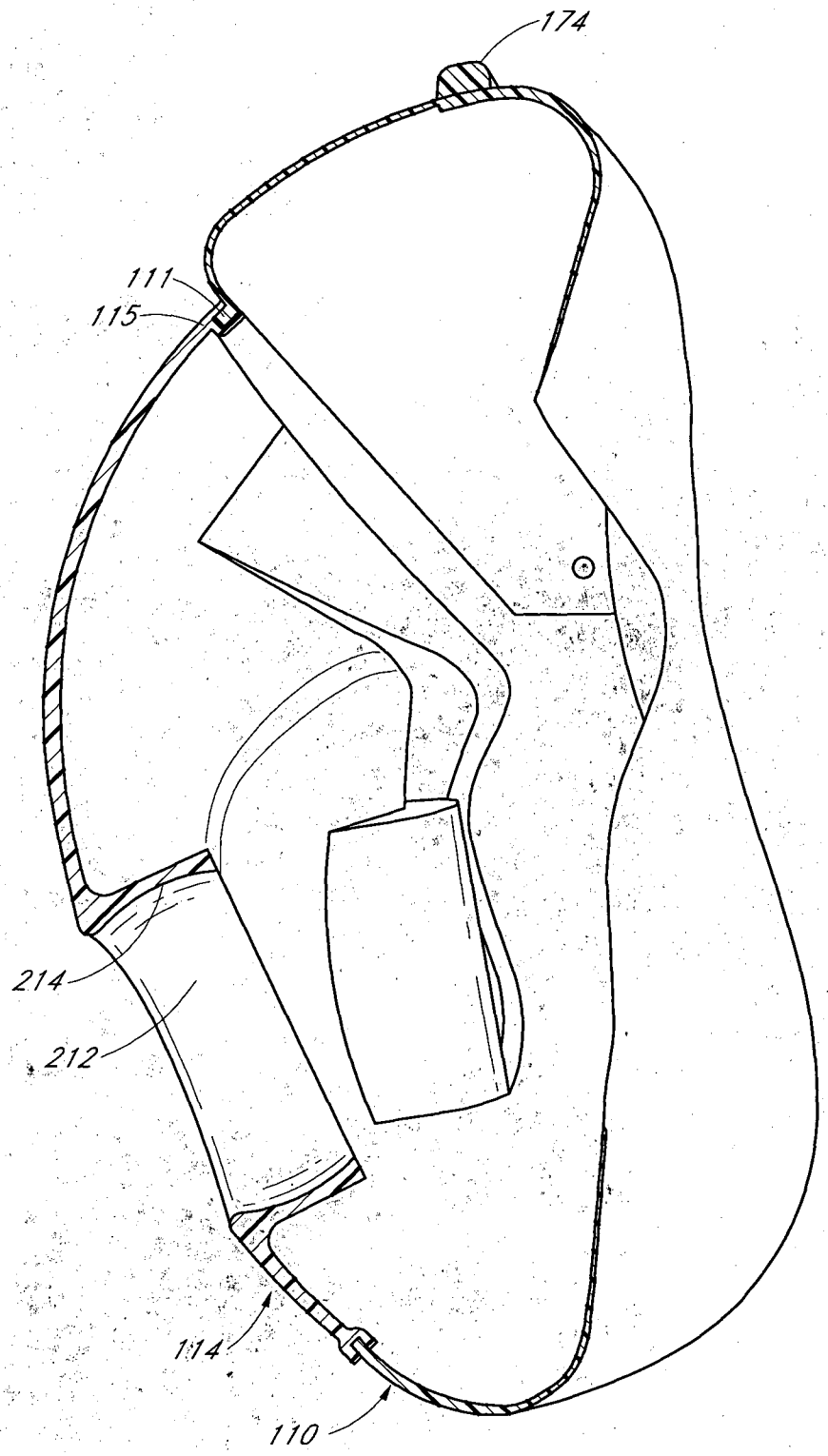

FIG. 27

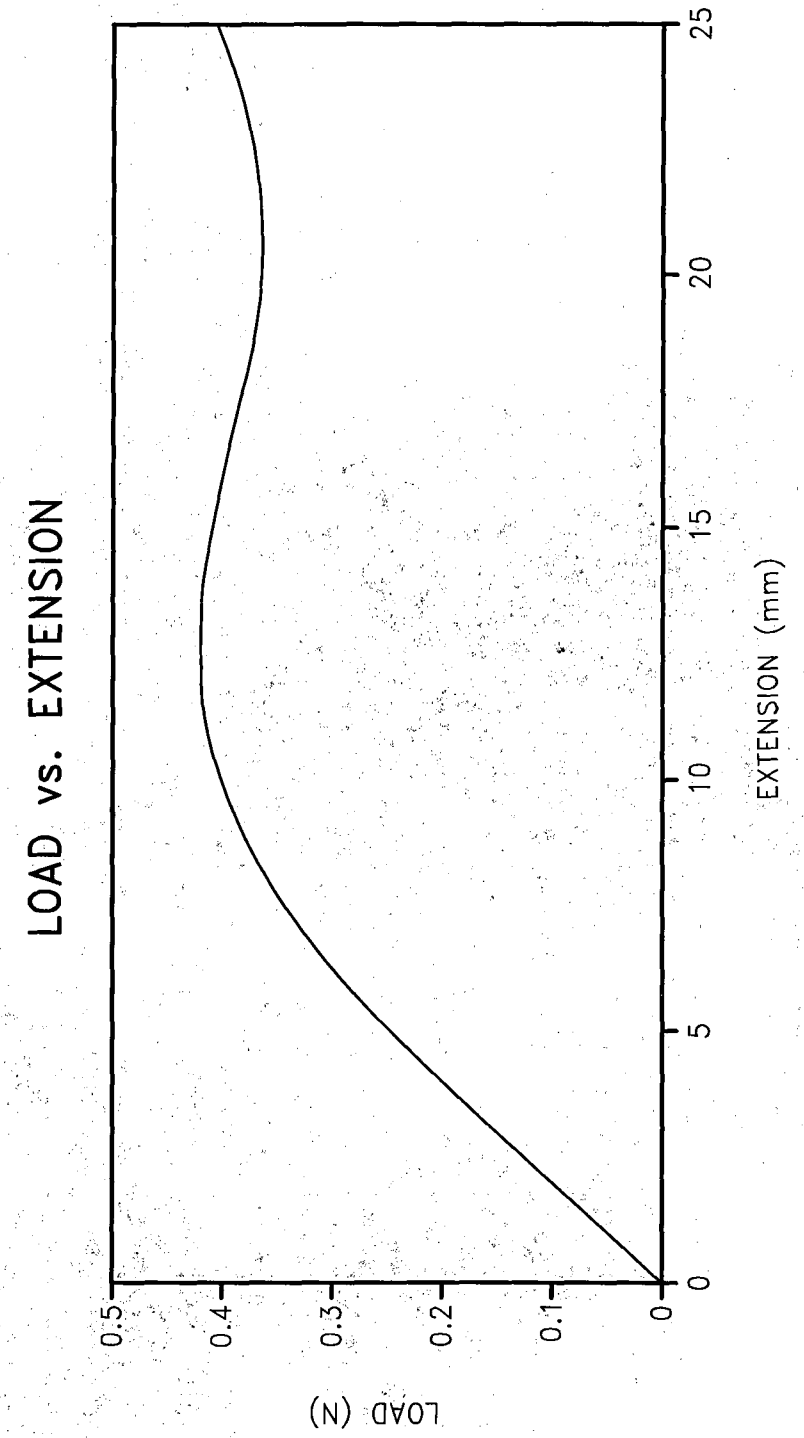
LOAD vs. EXTENSION
LOAD (N)
0.5
0.4
0.3
0.2
0.1
0
0
5
10
15
20
25
EXTENSION (mm)

FIG. 28

FIG. 29

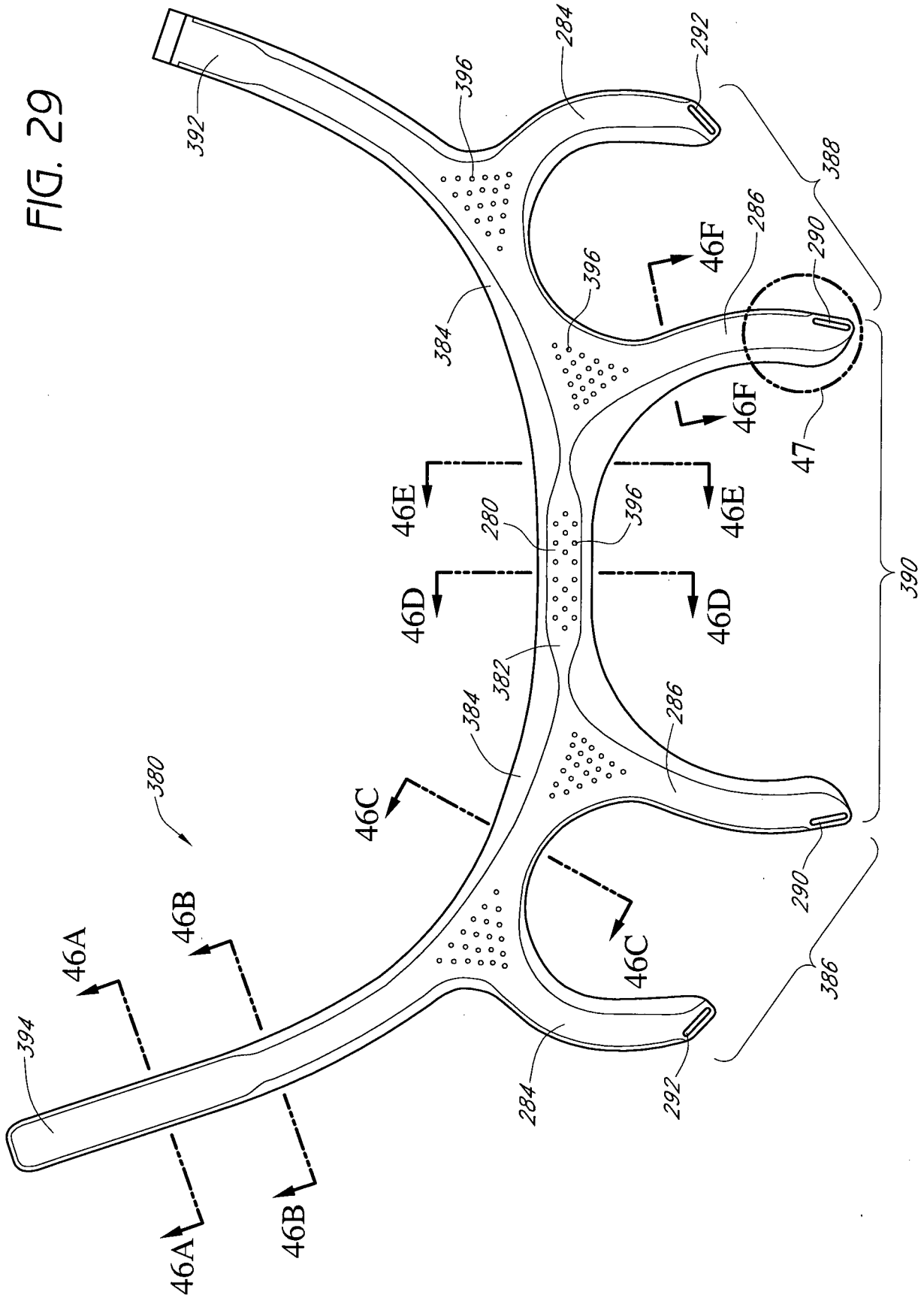
392
396
284
292
388
286
290
46F
396
384
46F
47
46E
280
396
46E
46D
46D
390
382
384
286
380
46C
290
46B
46A
46C
386
394
284
292
46A
46B

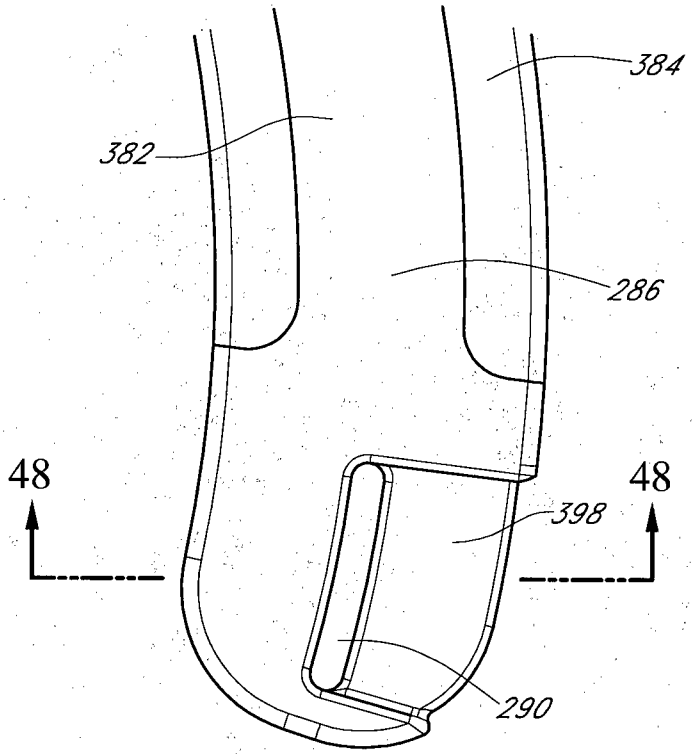

FIG. 30

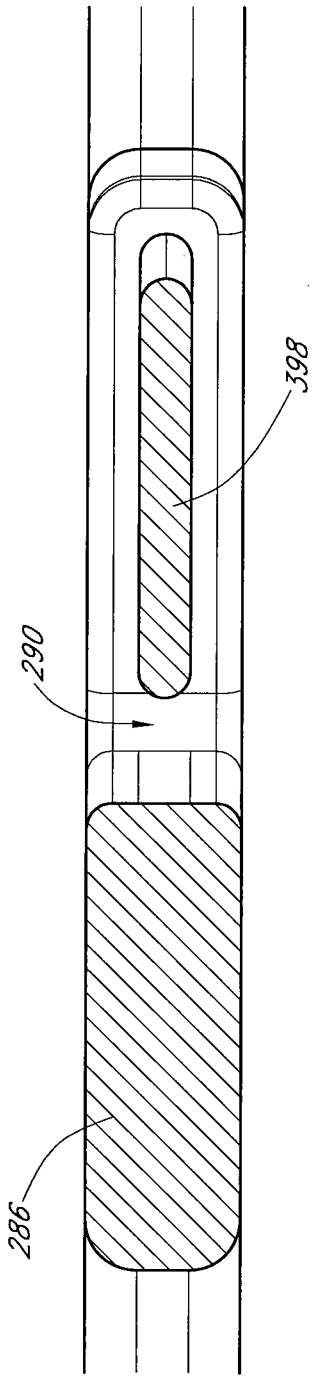

FIG. 31

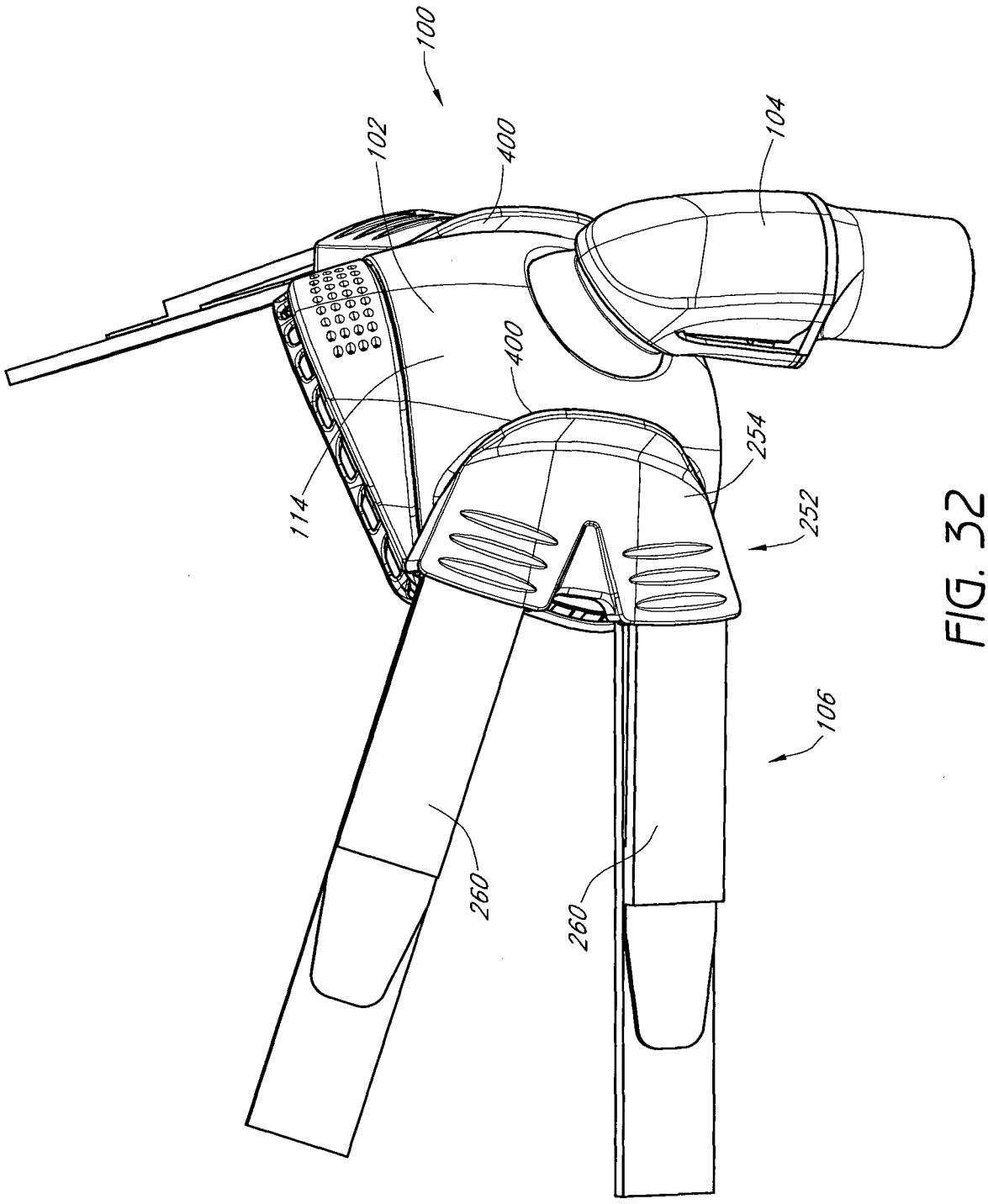

FIG. 32

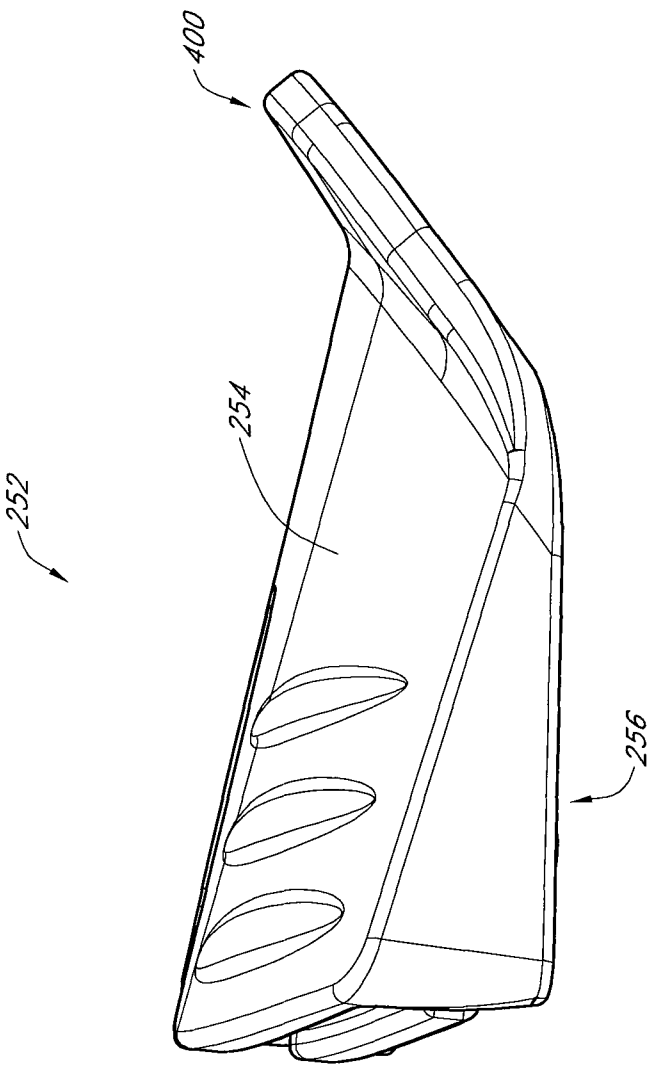

FIG. 33

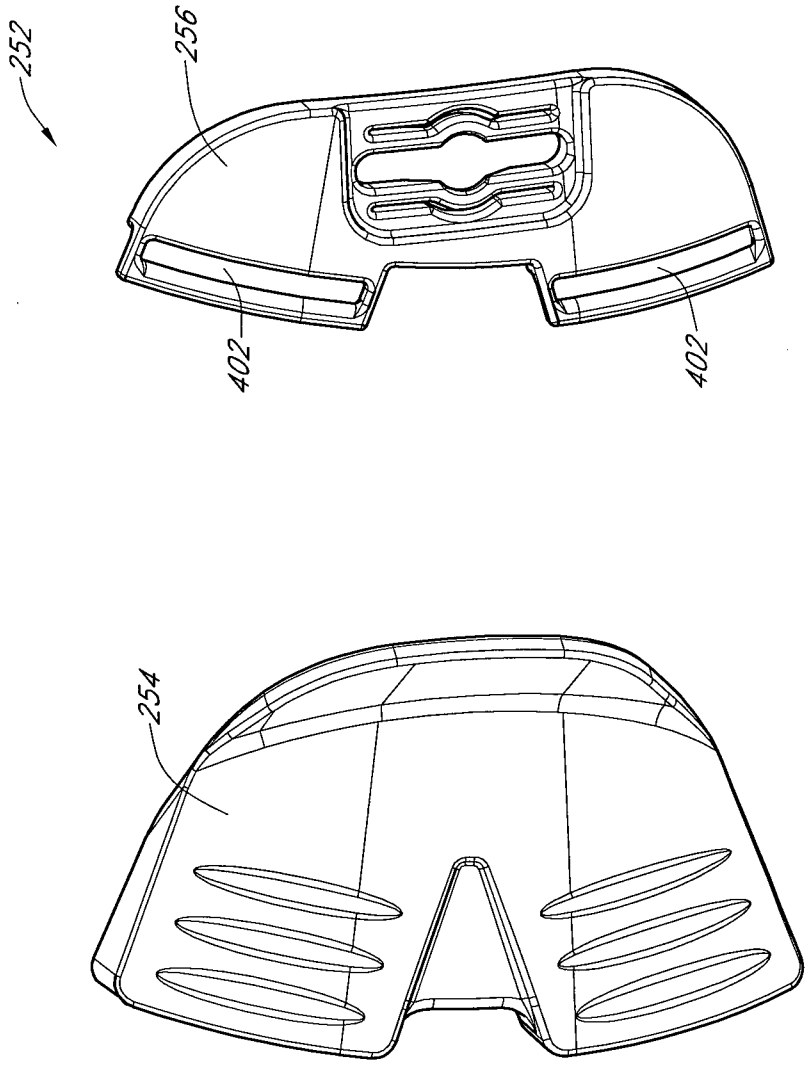

FIG. 34

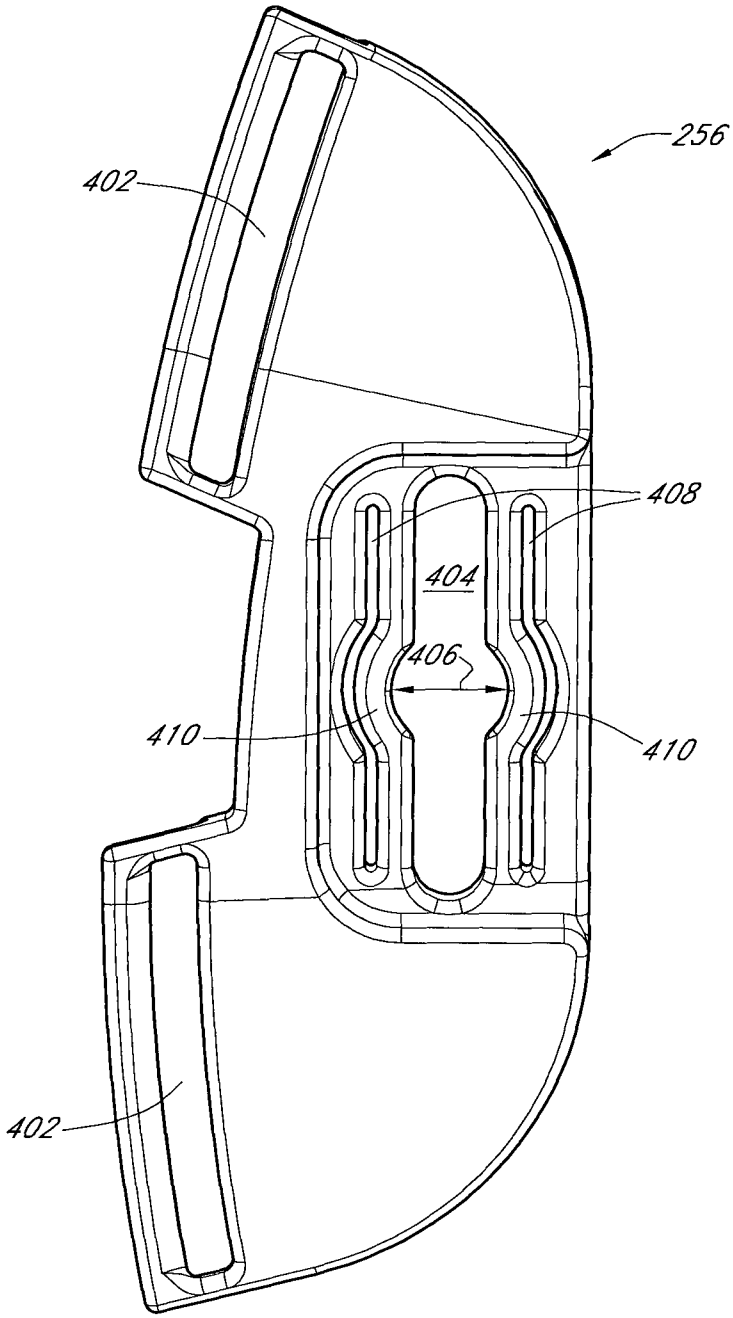

FIG. 35

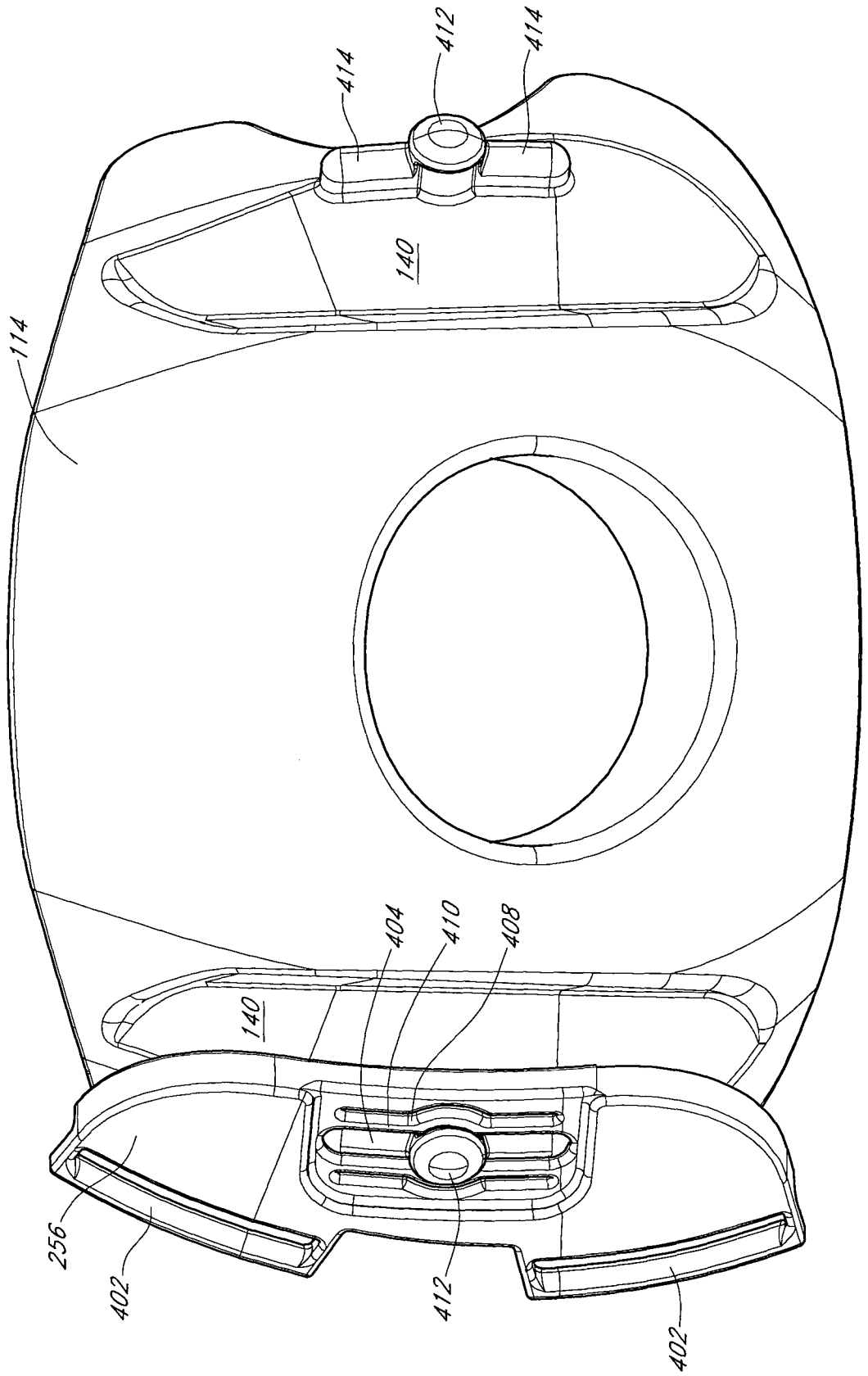

FIG. 36

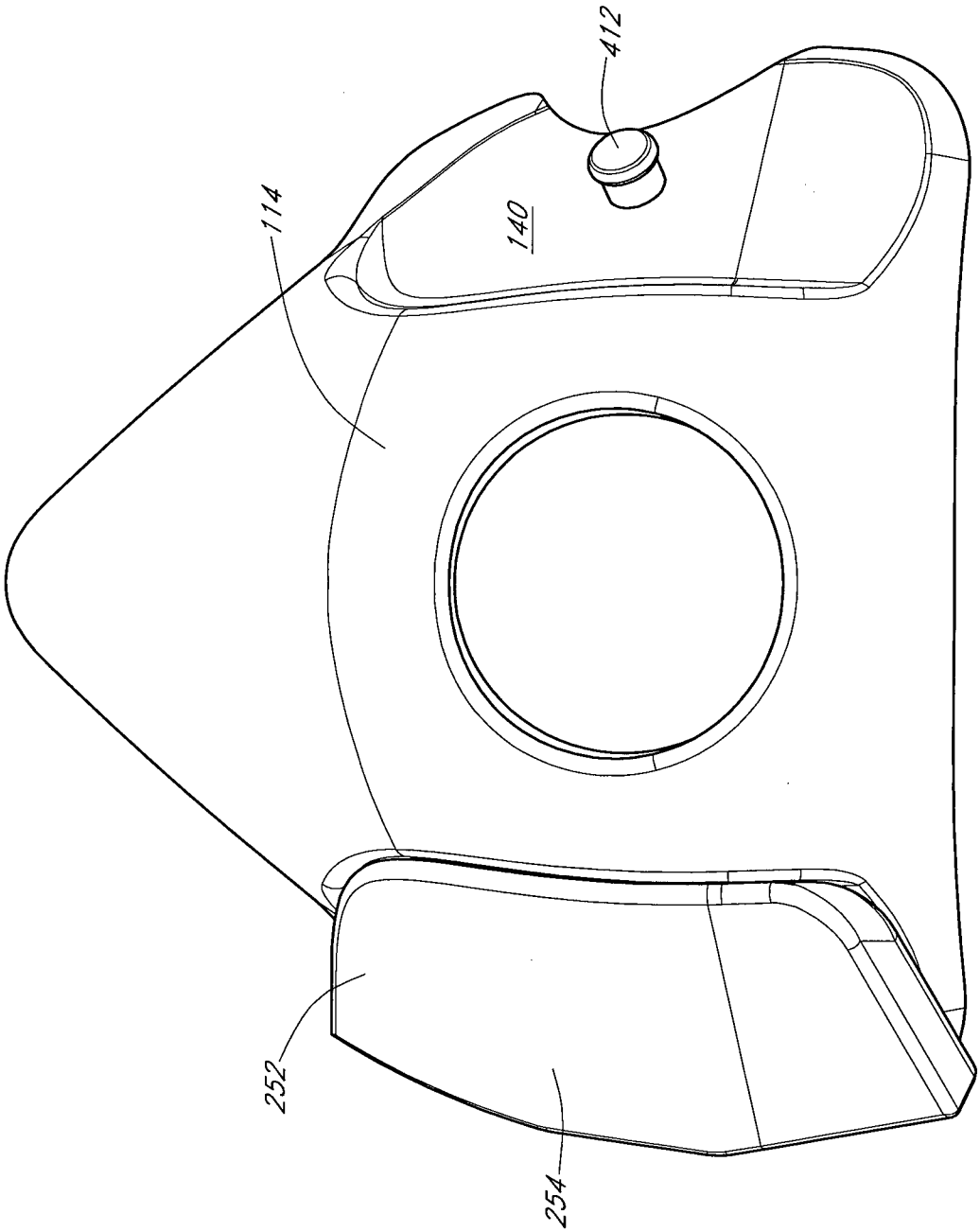

FIG. 37

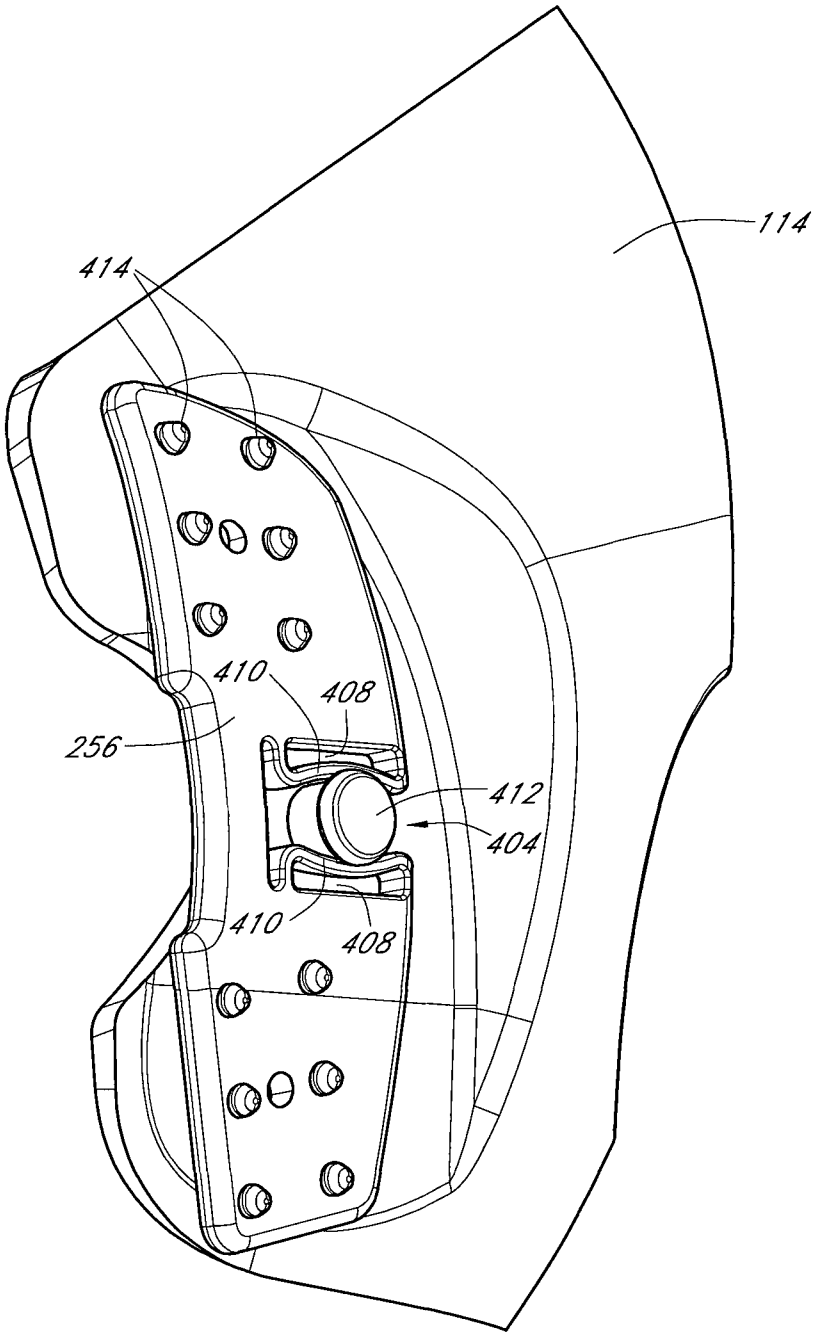

FIG. 38

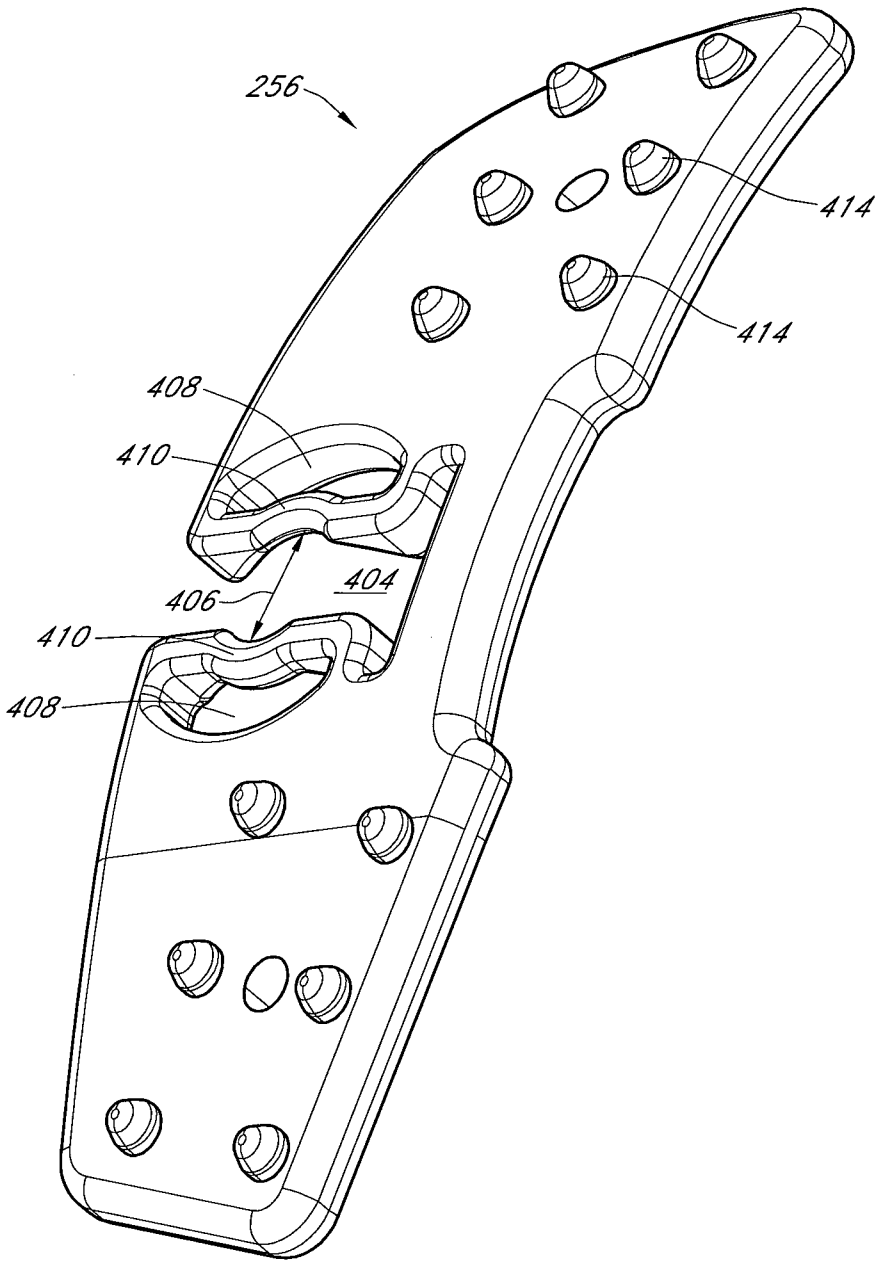

FIG. 39

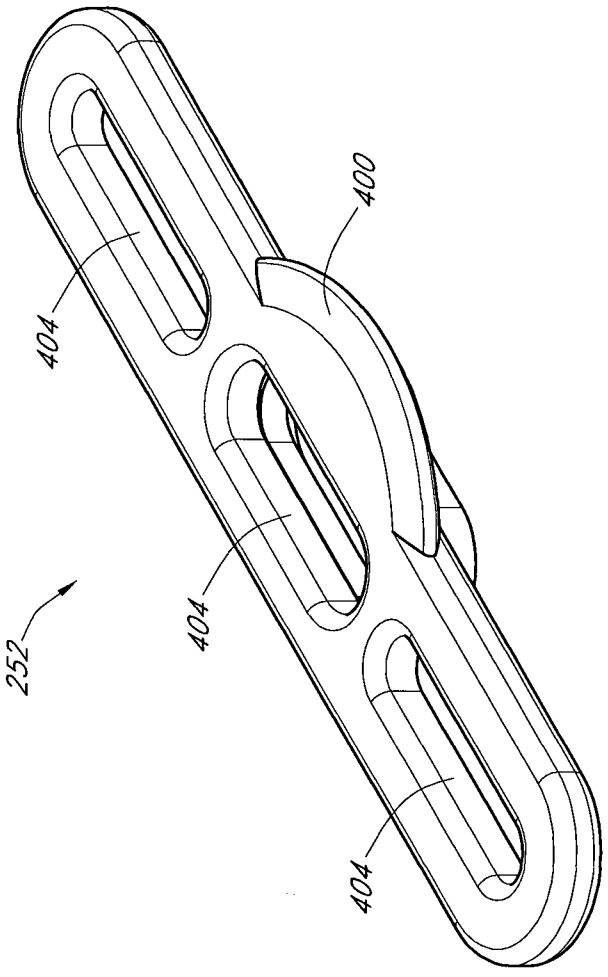

FIG. 40

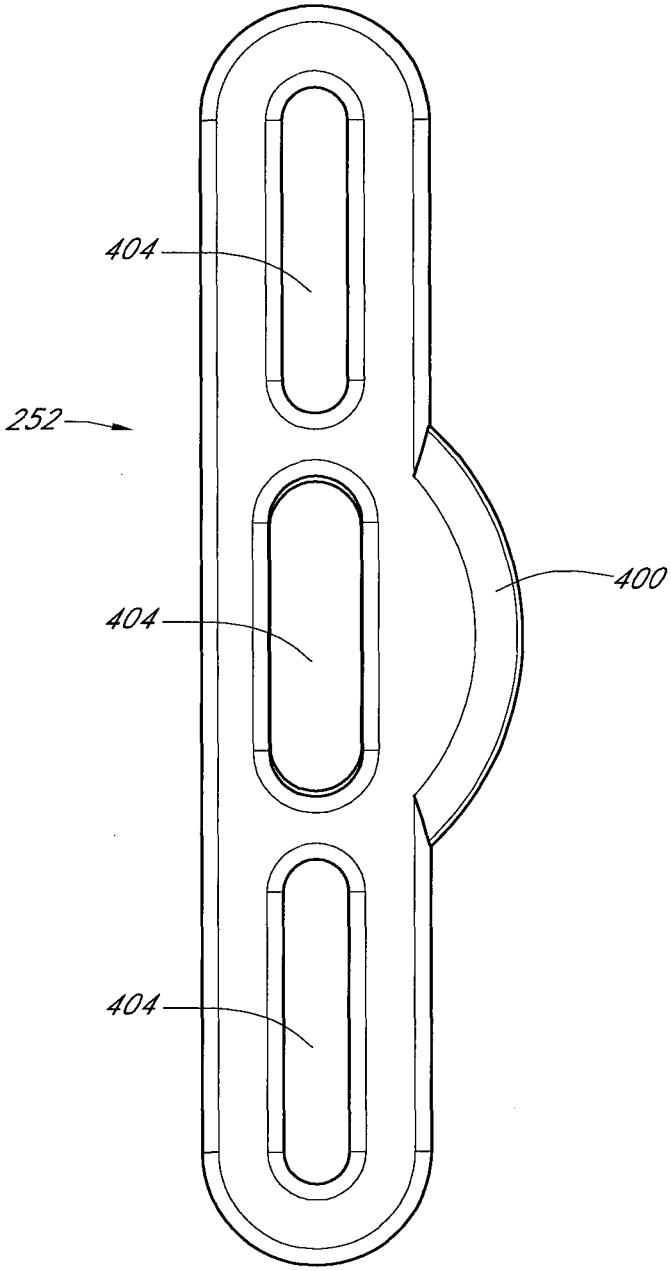

FIG. 41

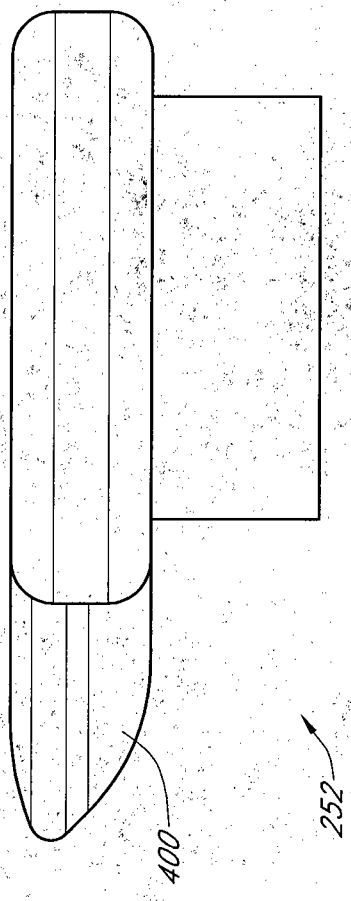

FIG. 42

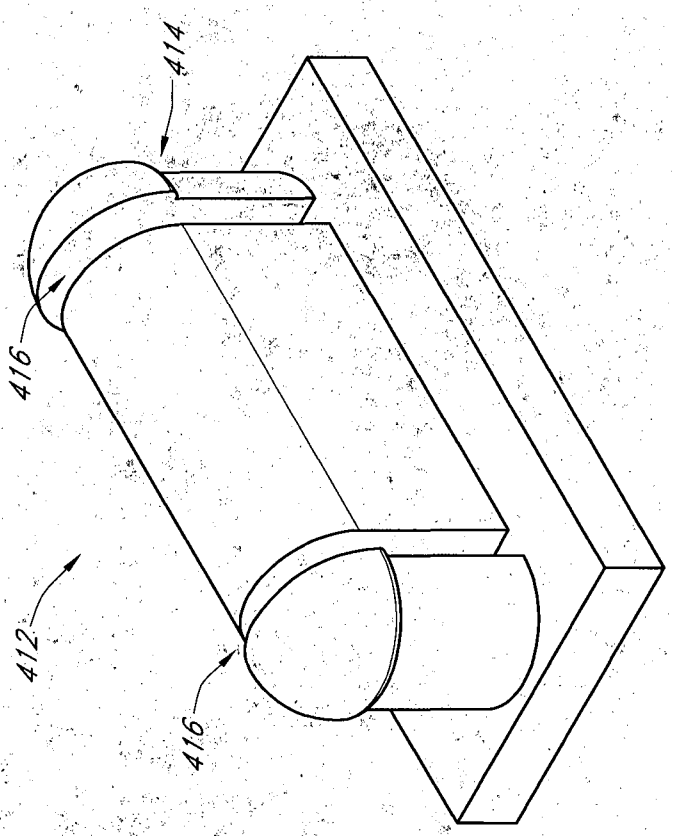

FIG. 43

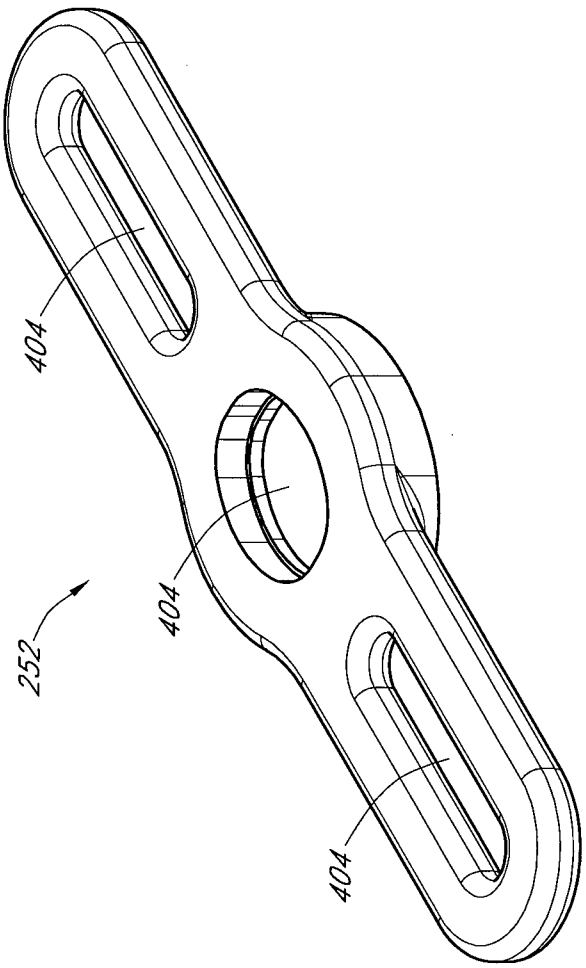

FIG. 44

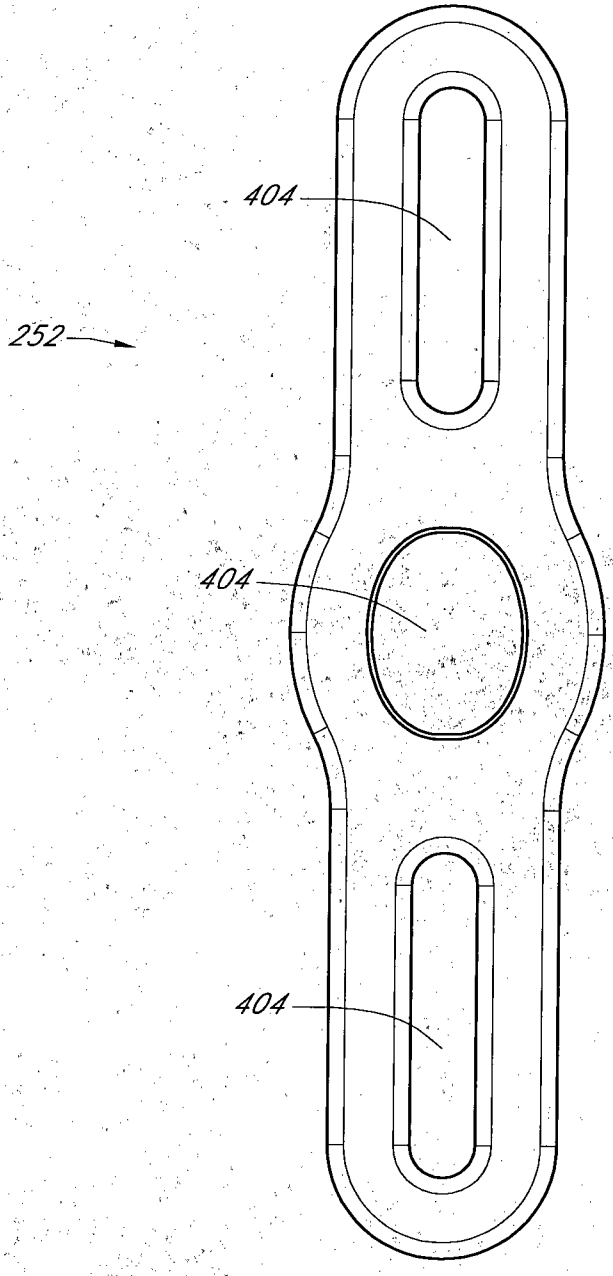

FIG. 45

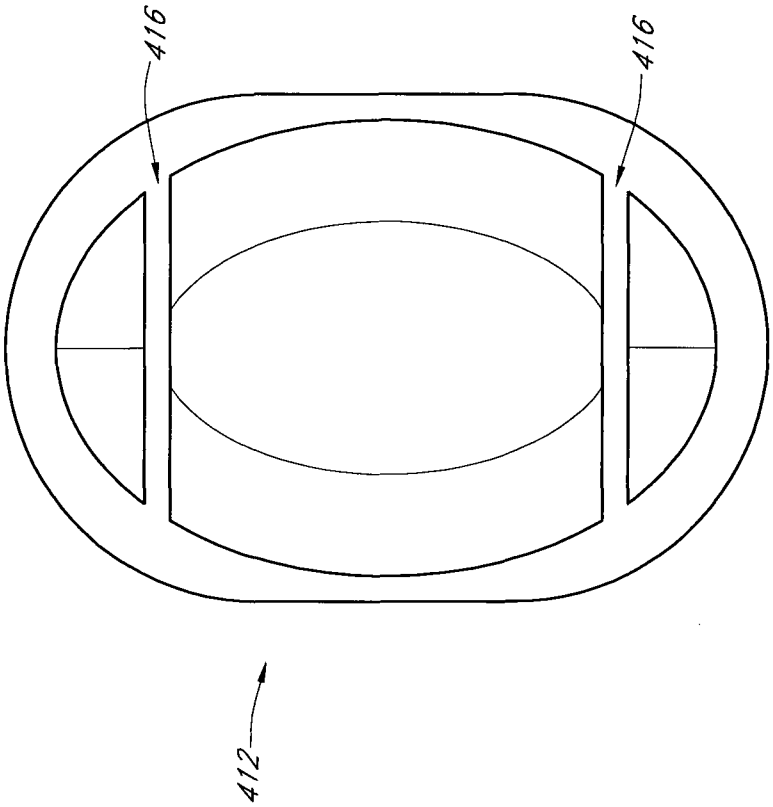

FIG. 47

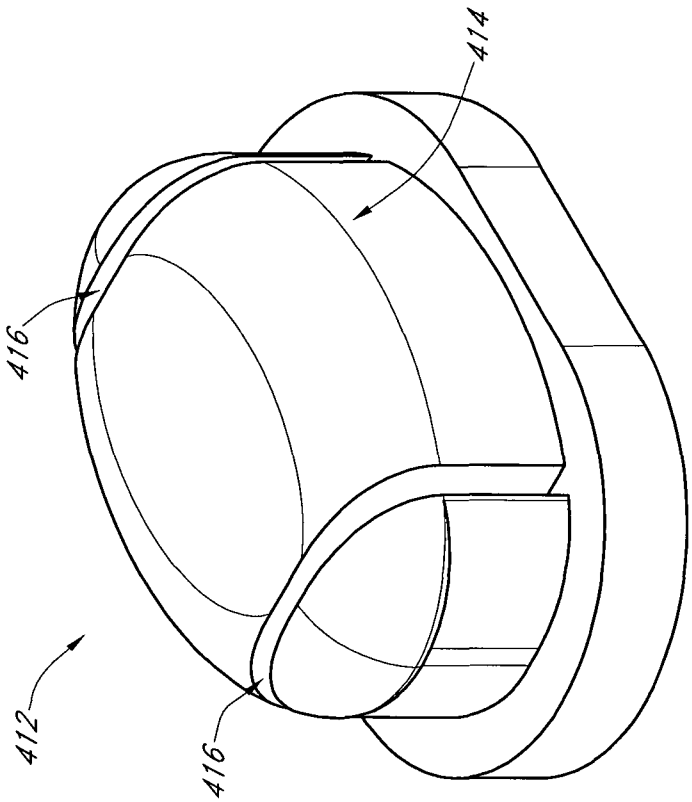

FIG. 46

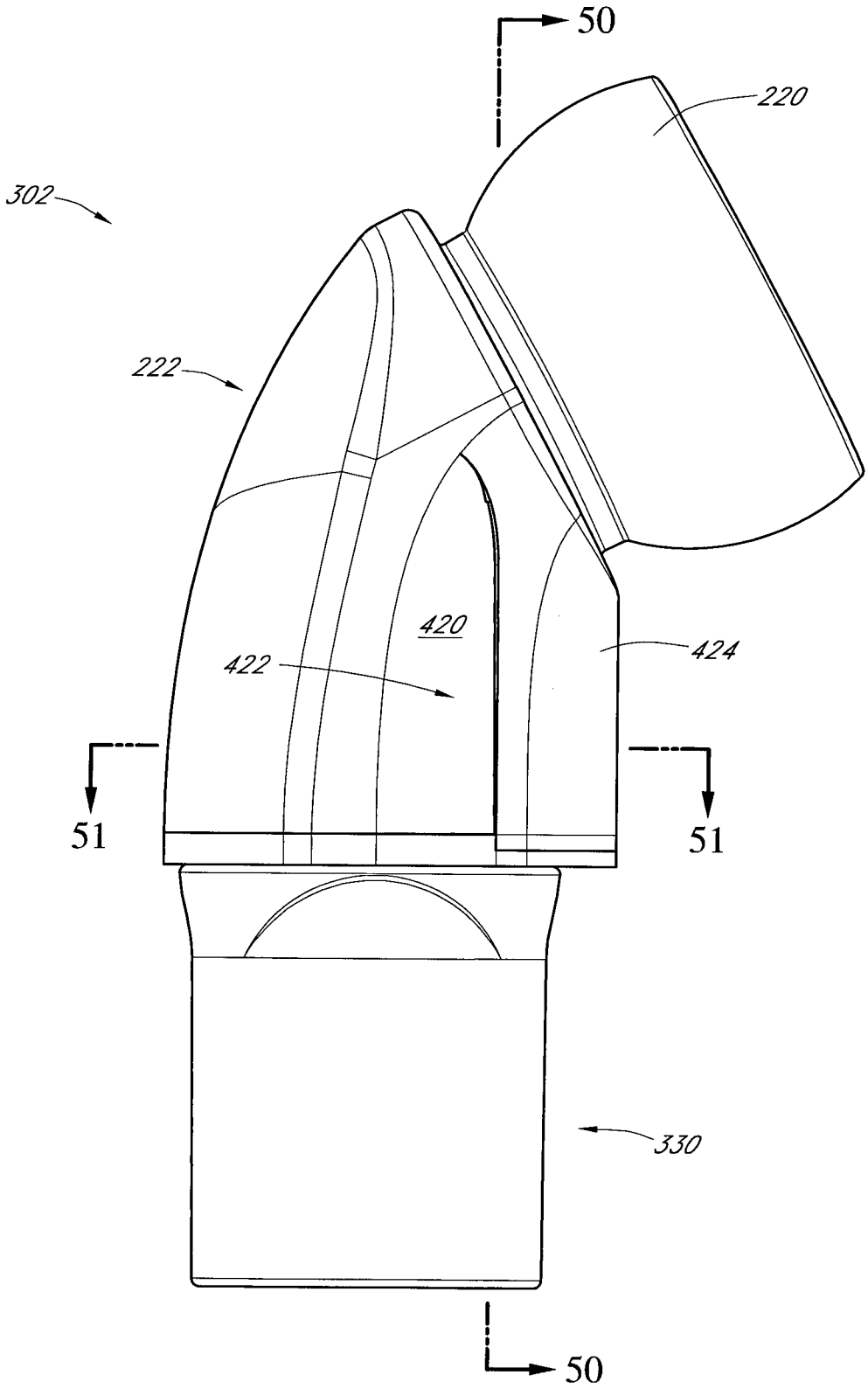

FIG. 48

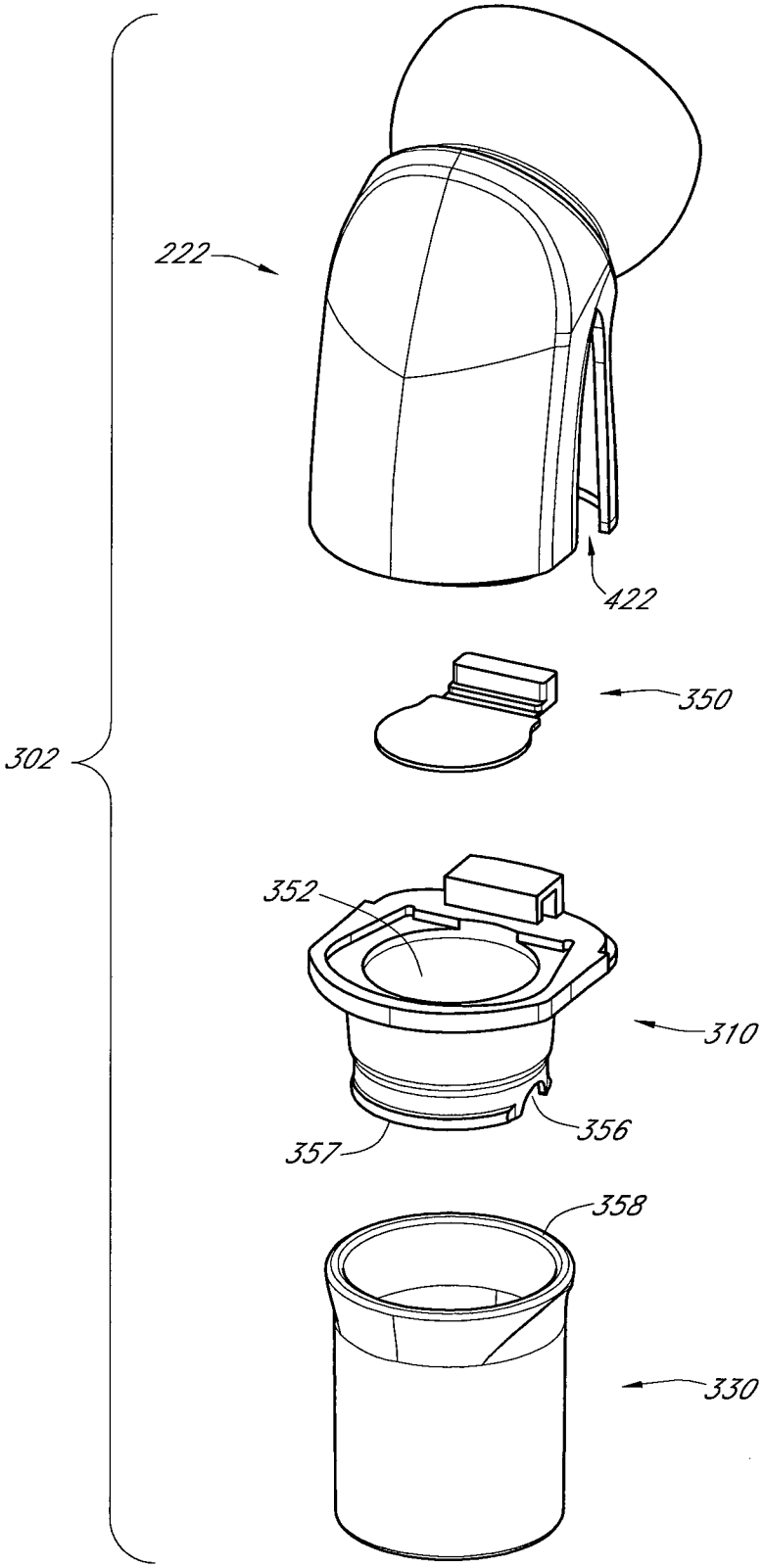

FIG. 49

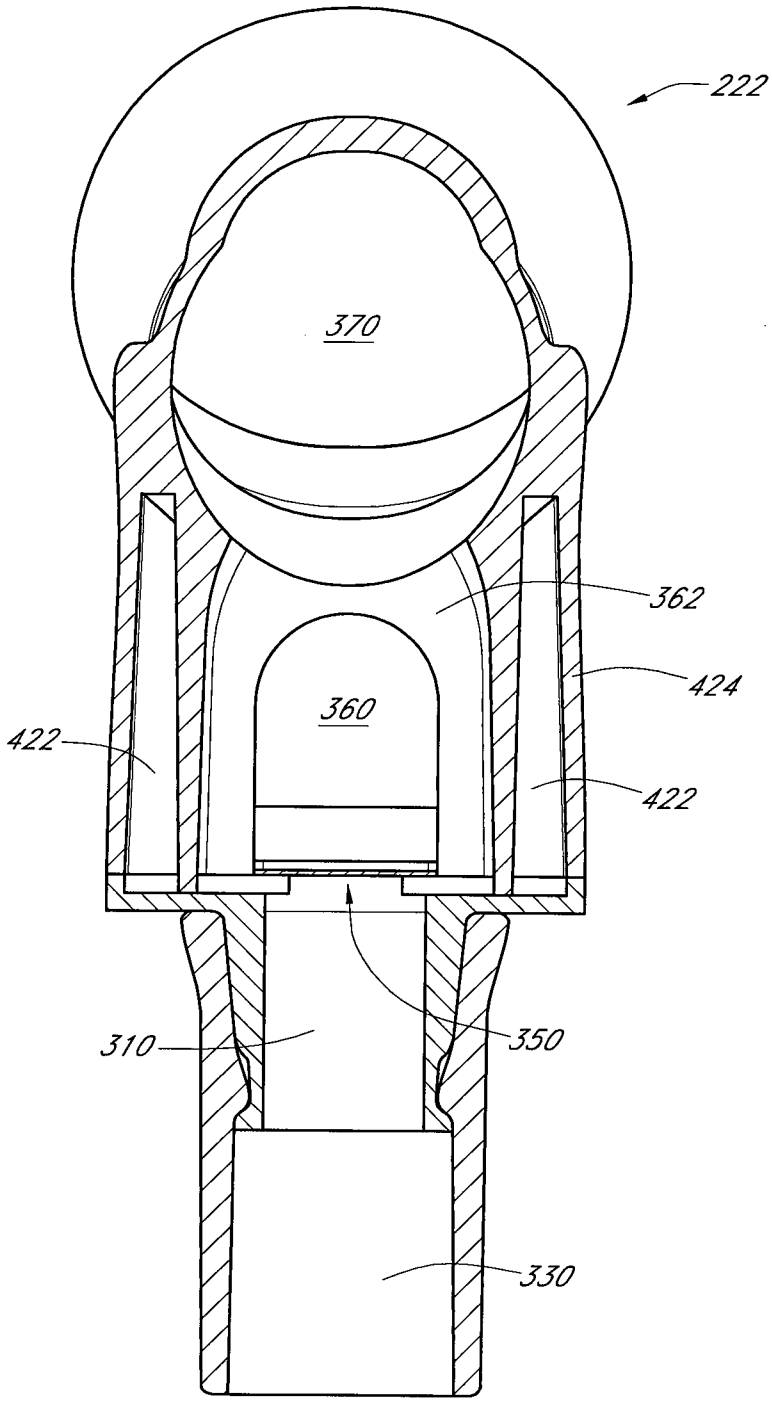

FIG. 50

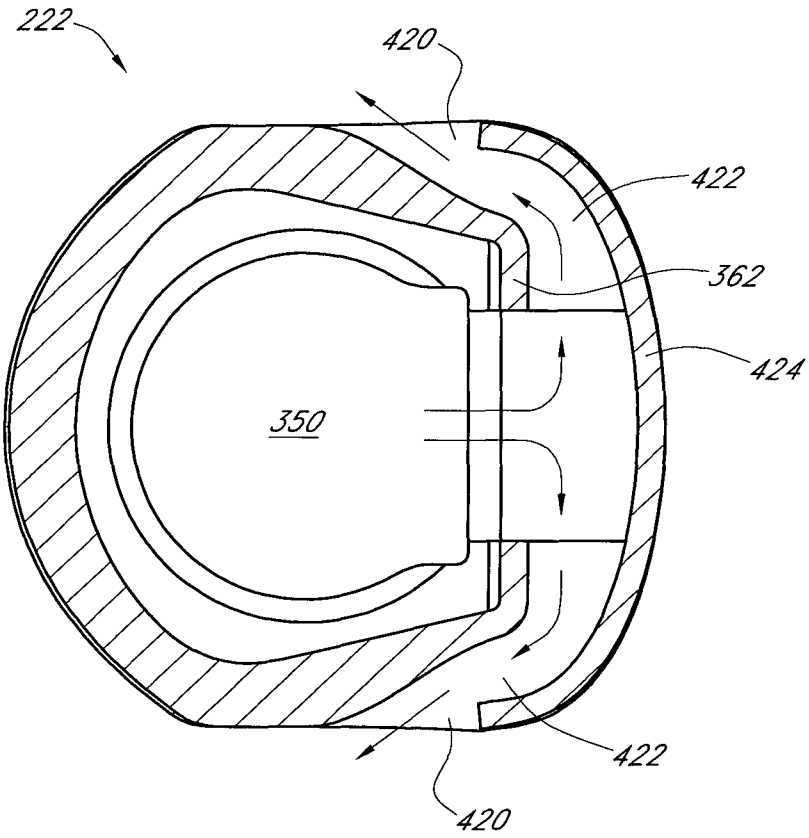

FIG. 51

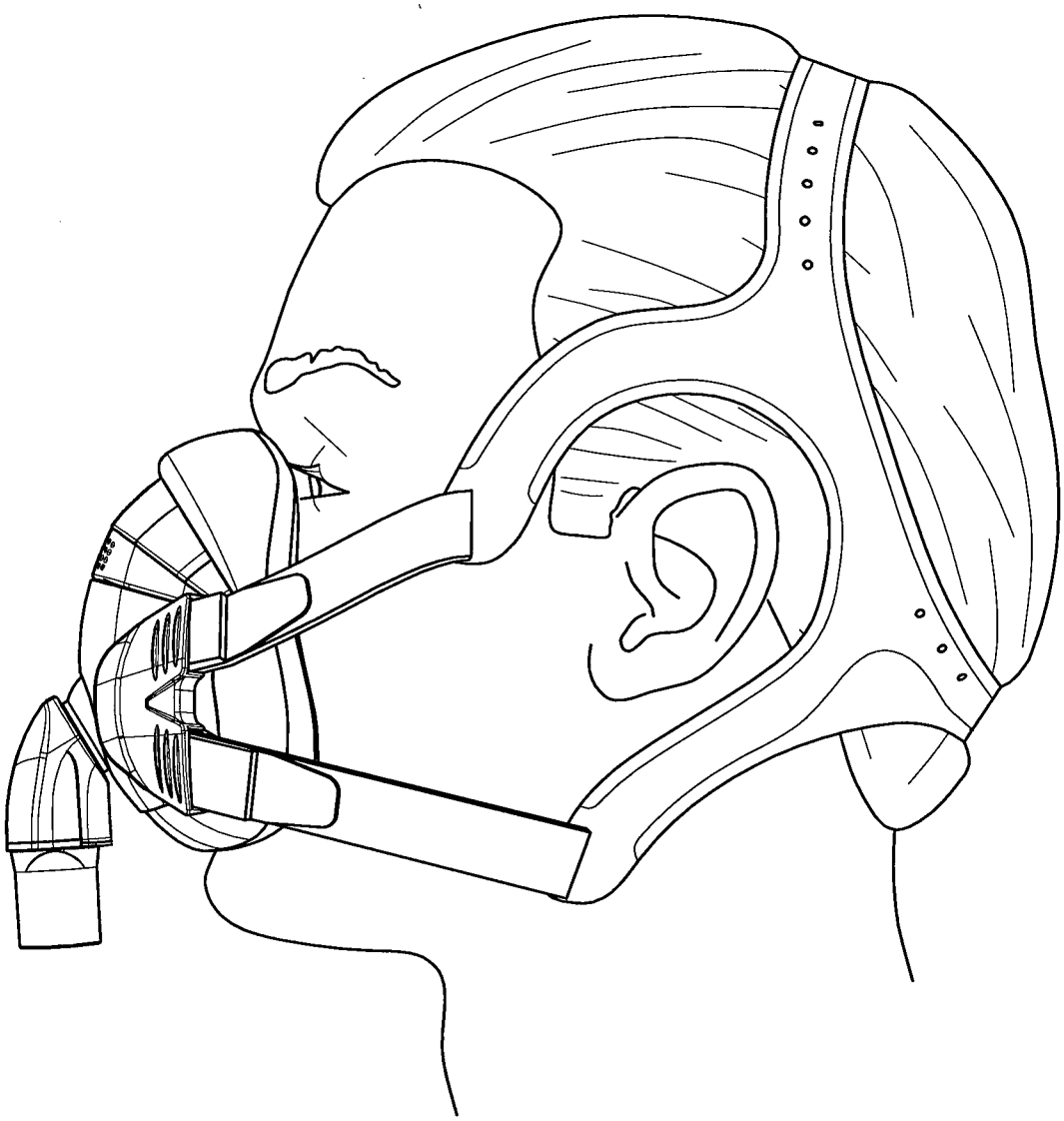

FIG. 52

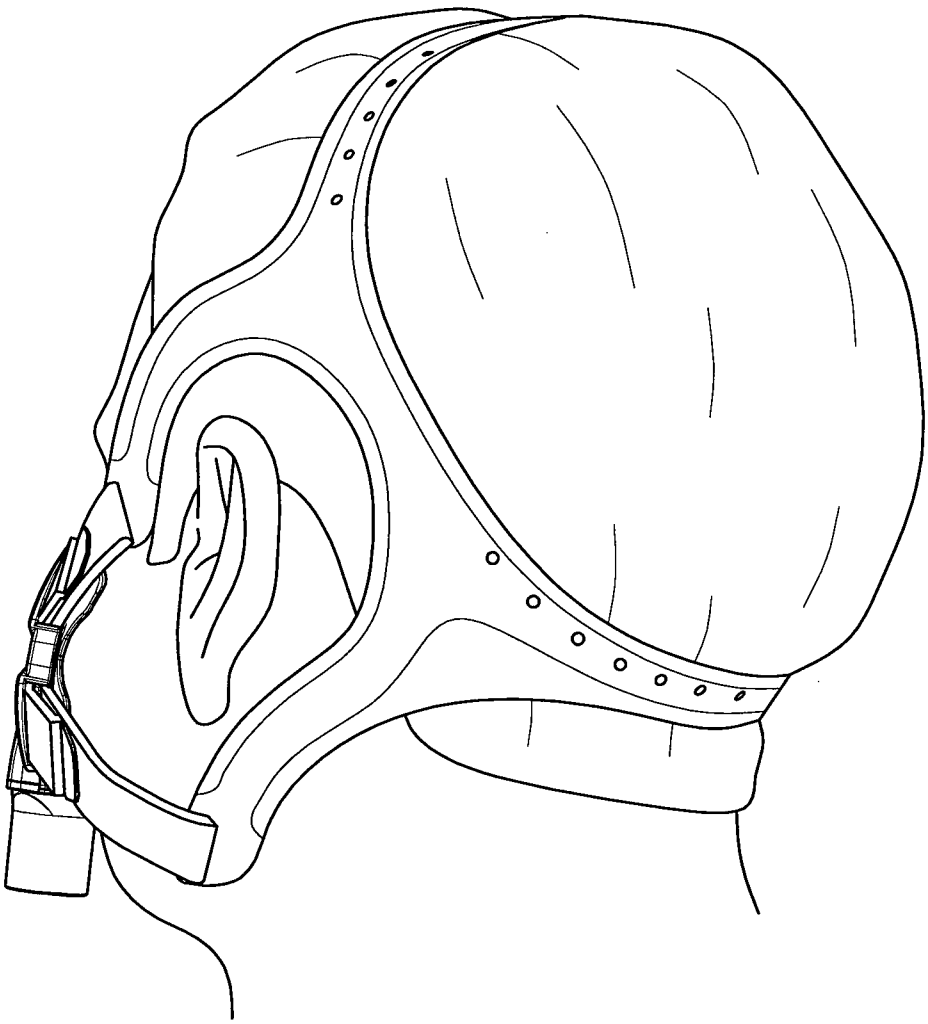

FIG. 53

FIG. 54

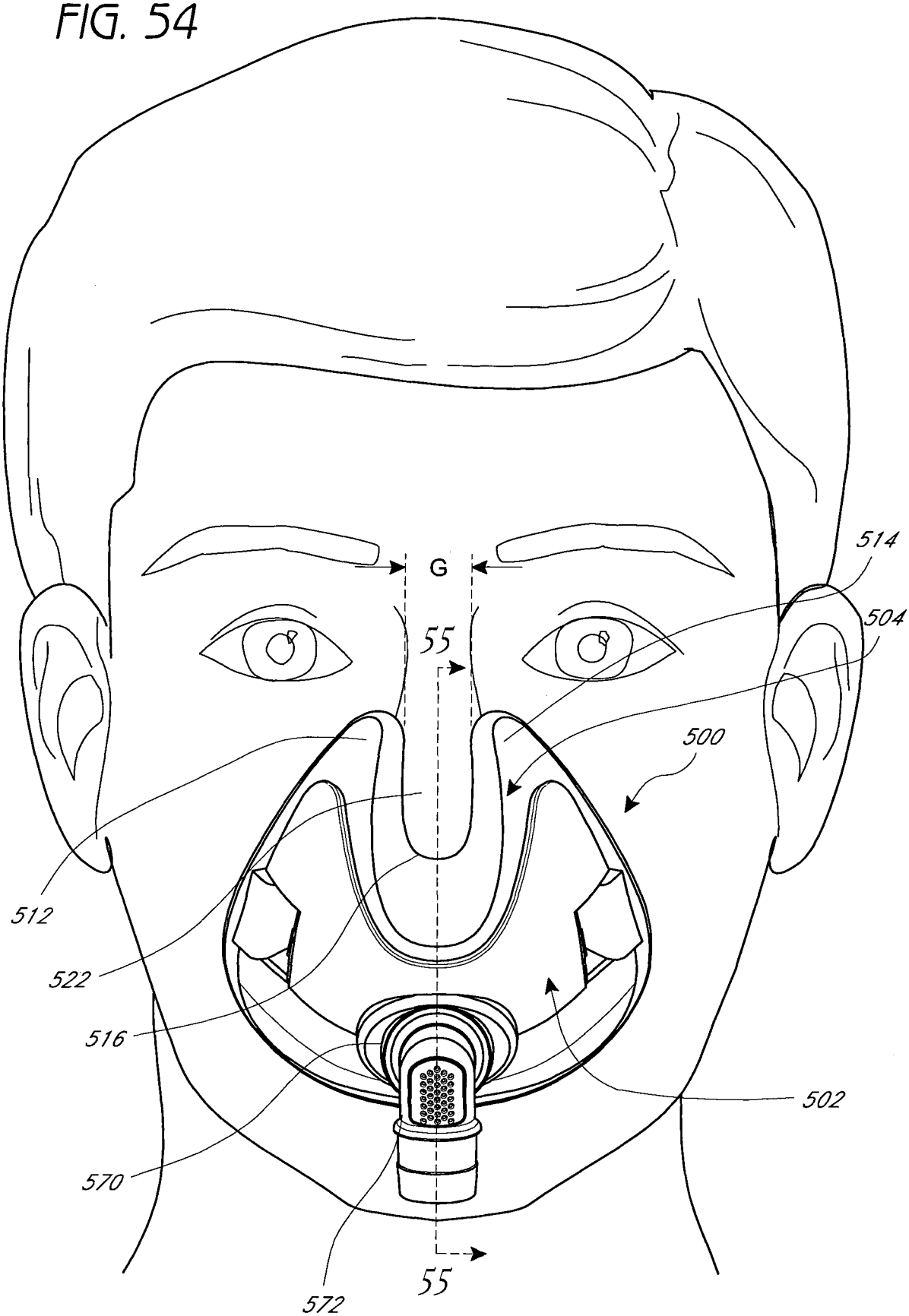

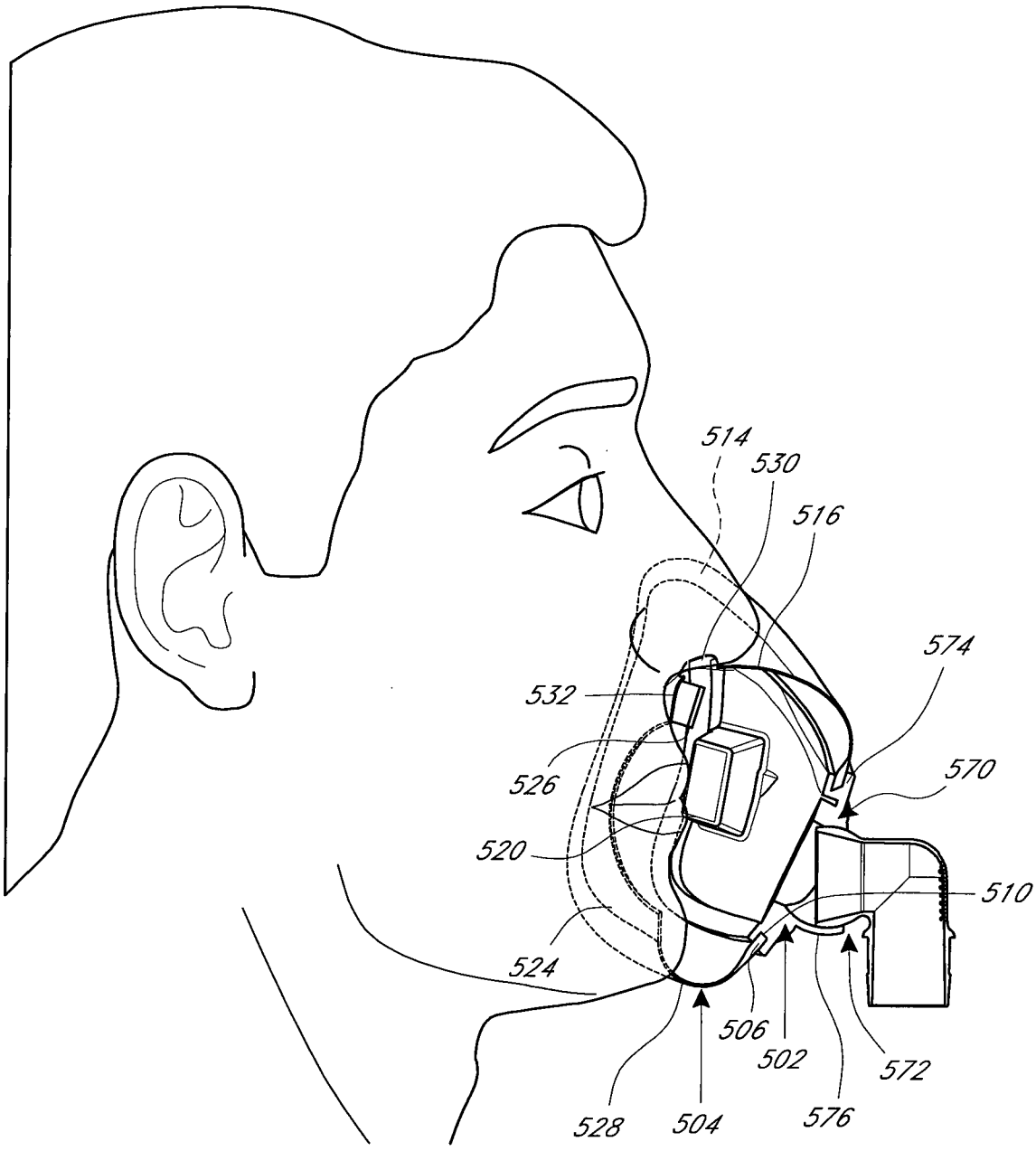

FIG. 55

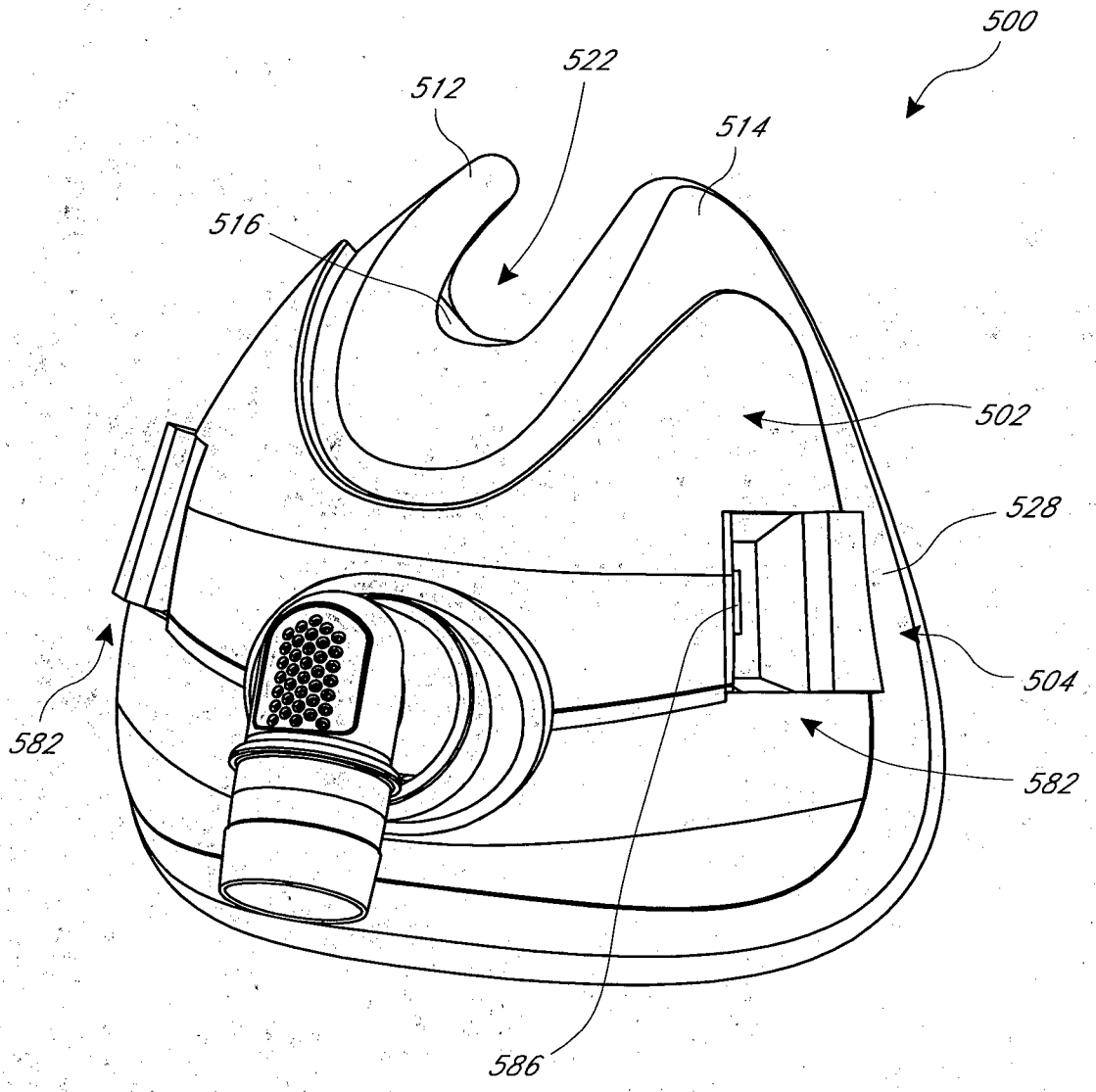

FIG. 56

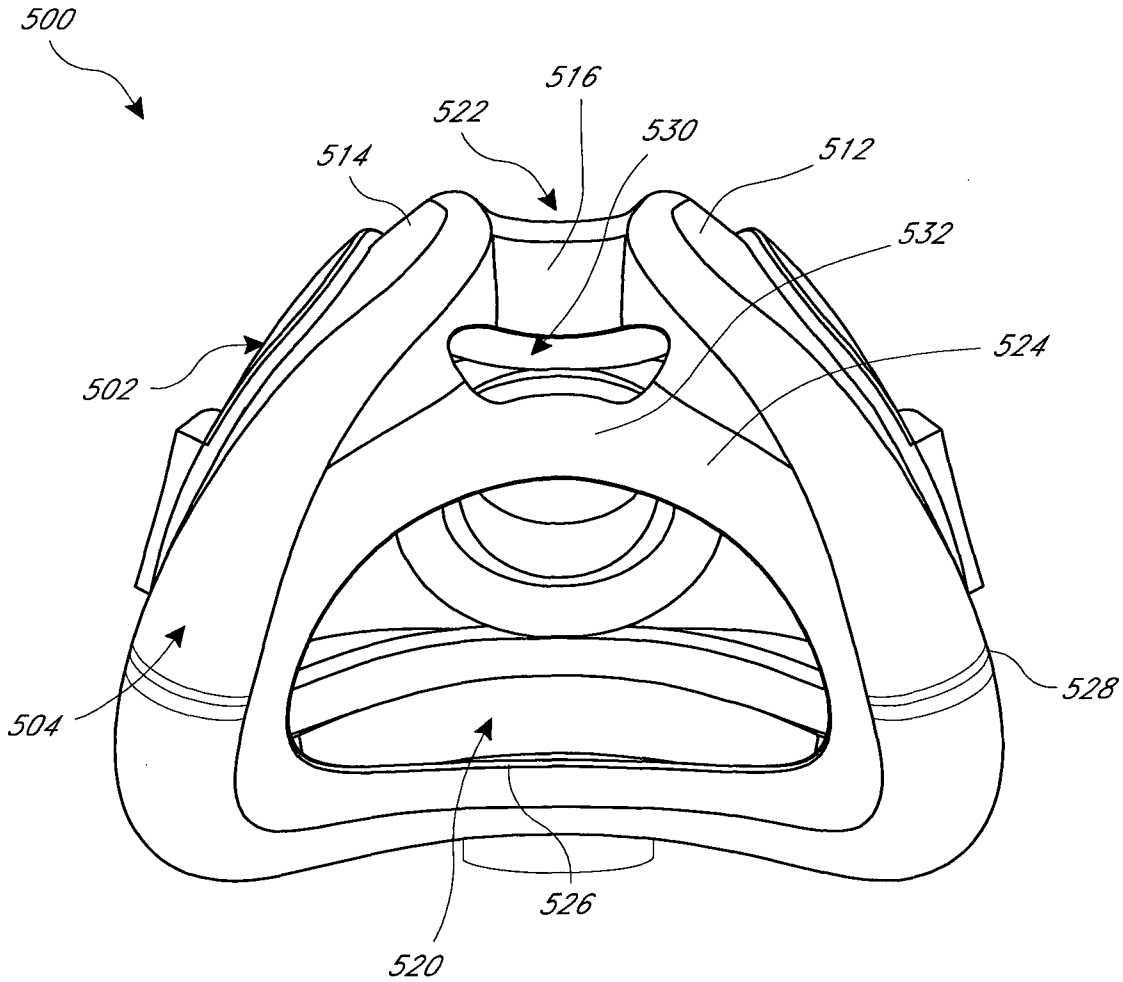

FIG. 57

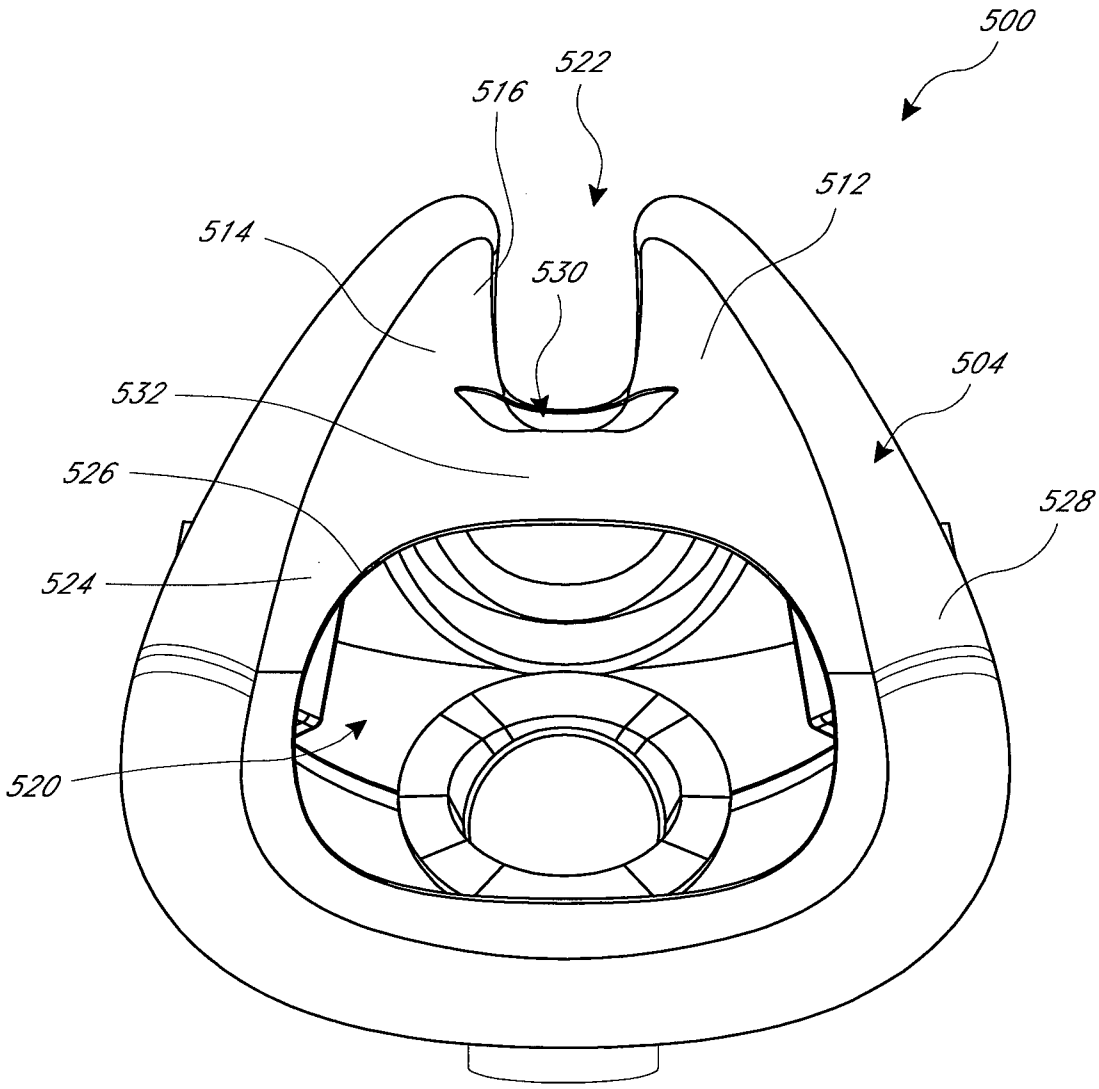

FIG. 58

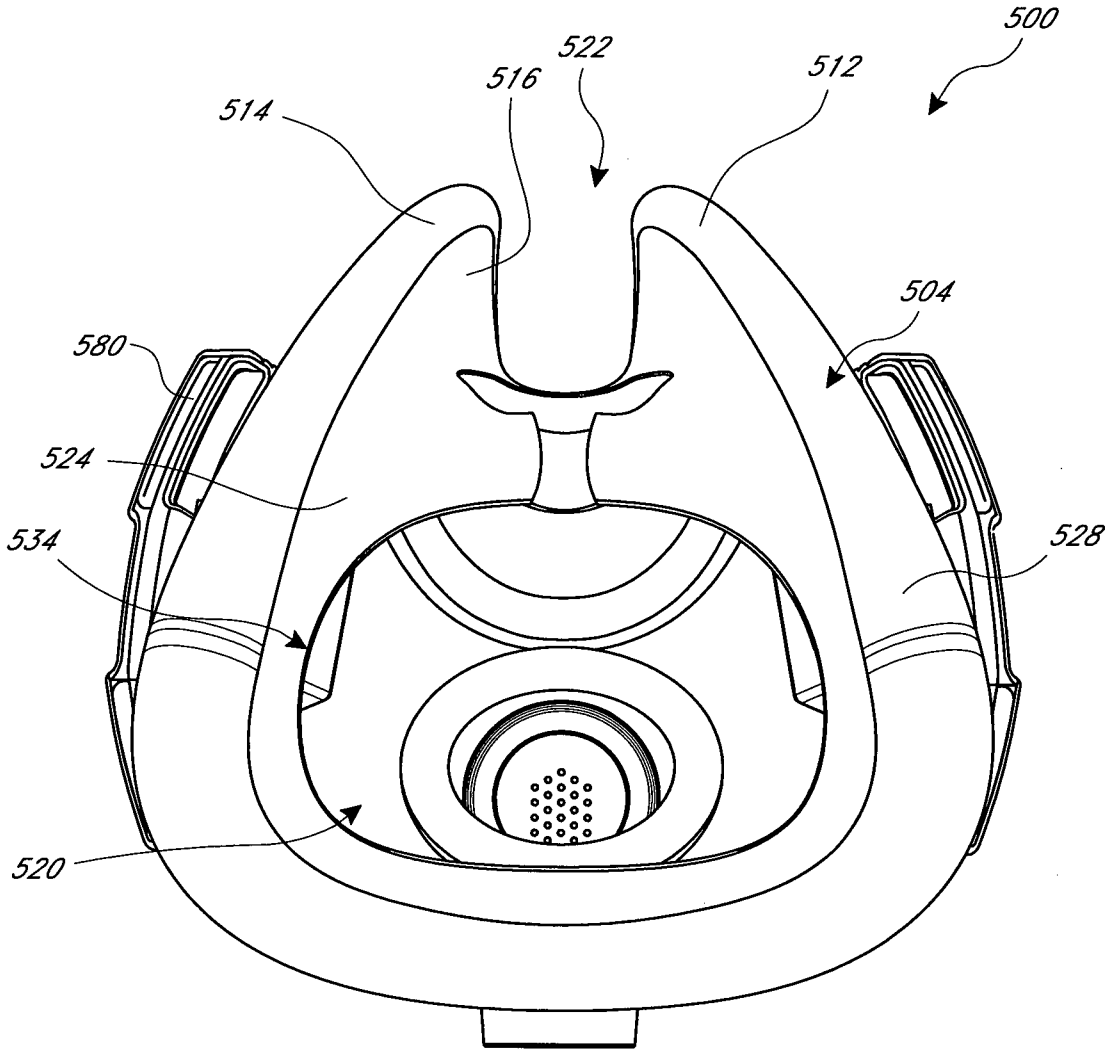

FIG. 59

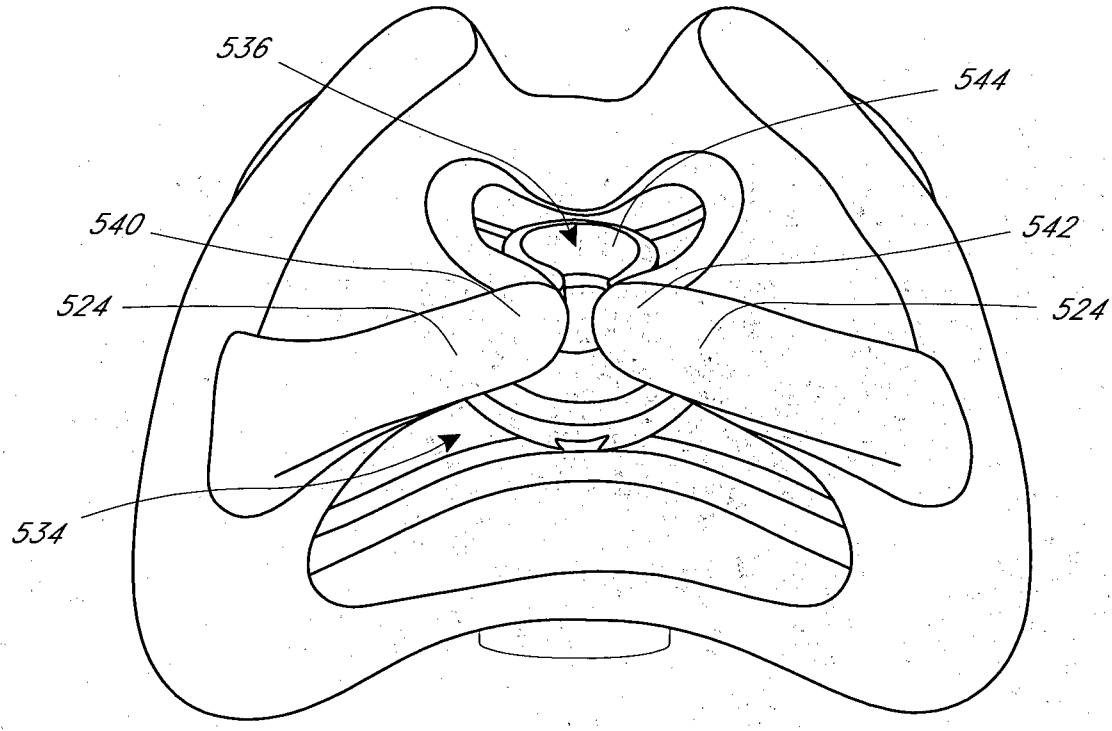

FIG. 60

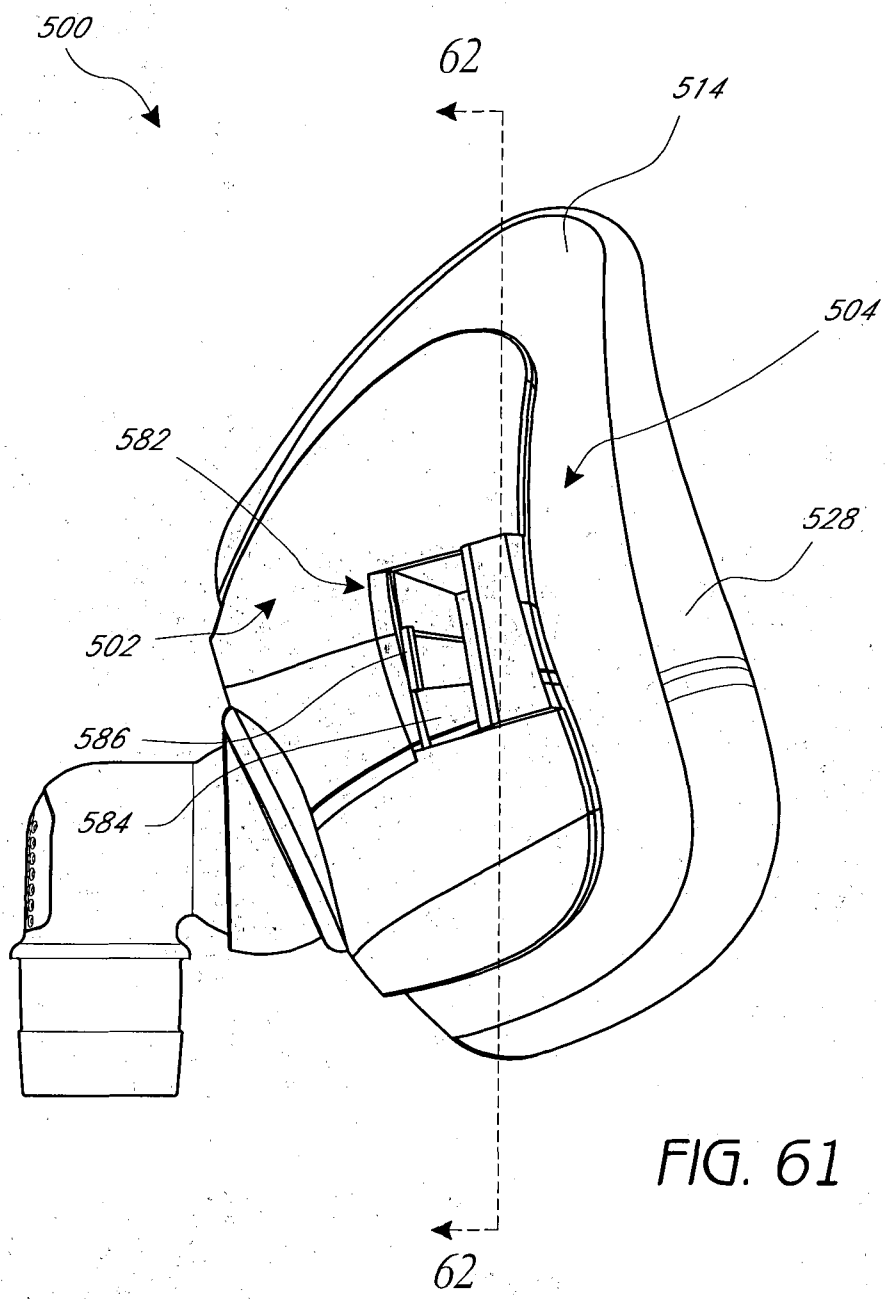

FIG. 61

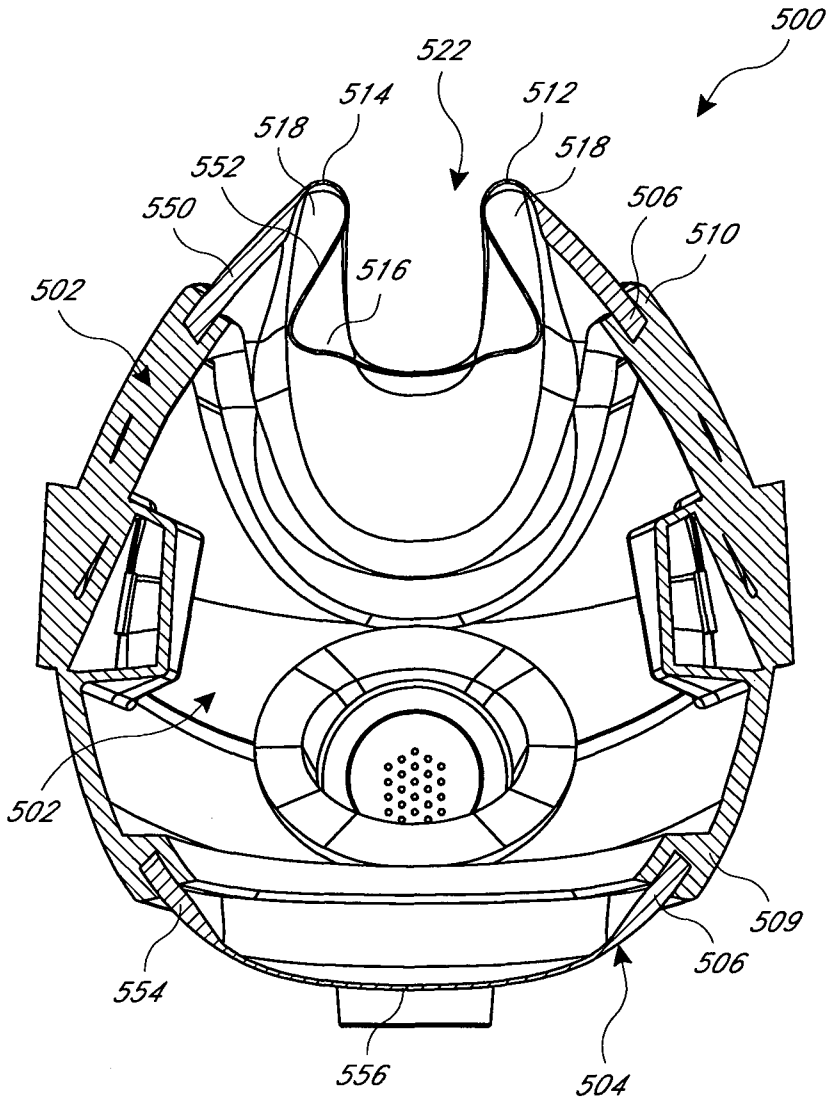
500
522
514
512
518
518
552
506
550
510
516
502
502
509
506
554
556
504

FIG. 62

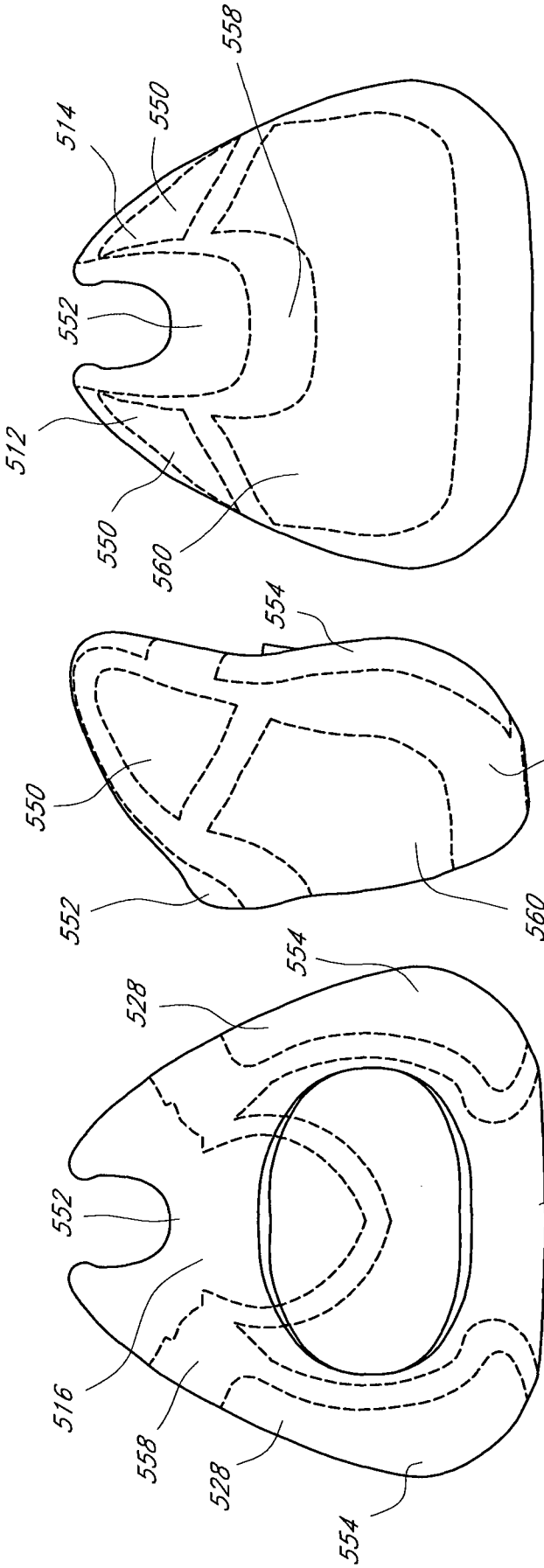

FIG. 65

FIG. 64

FIG. 63

FIG. 66

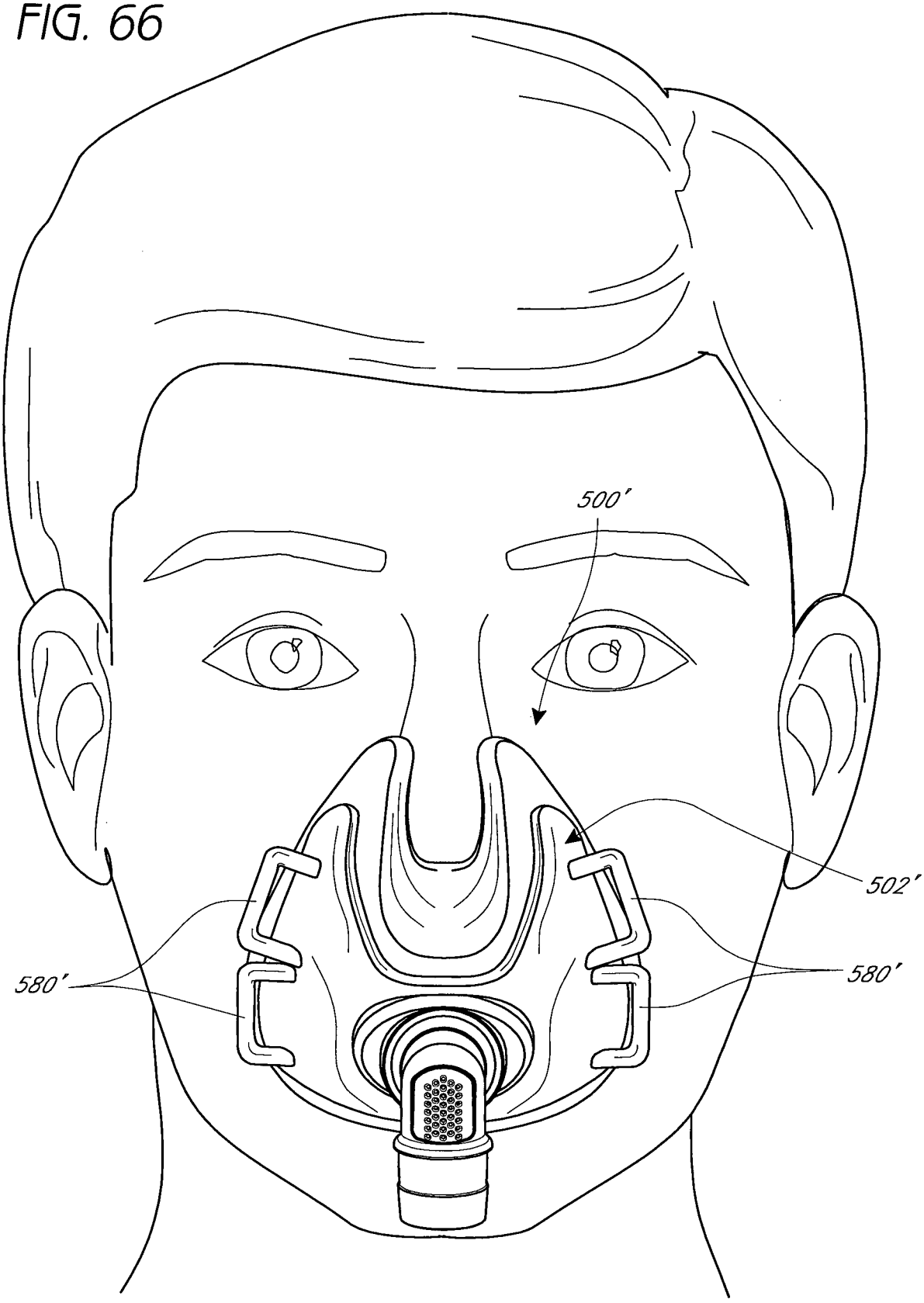

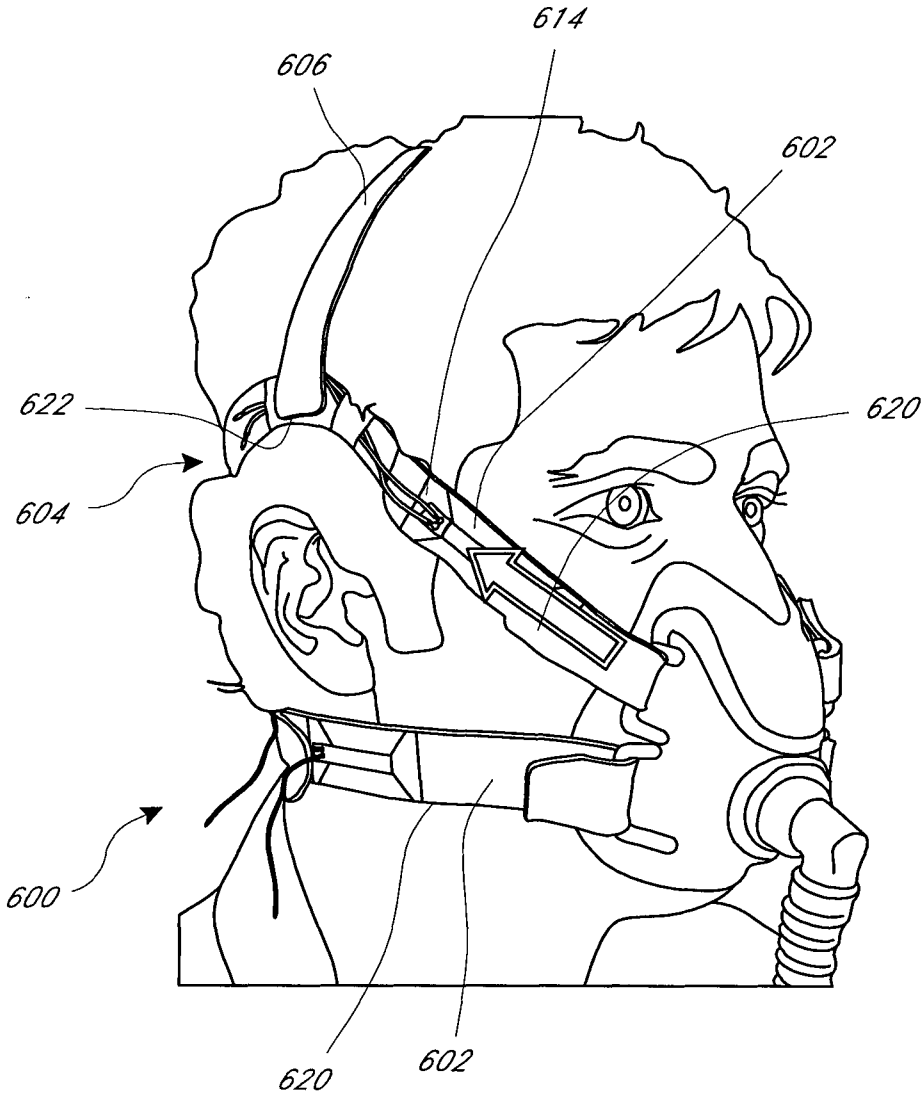

FIG. 67

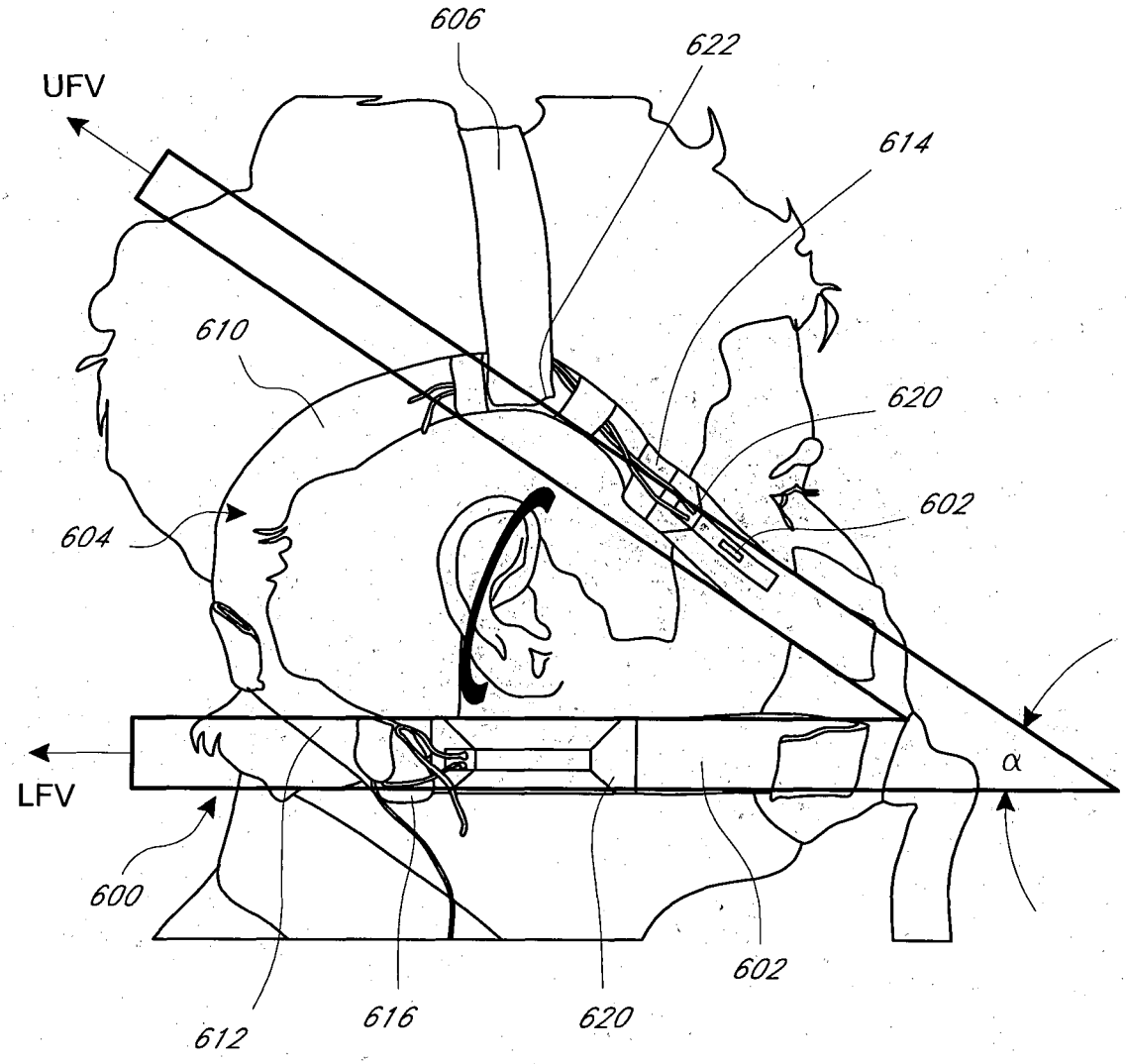

FIG. 68

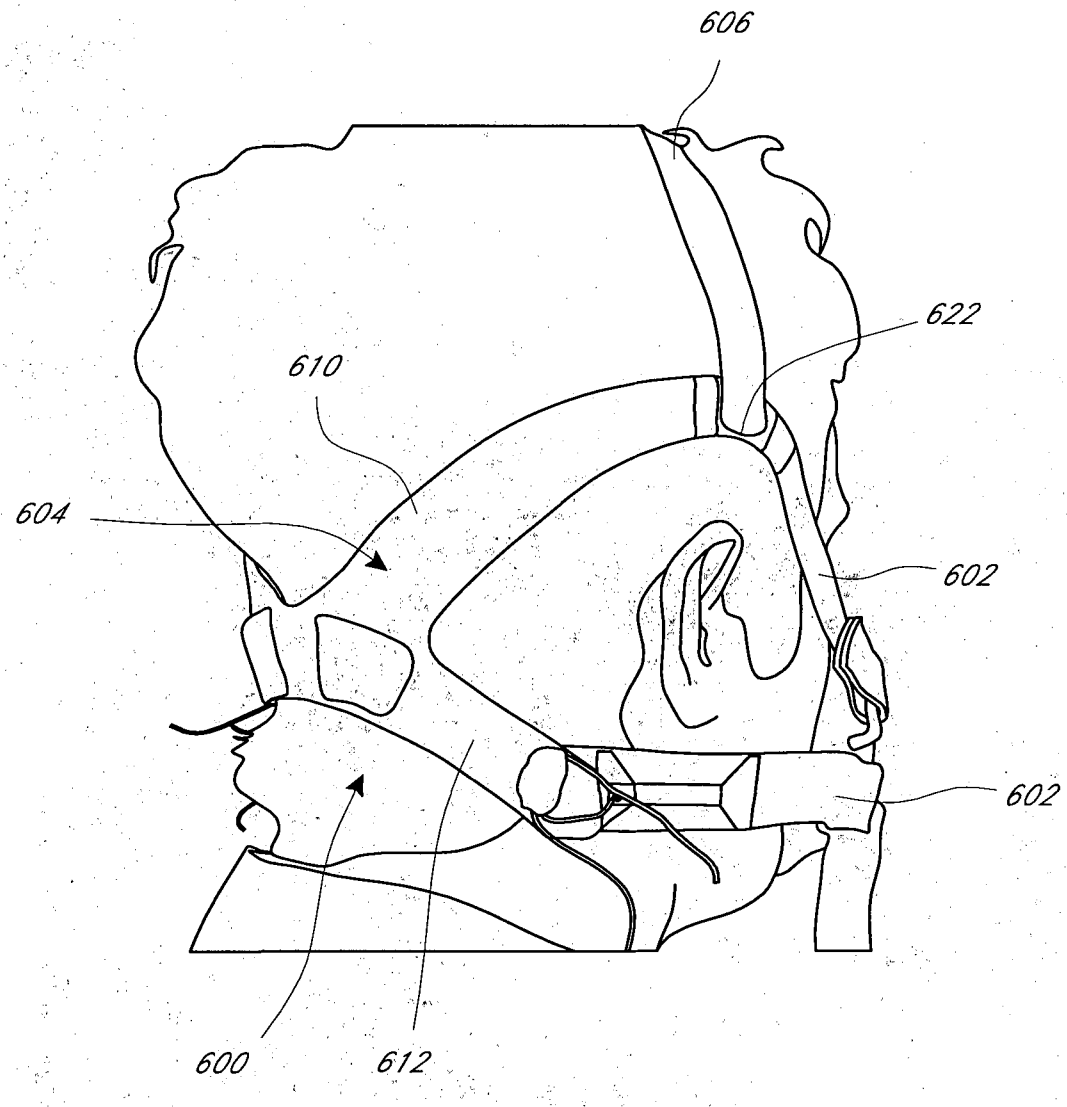

FIG. 69

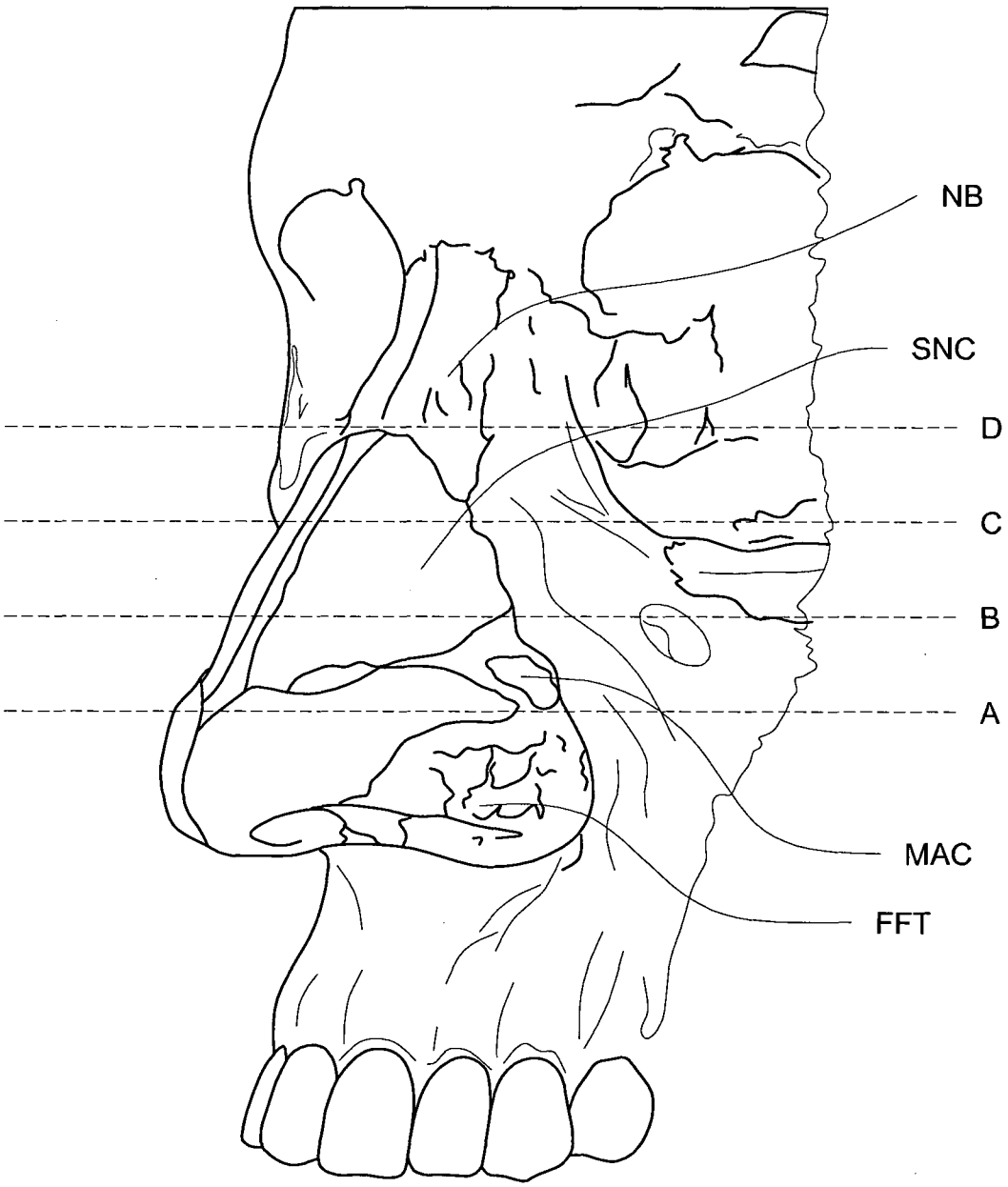

FIG. 70

FIG. 71

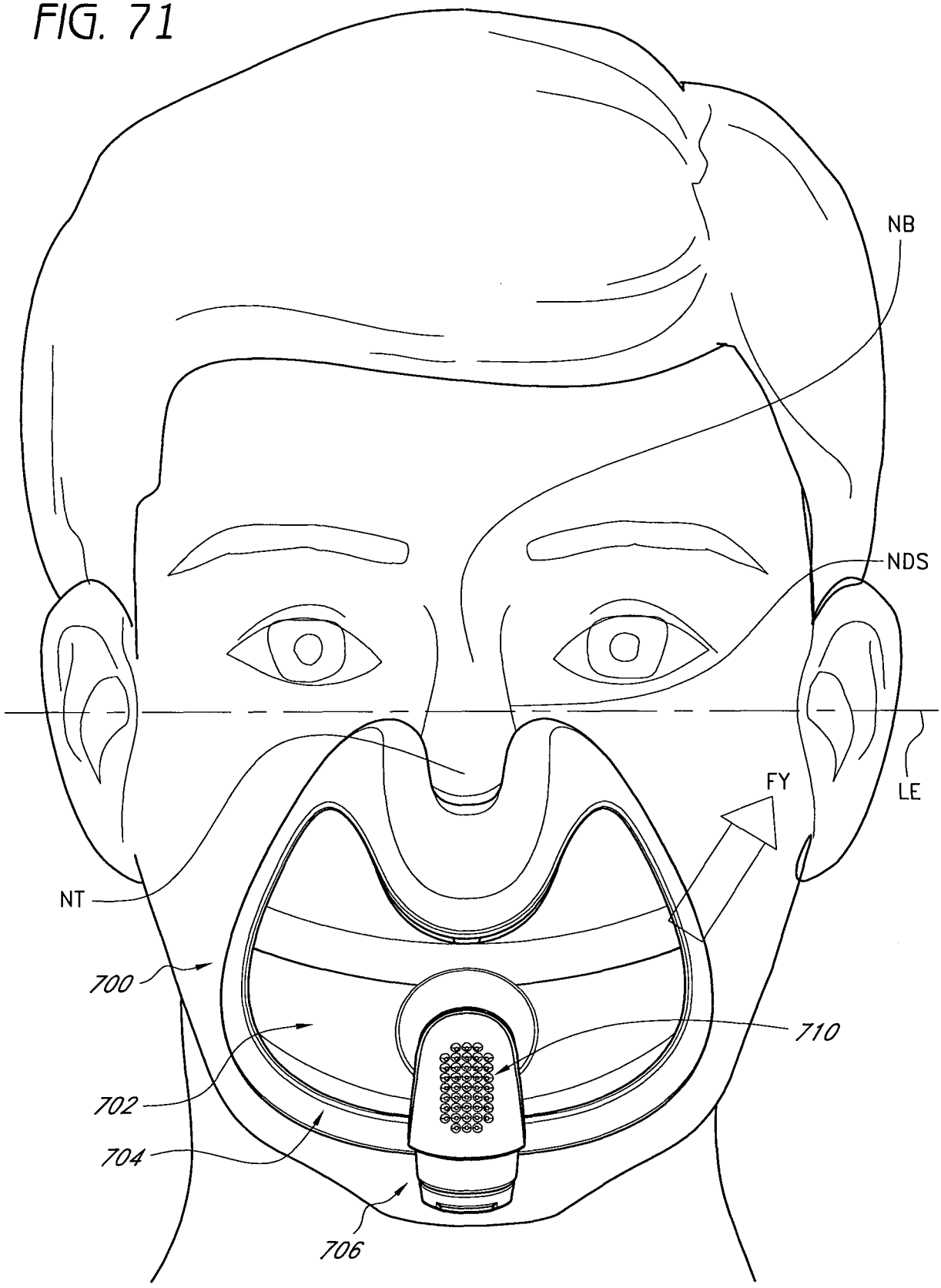

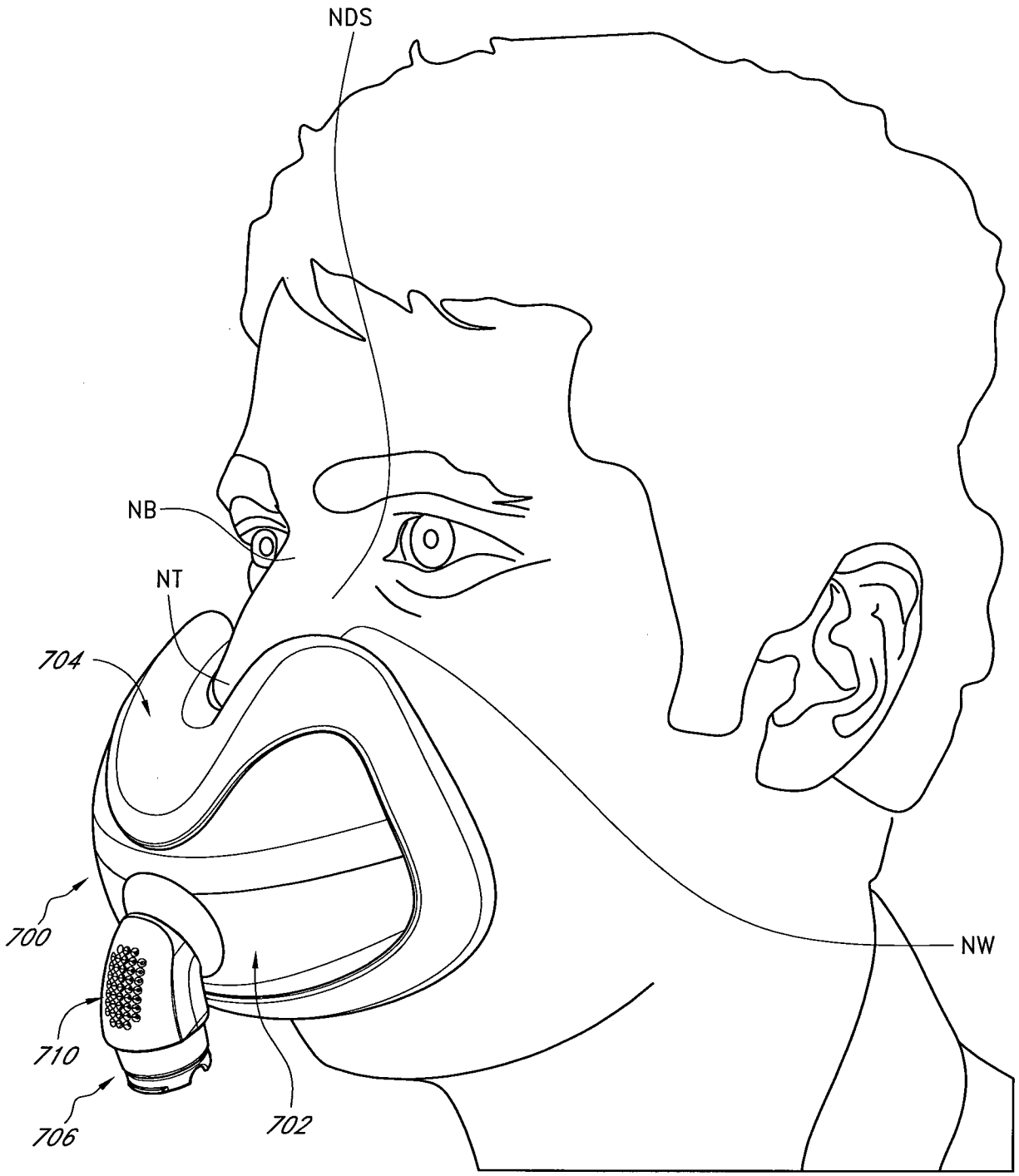

FIG. 72

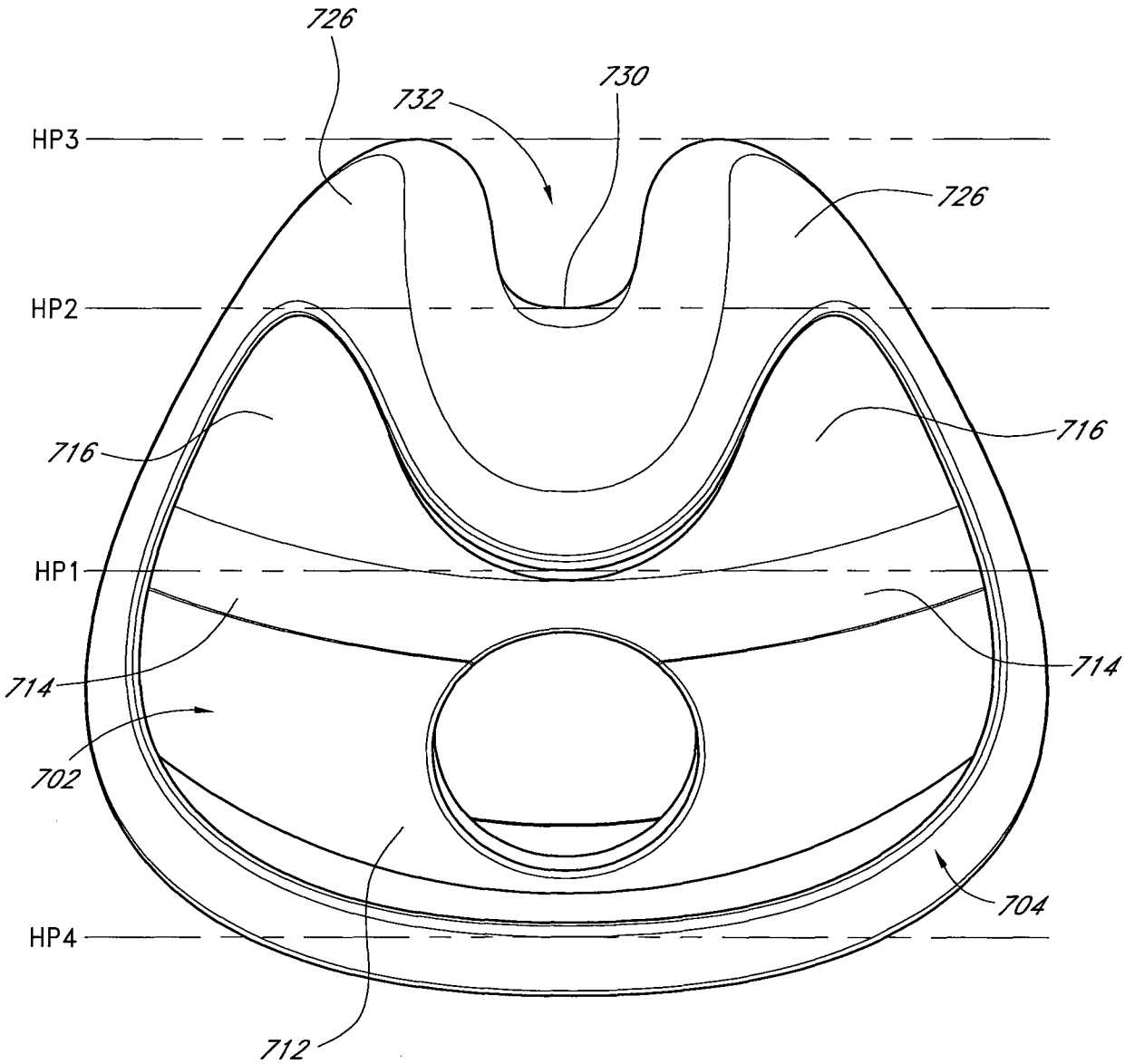

FIG. 73

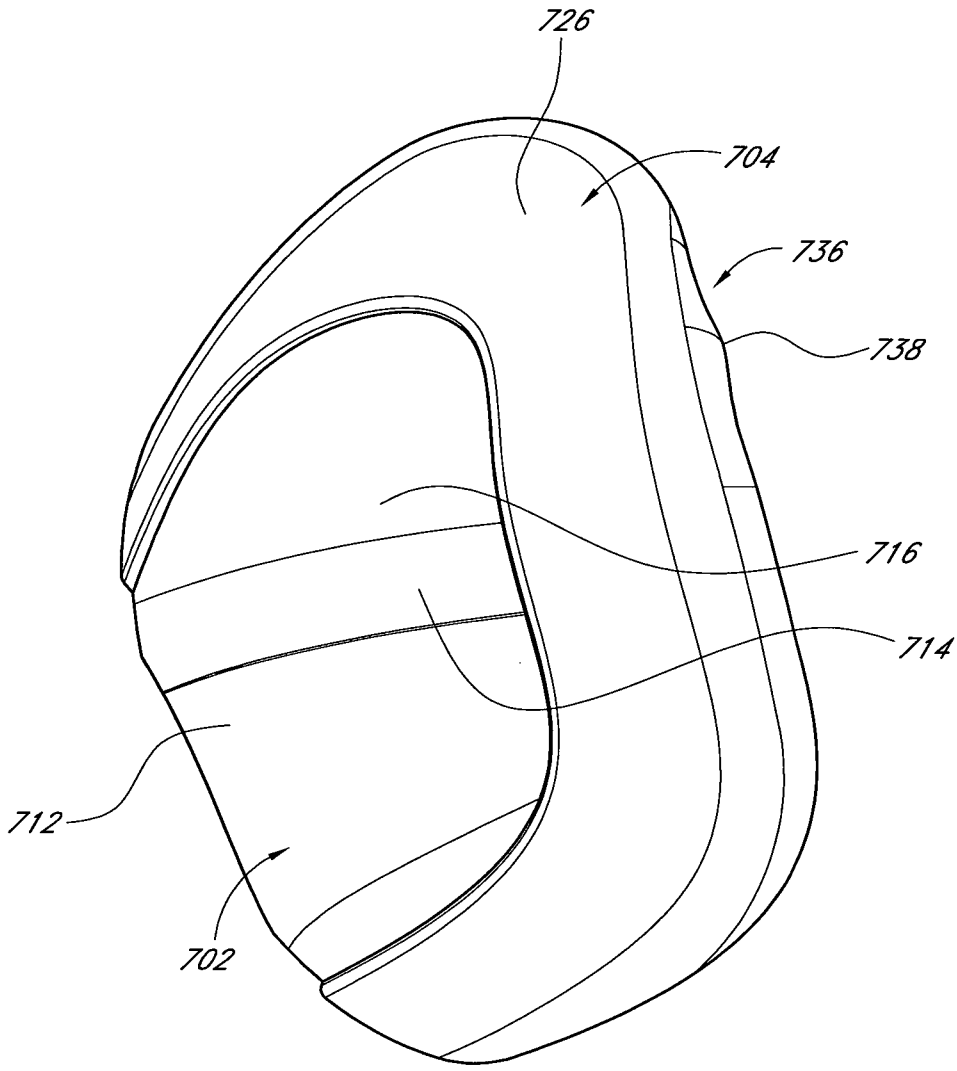

FIG. 74

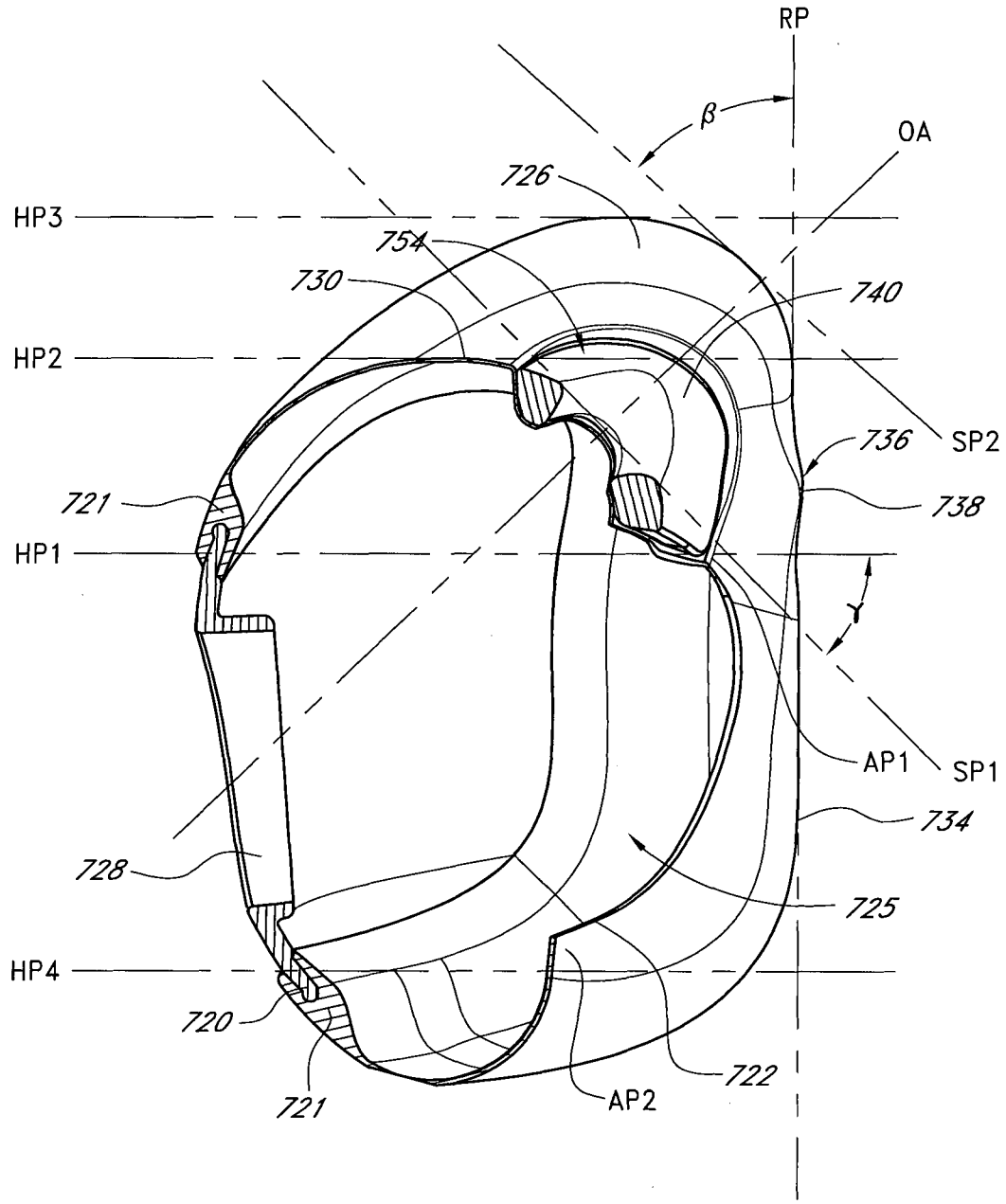
RP
β
OA
726
HP3
754
730
740
HP2
736
SP2
721
738
HP1
γ
AP1
SP1
734
728
725
HP4
720
722
721
AP2

FIG. 75

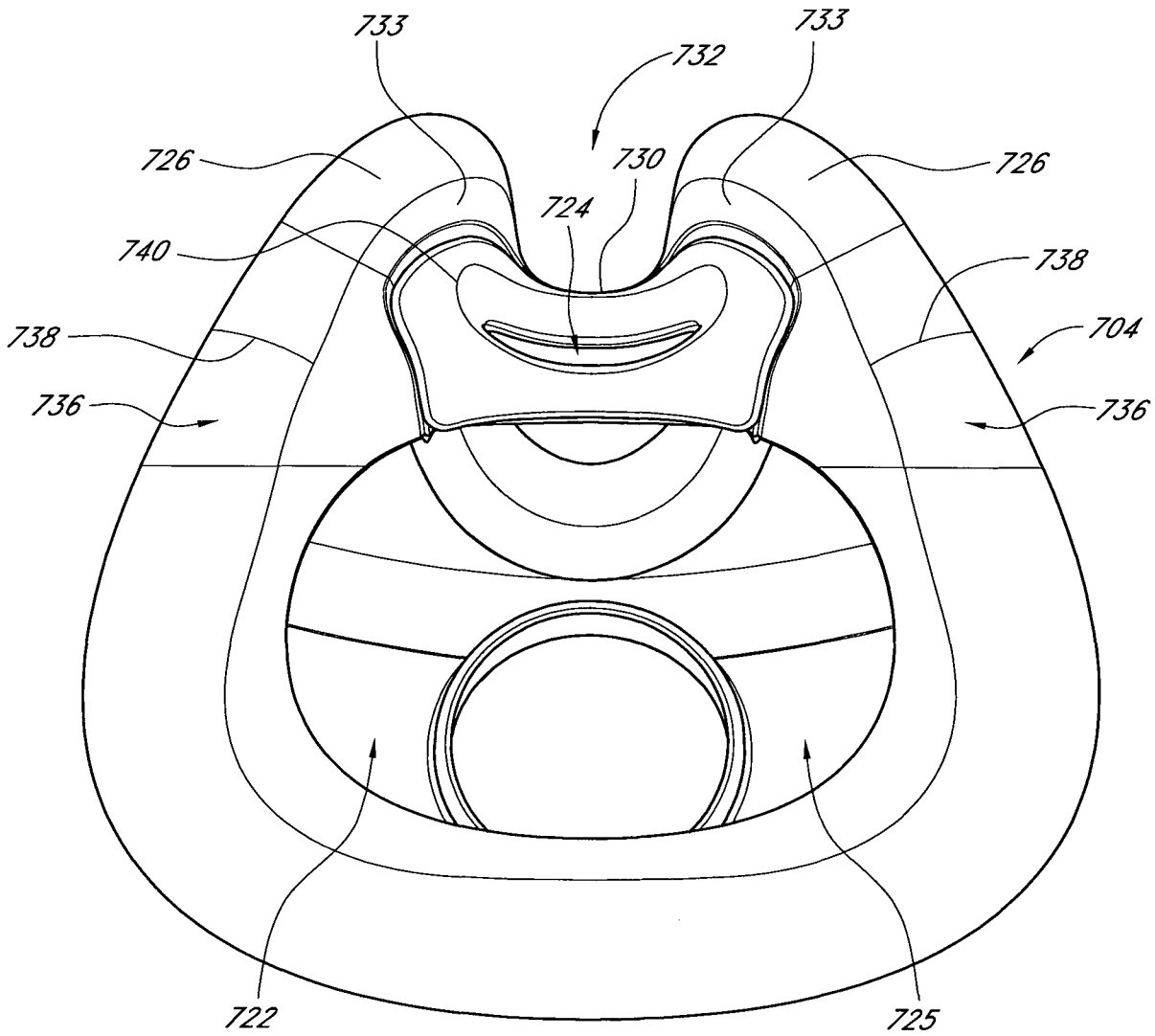

FIG. 76

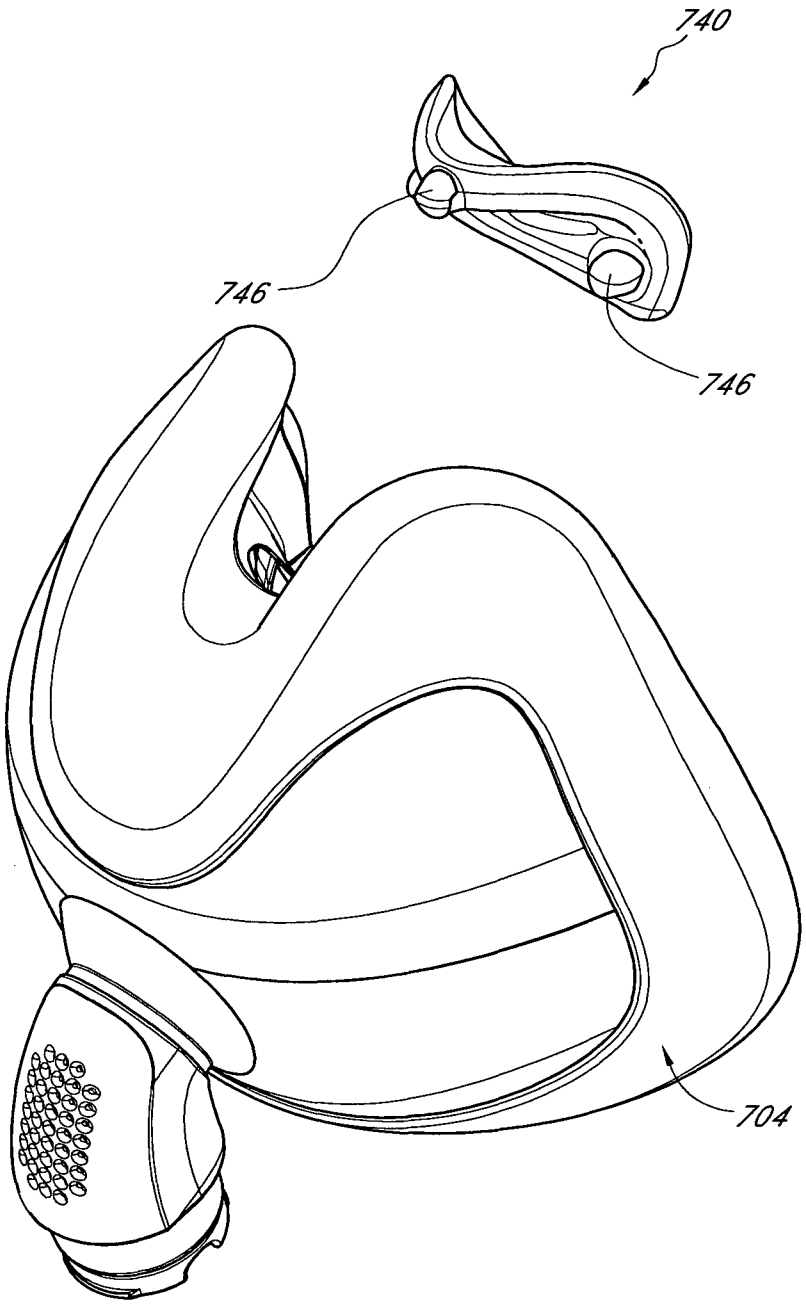

FIG. 77

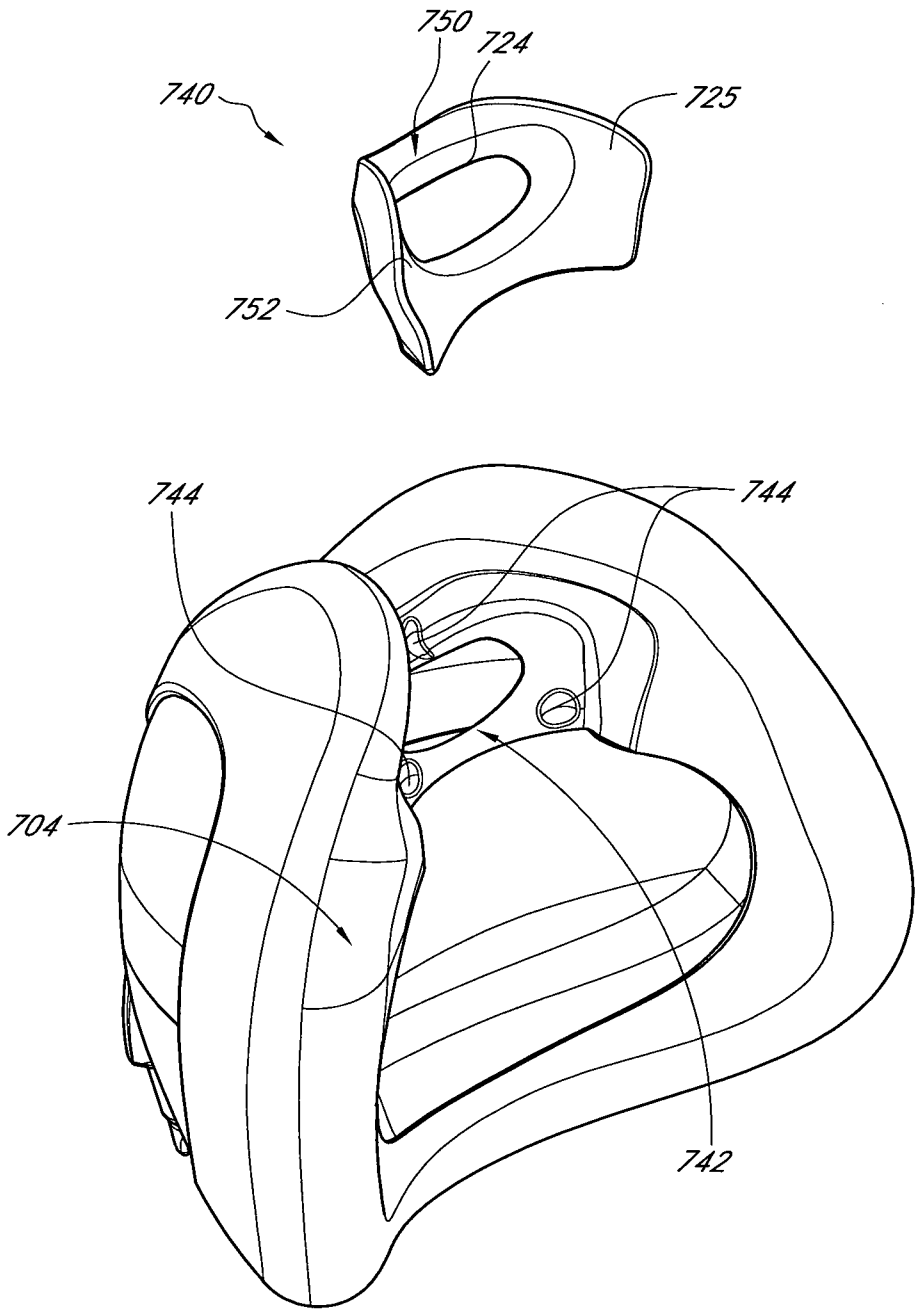

FIG. 78

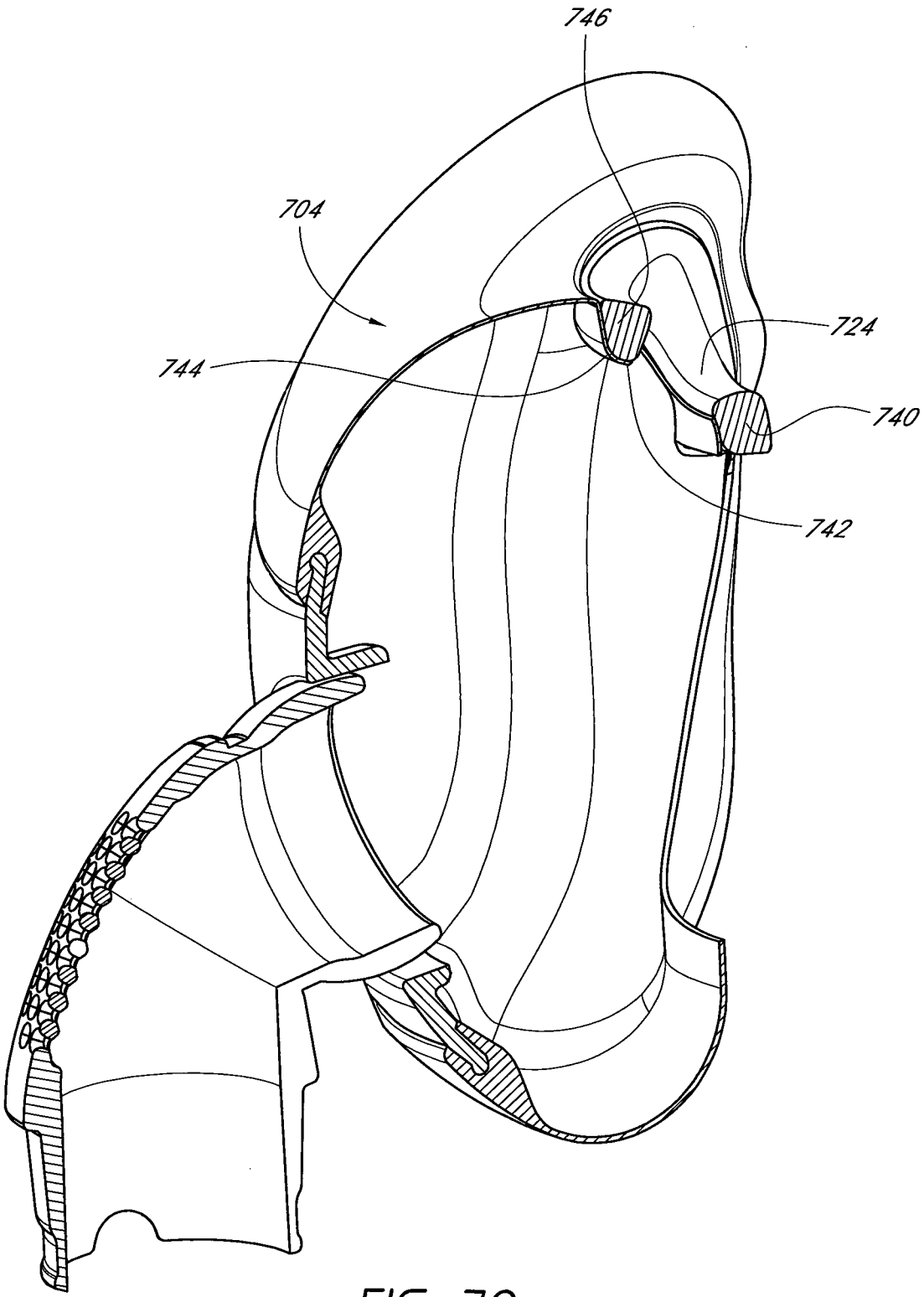

FIG. 79

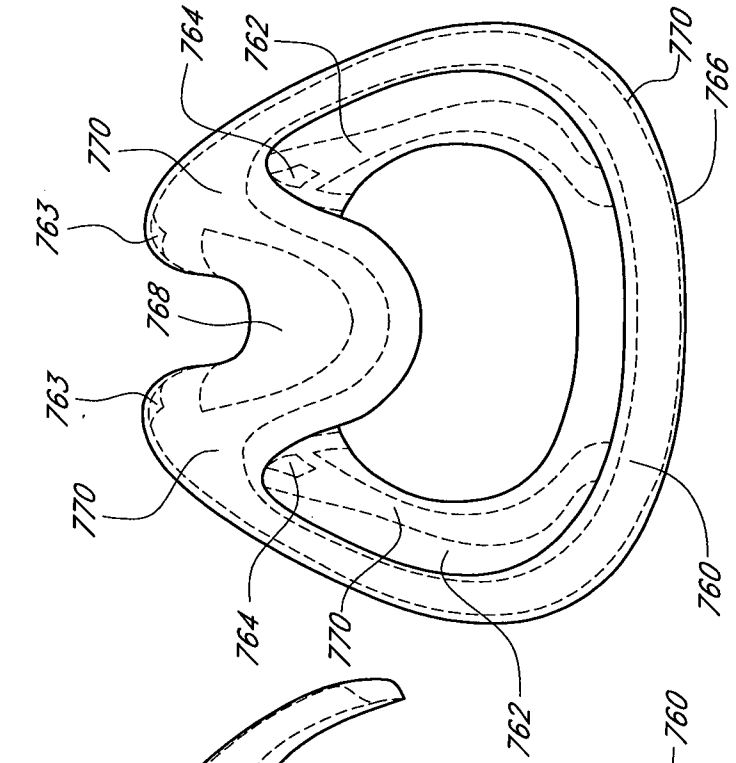

FIG. 80

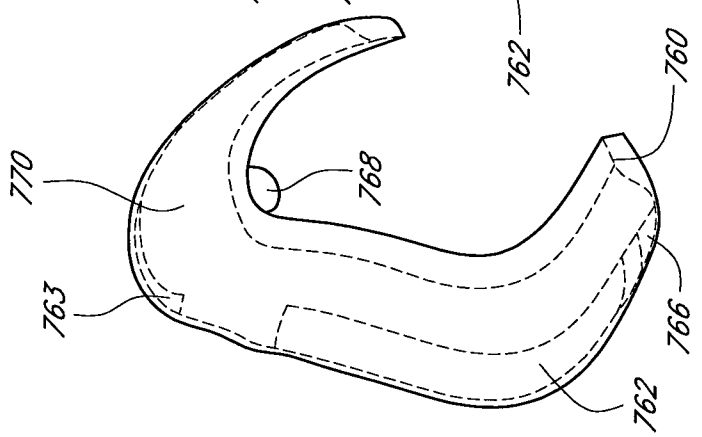

FIG. 82

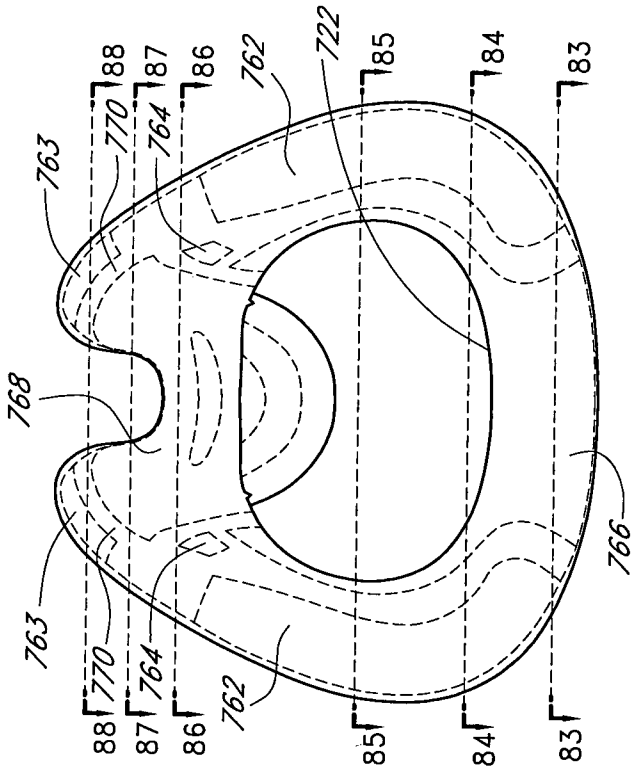

FIG. 81

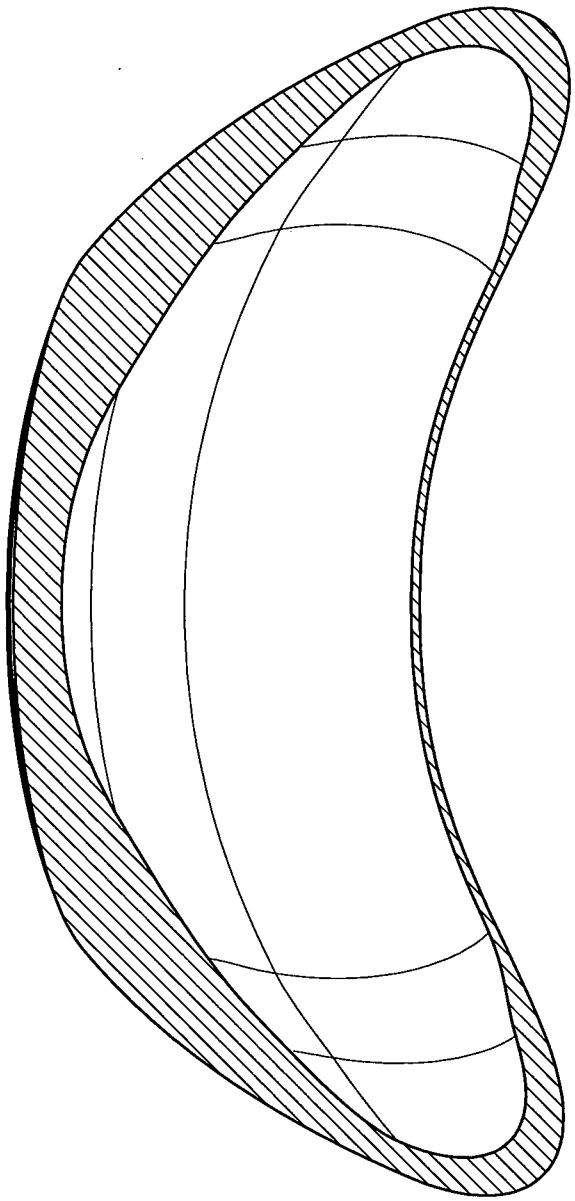

FIG. 83

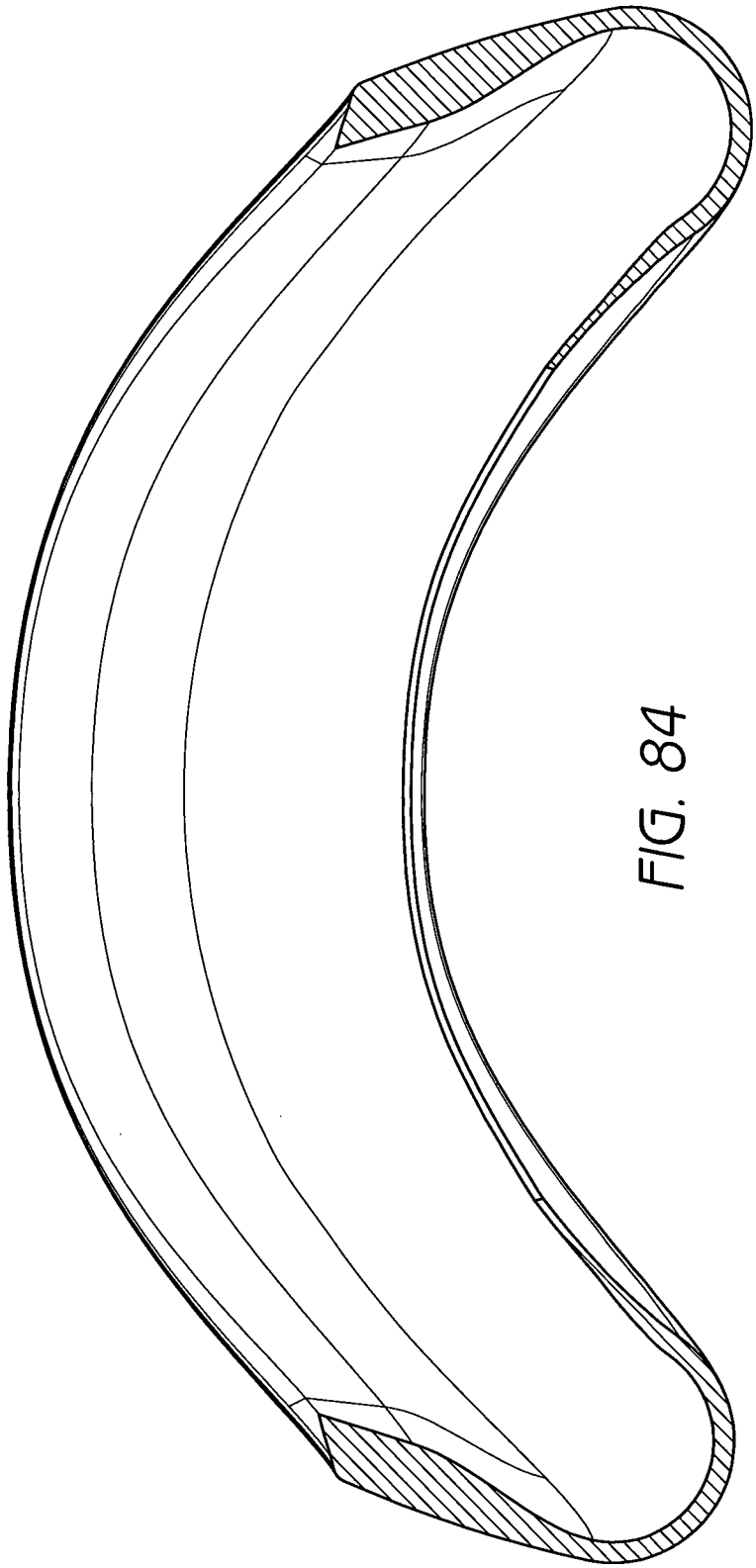

FIG. 84

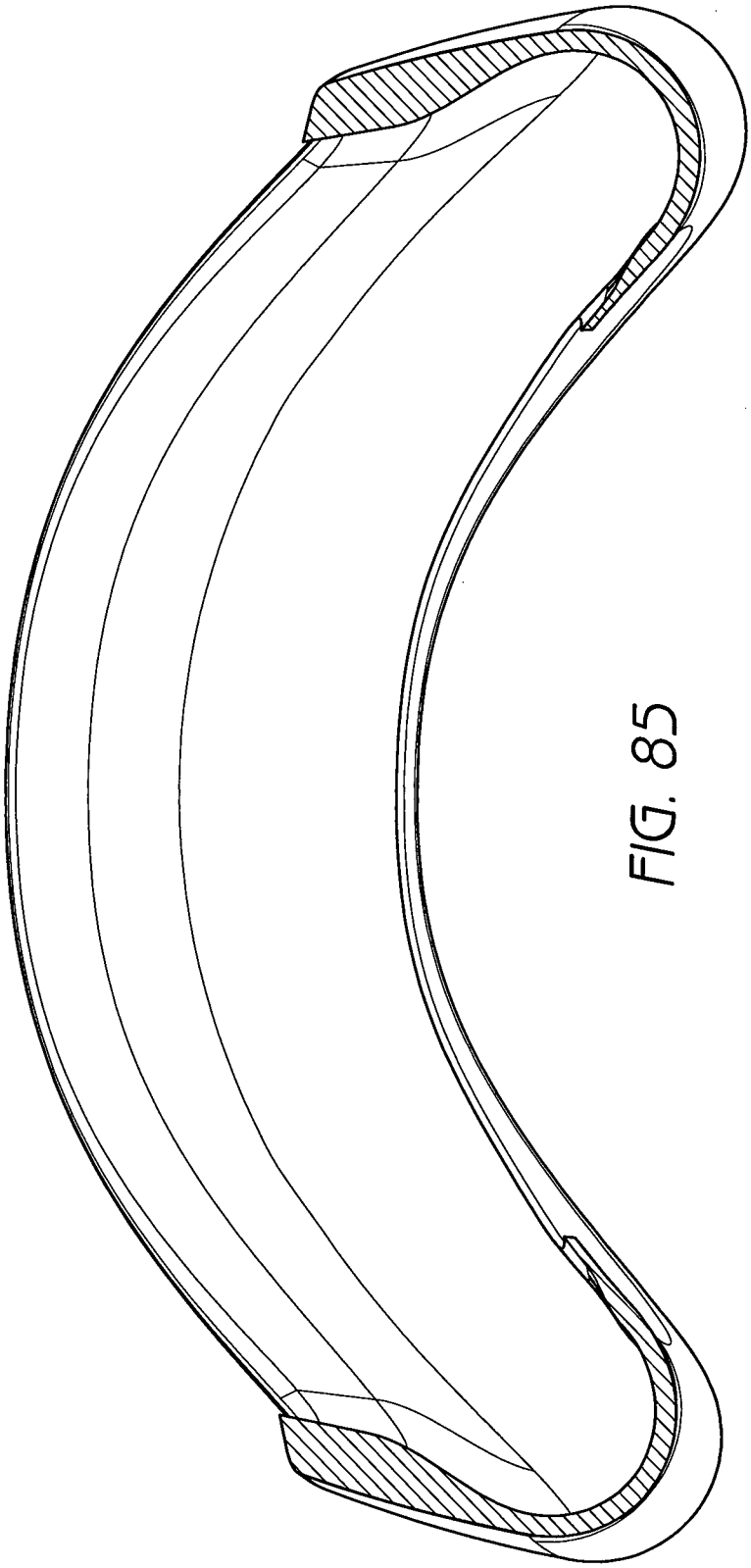

FIG. 85

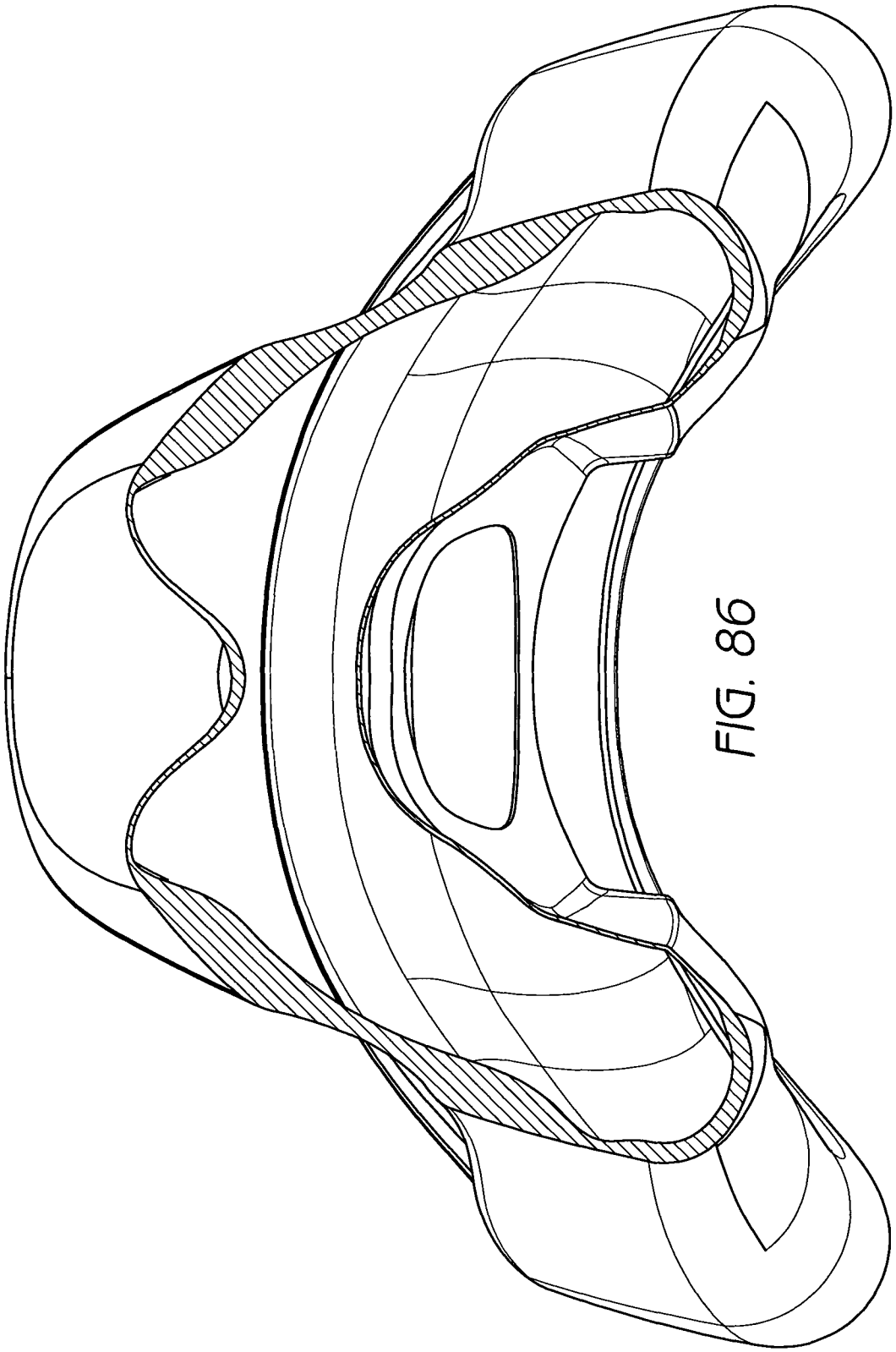

FIG. 86

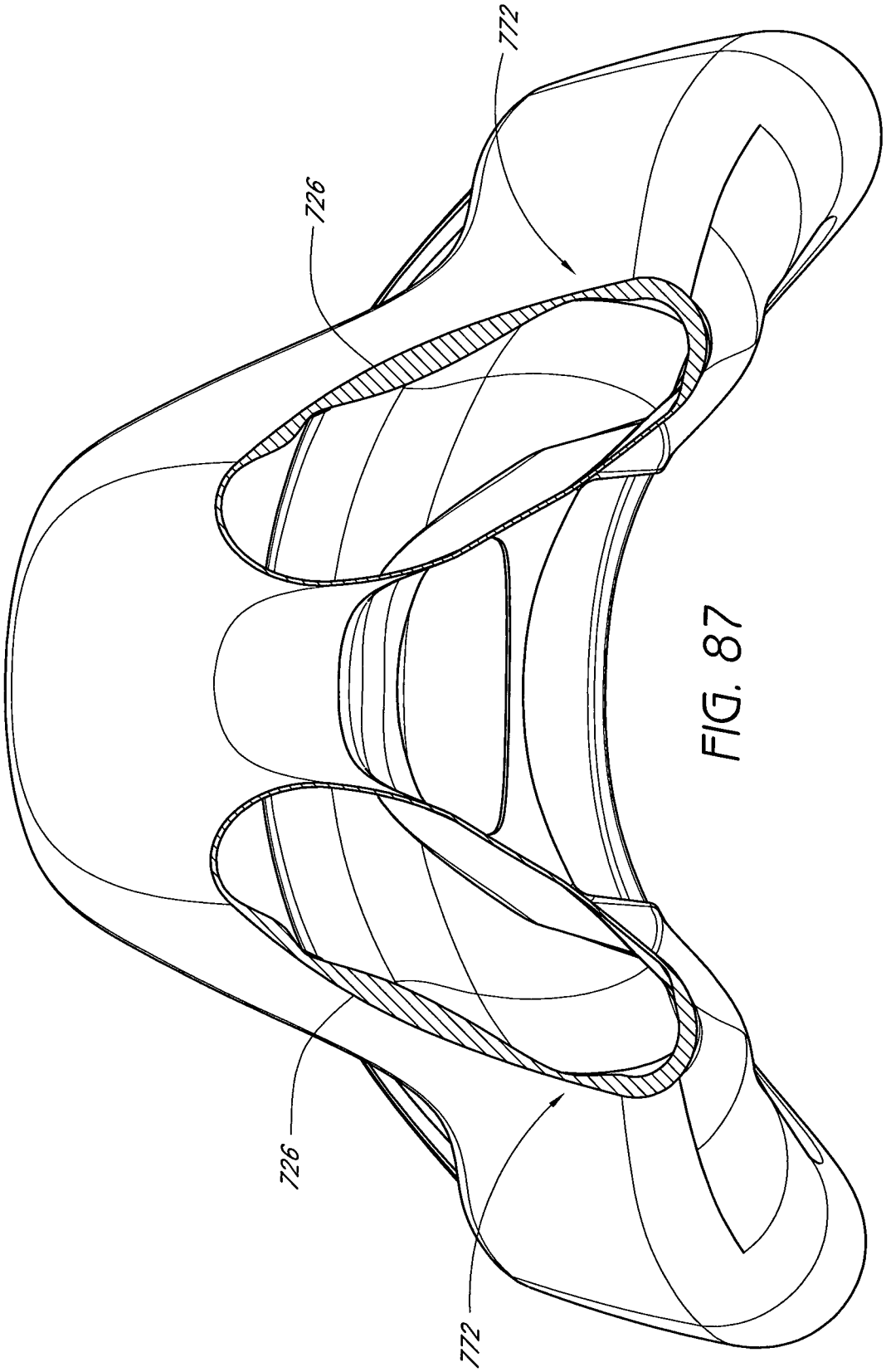

FIG. 87

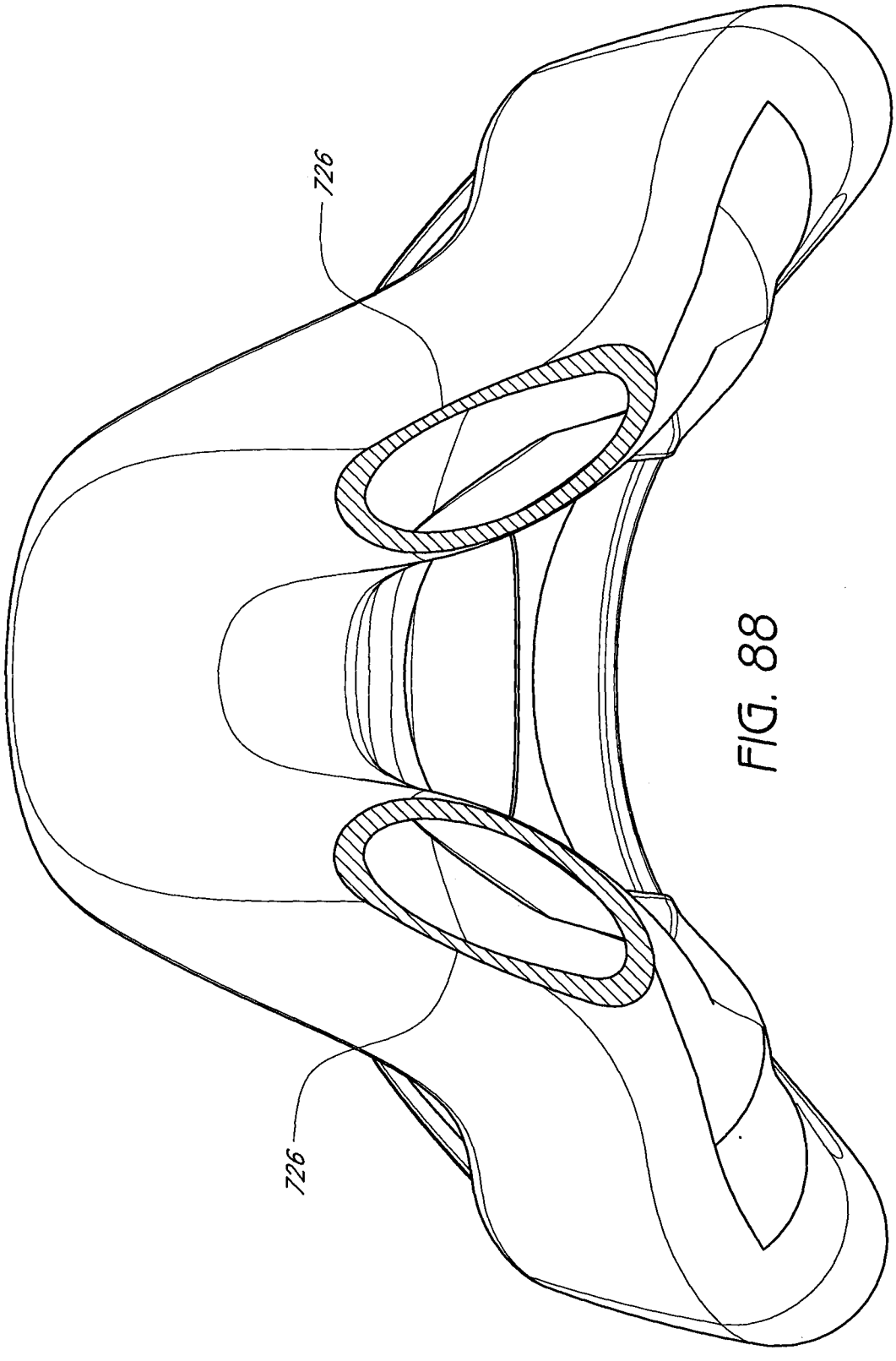

FIG. 88

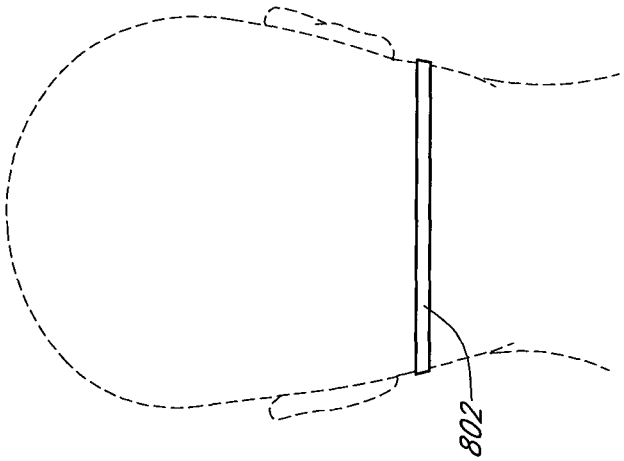

FIG. 91

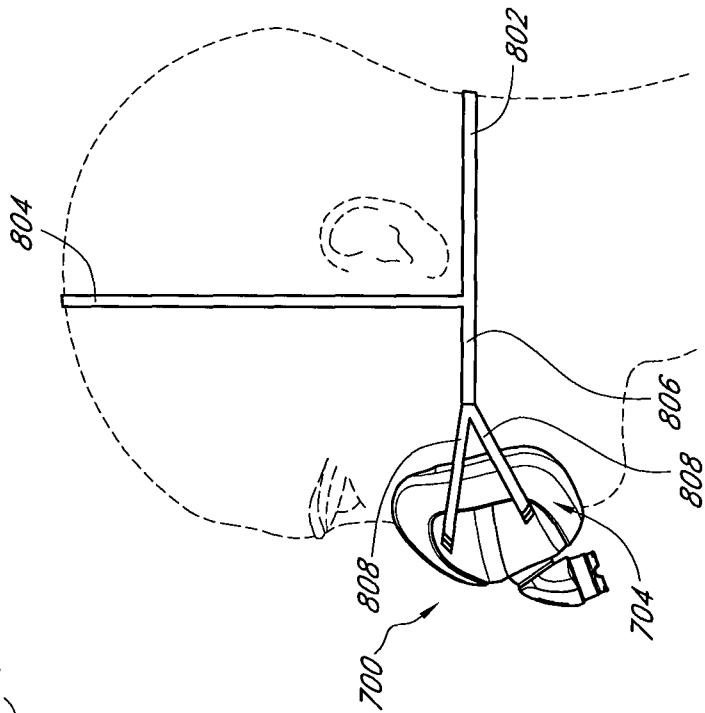

FIG. 90

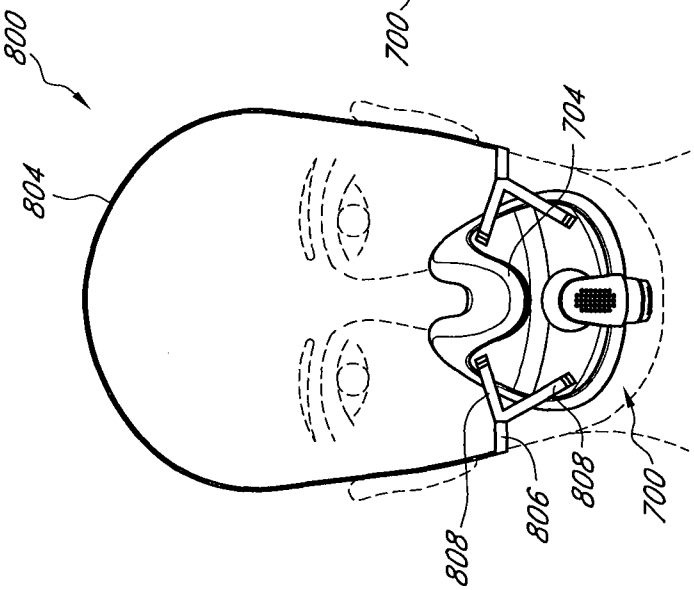

FIG. 89

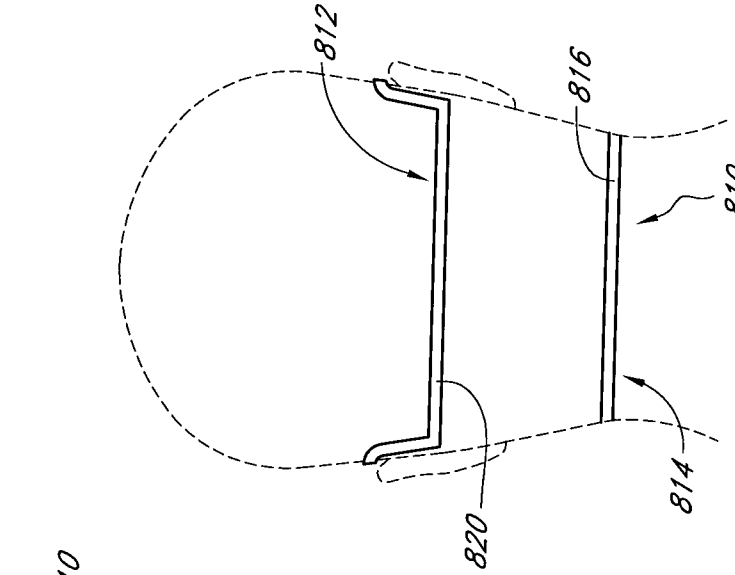

FIG. 94

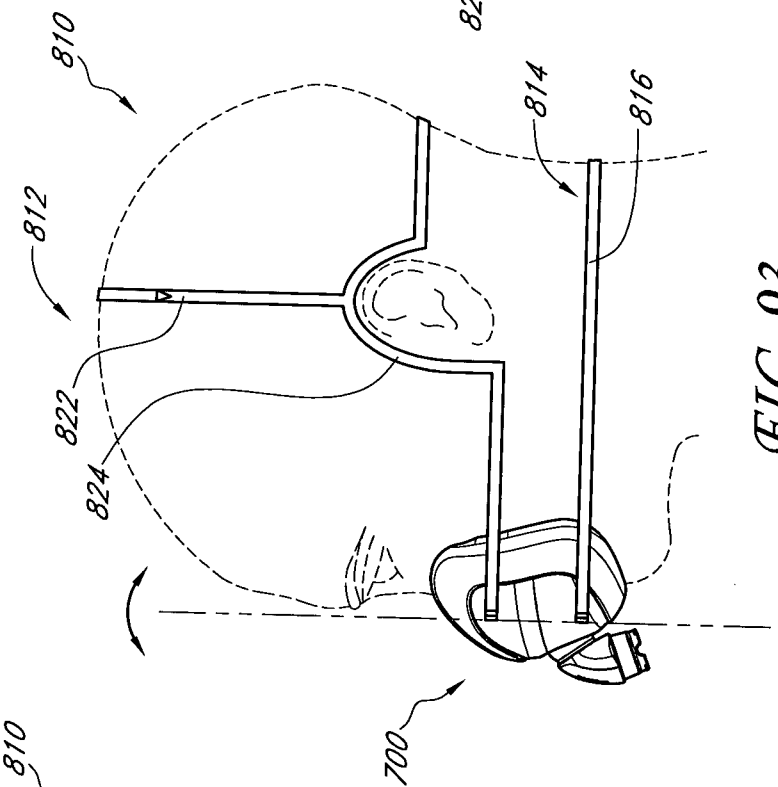

FIG. 93

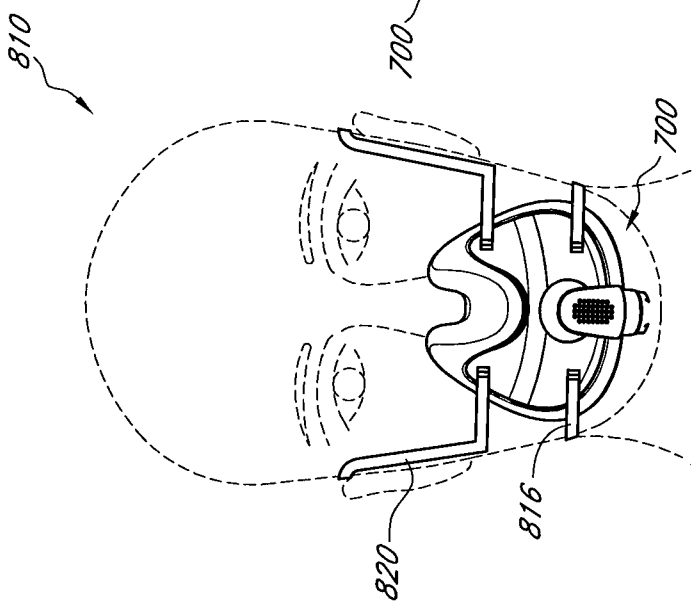

FIG. 92

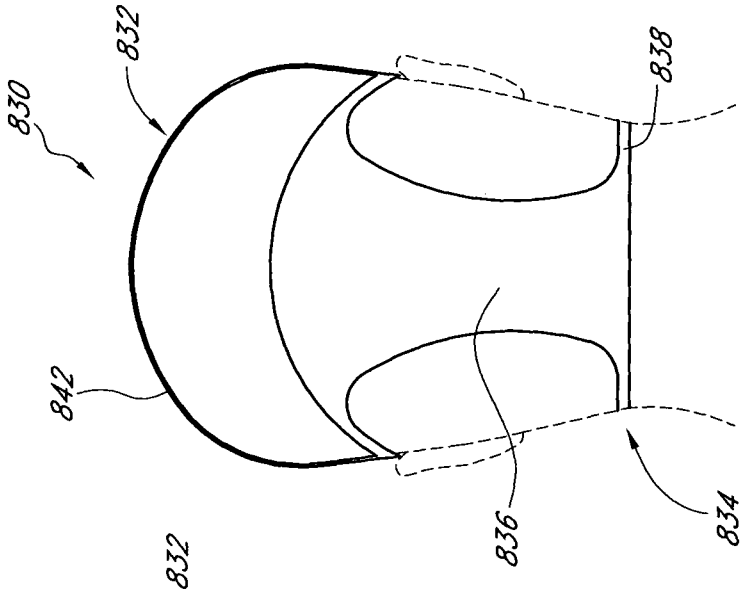

FIG. 97

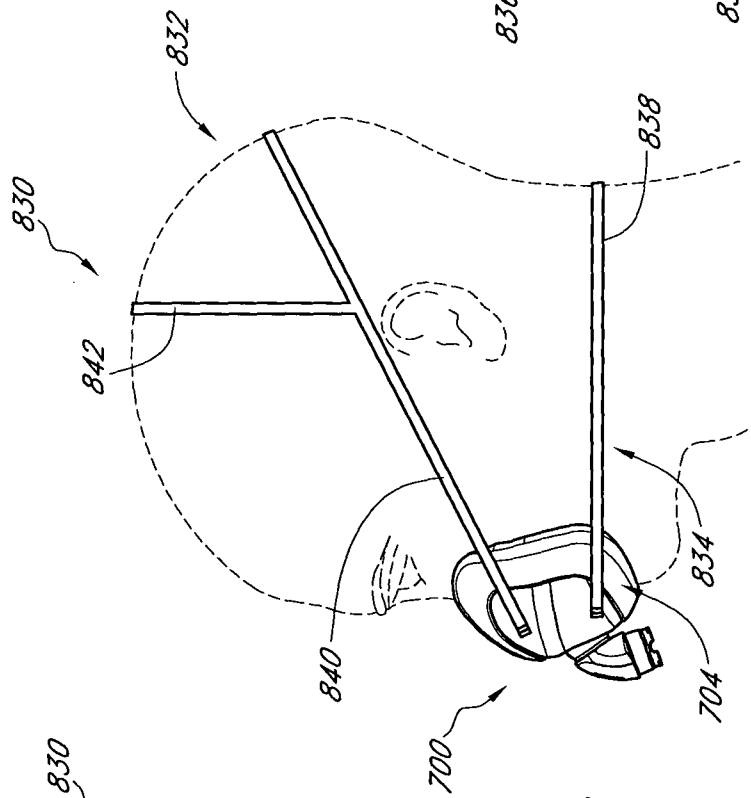

FIG. 96

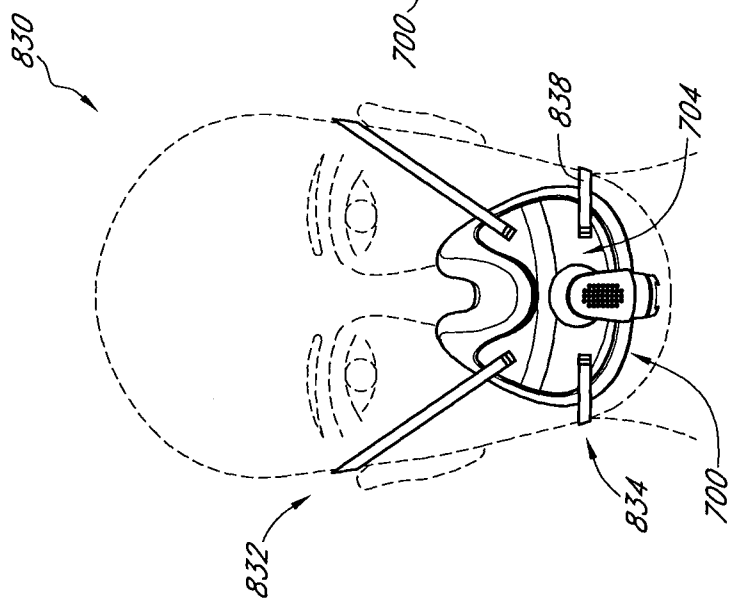

FIG. 95

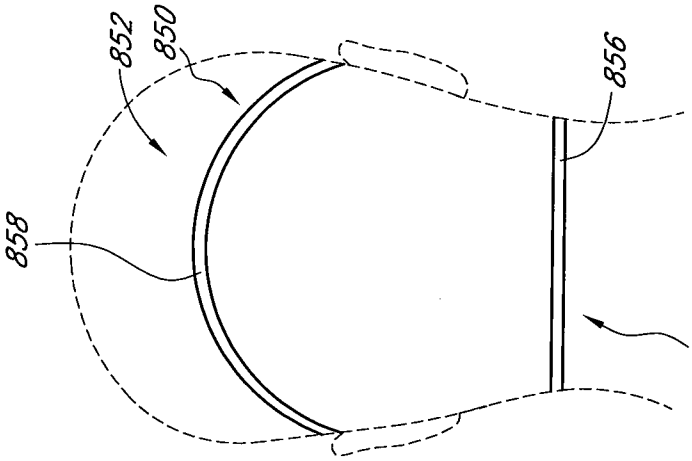

FIG. 100

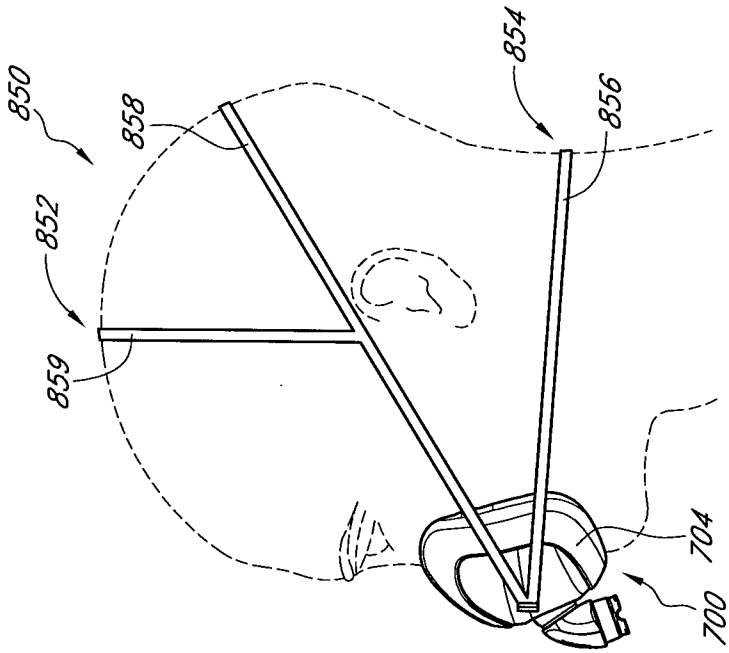

FIG. 99

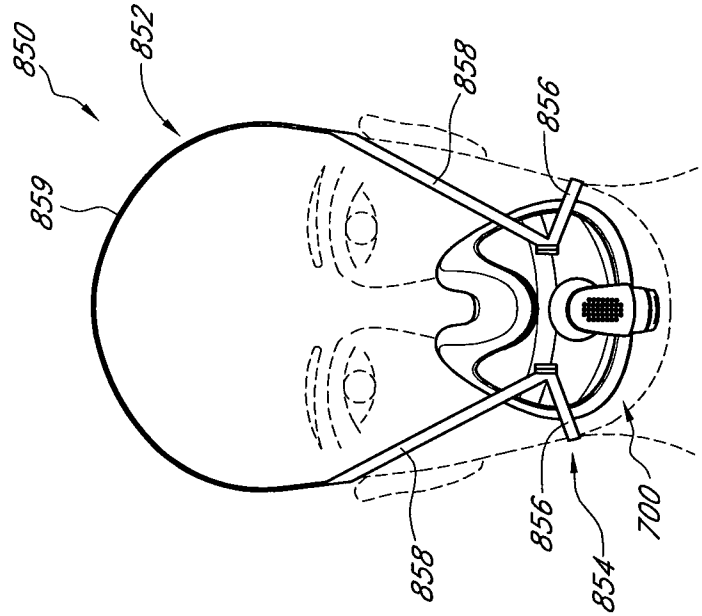

FIG. 98

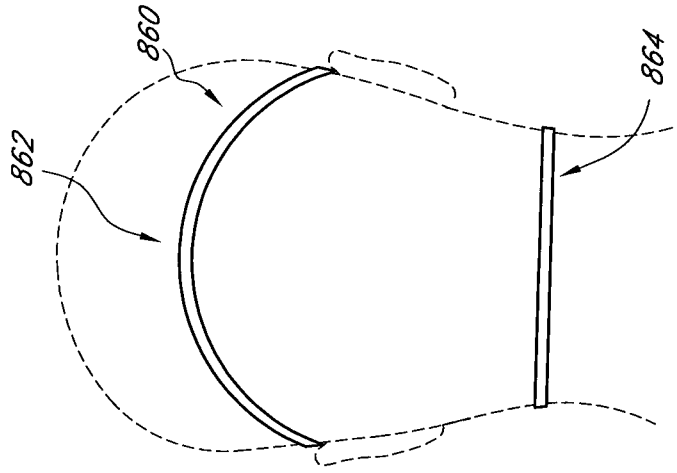

FIG. 103

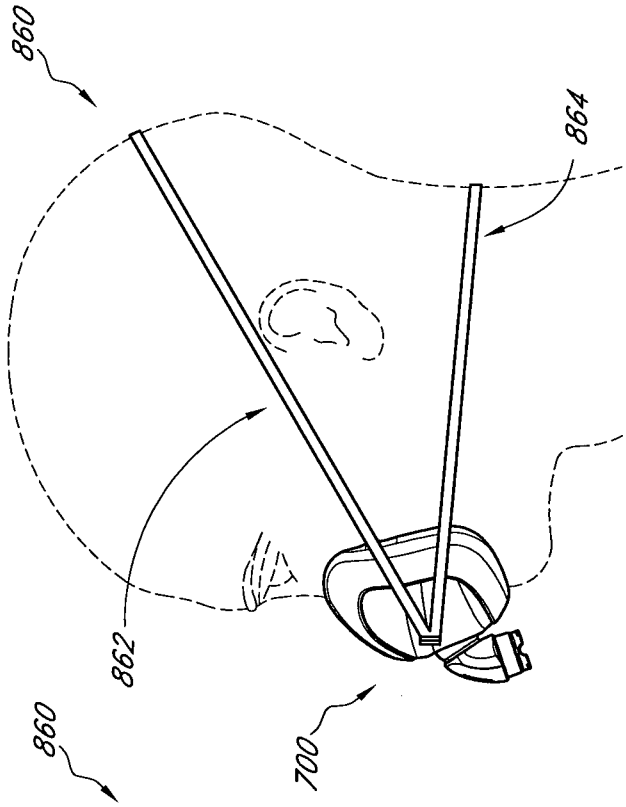

FIG. 102

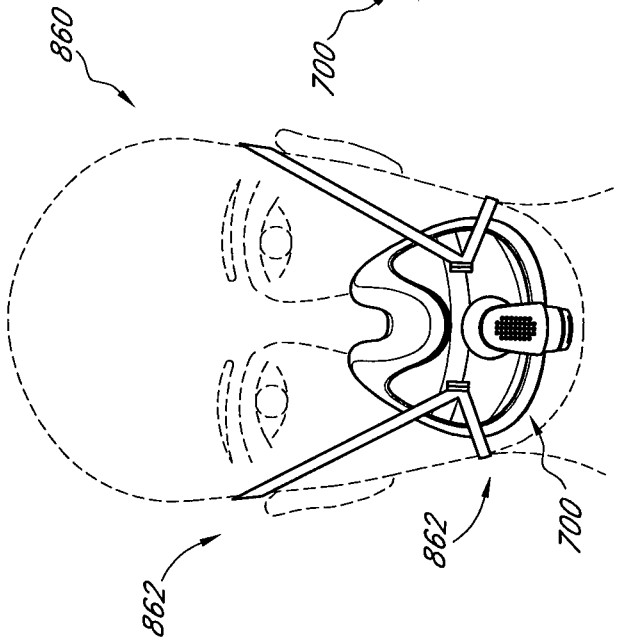

FIG. 101

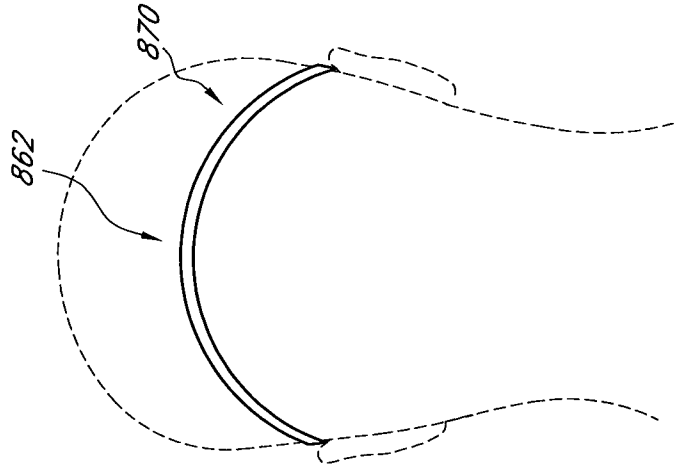

FIG. 106

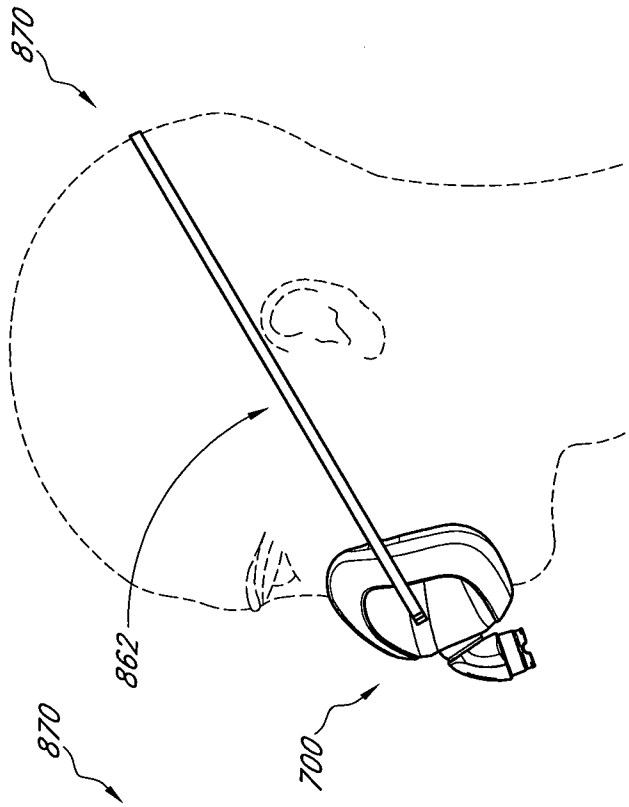

FIG. 105

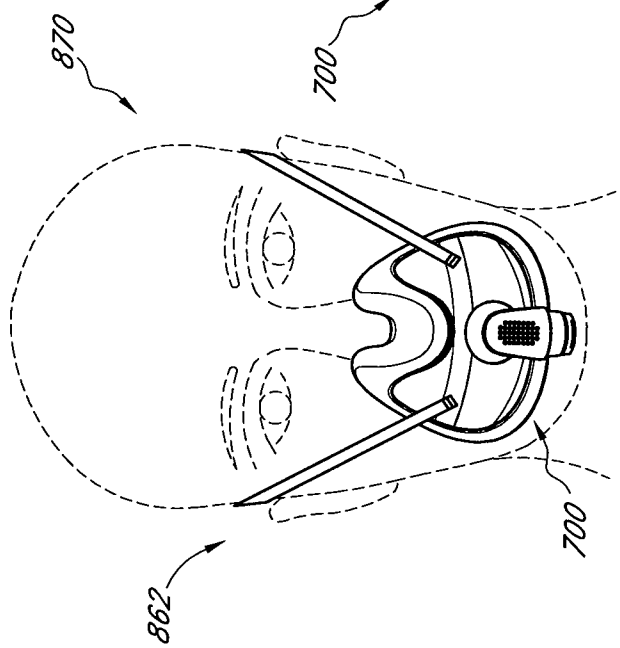

FIG. 104

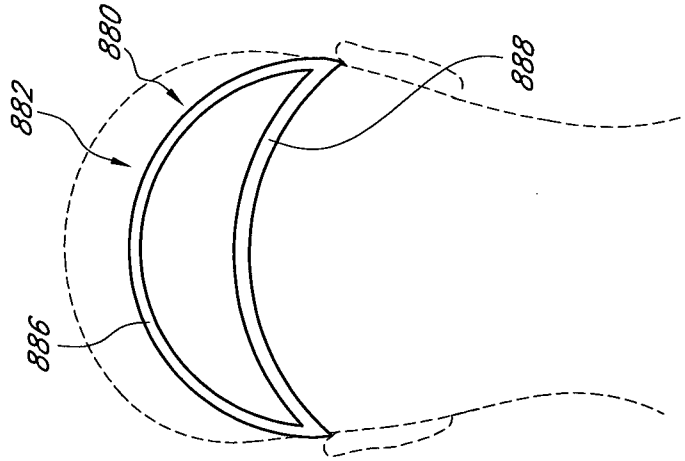

FIG. 109

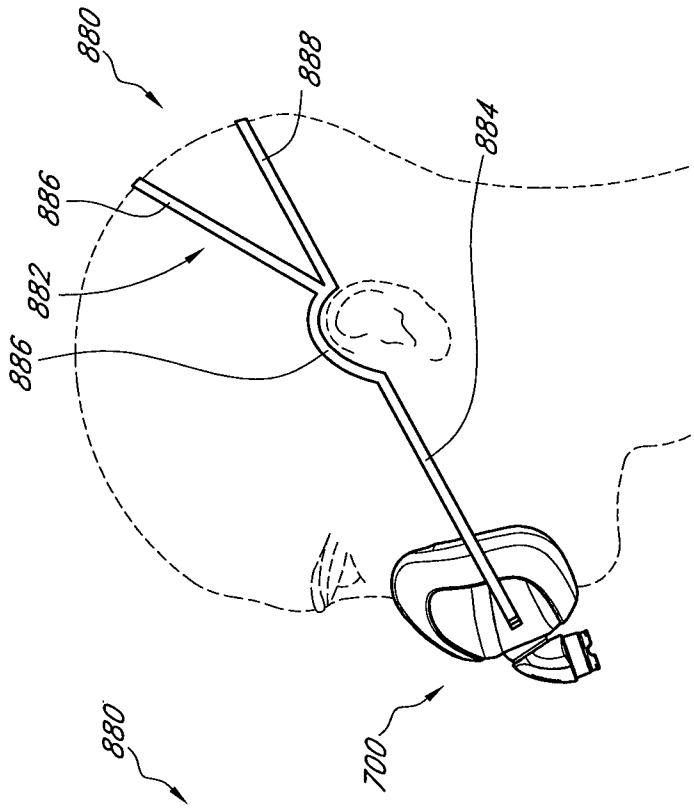

FIG. 108

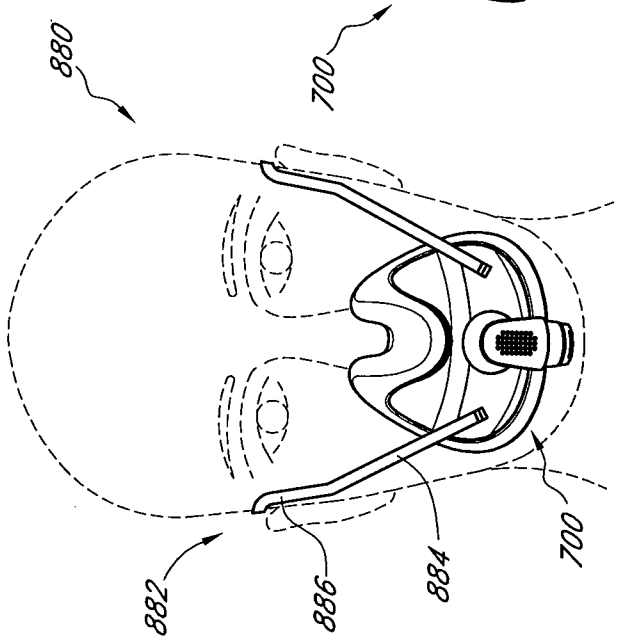

FIG. 107

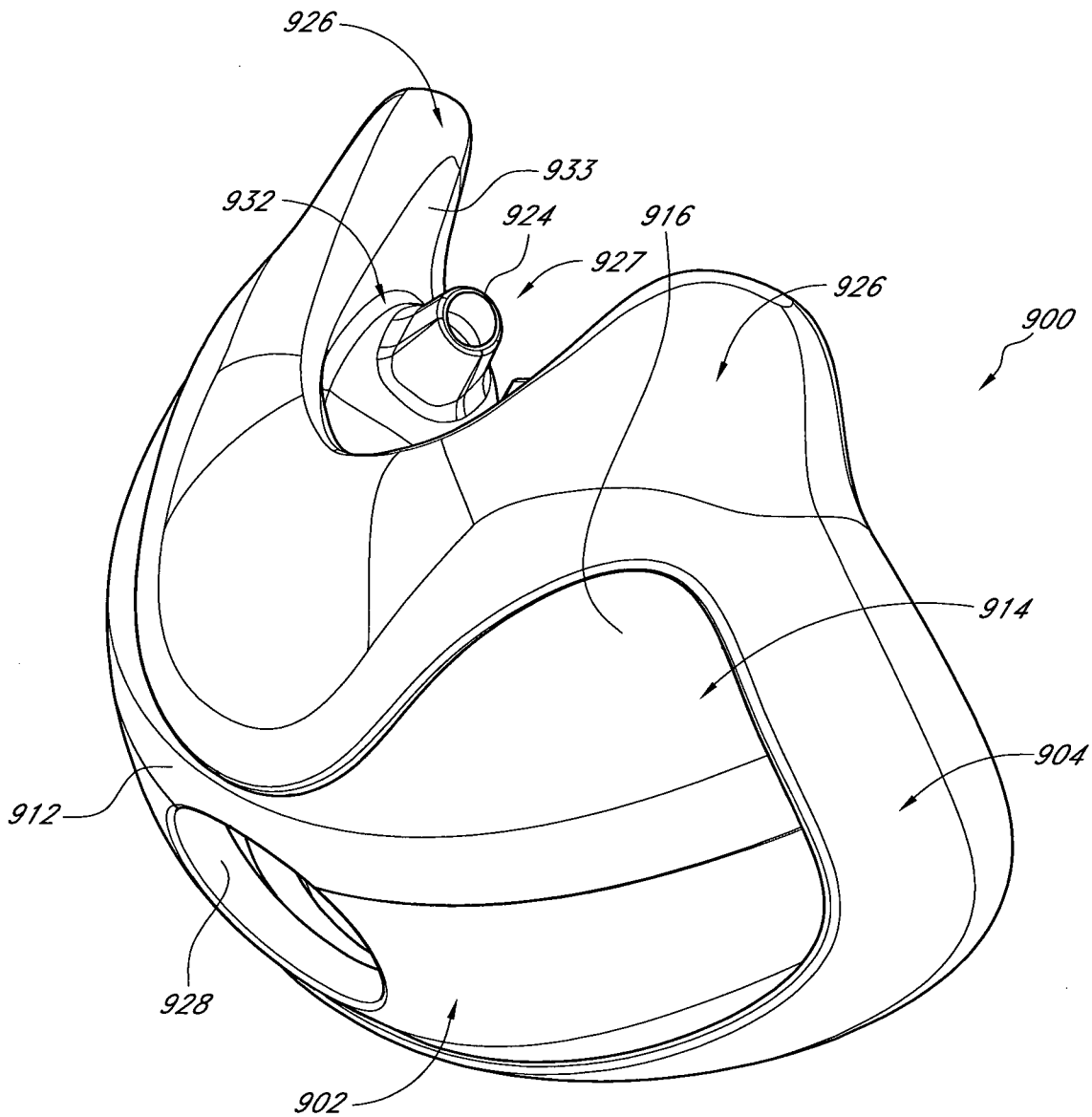

FIG. 110

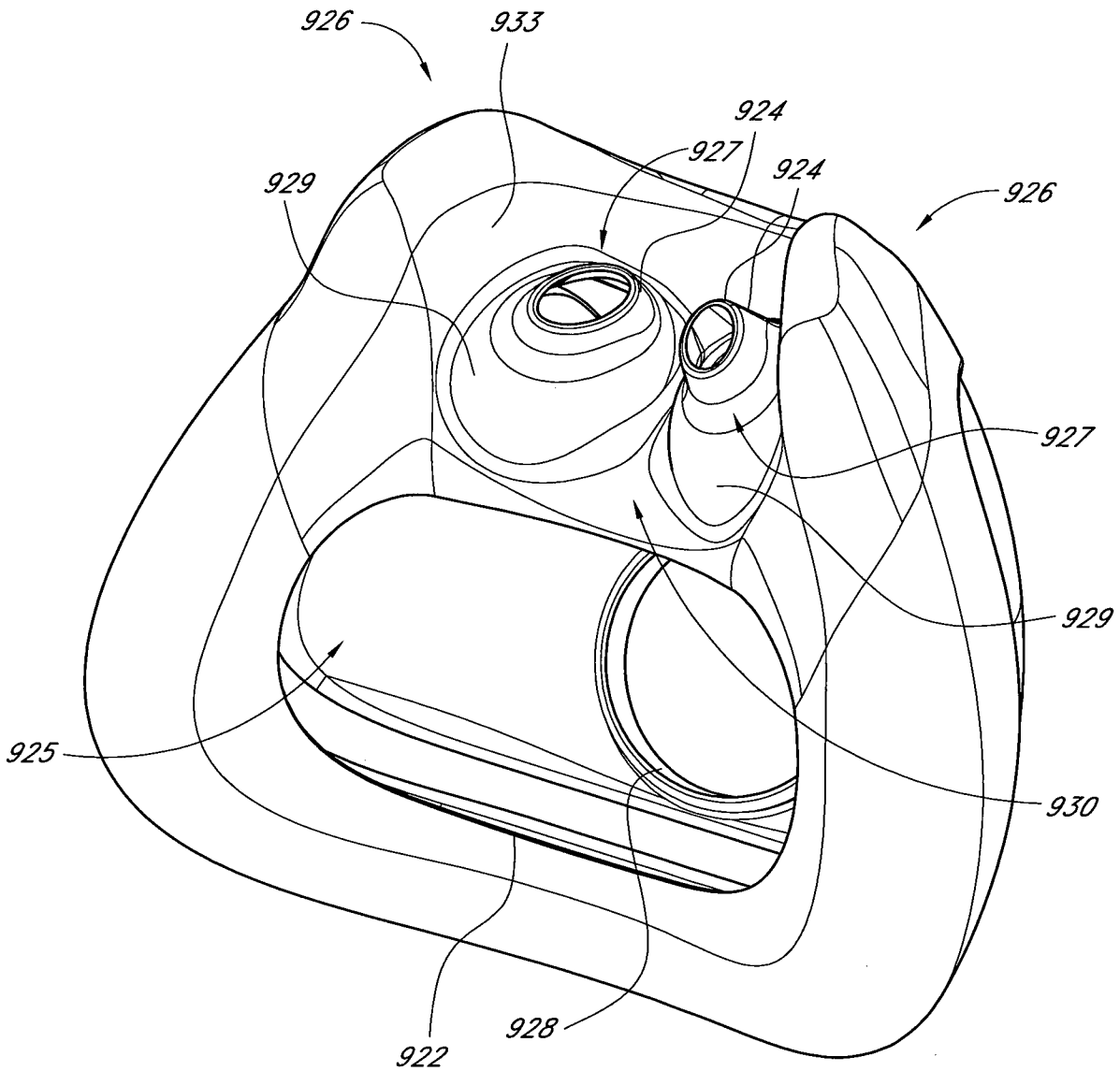

FIG. 111

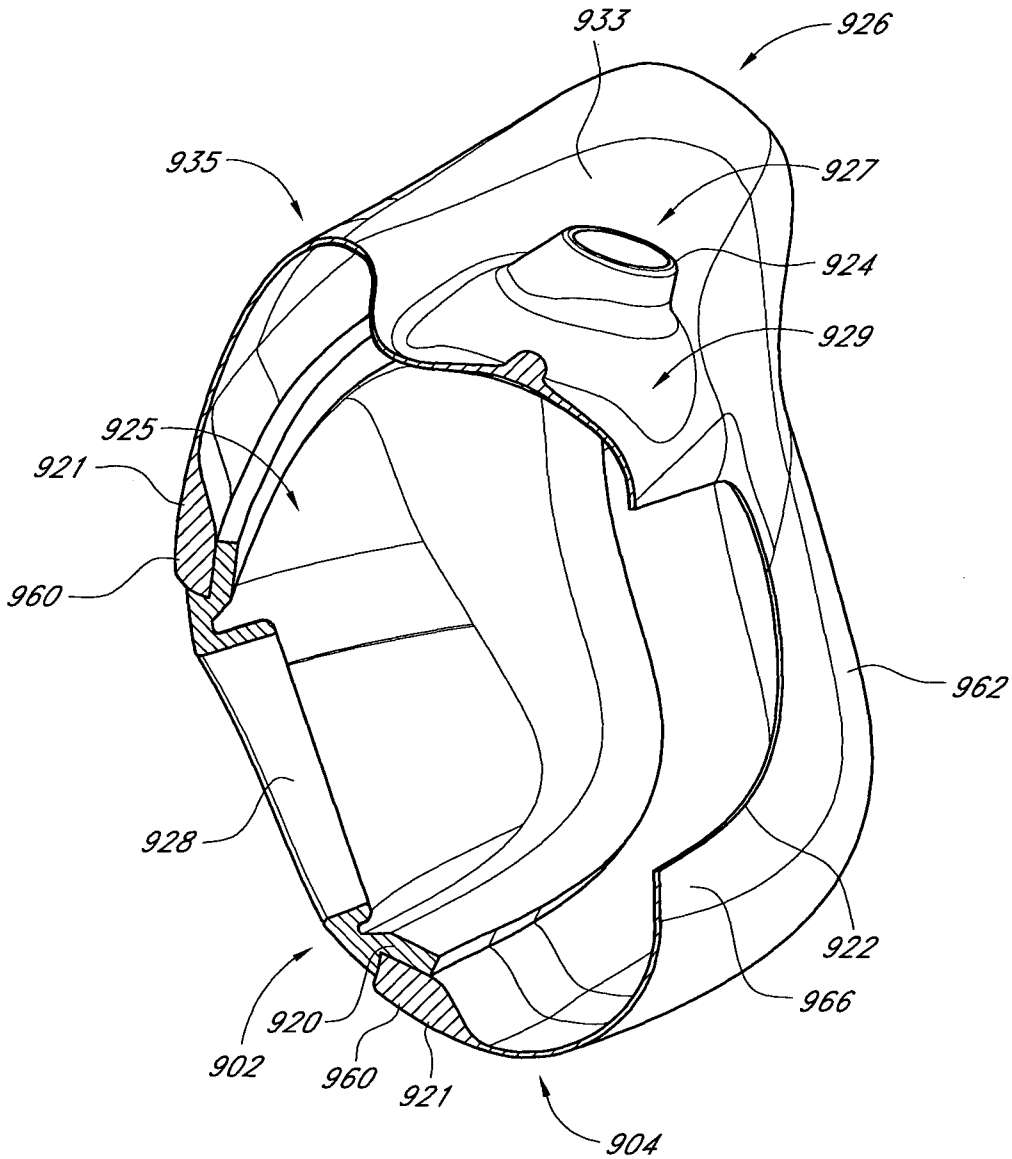
933
926
935
927
924
929
925
921
960
962
928
922
966
920
902
960
921
904

FIG. 112

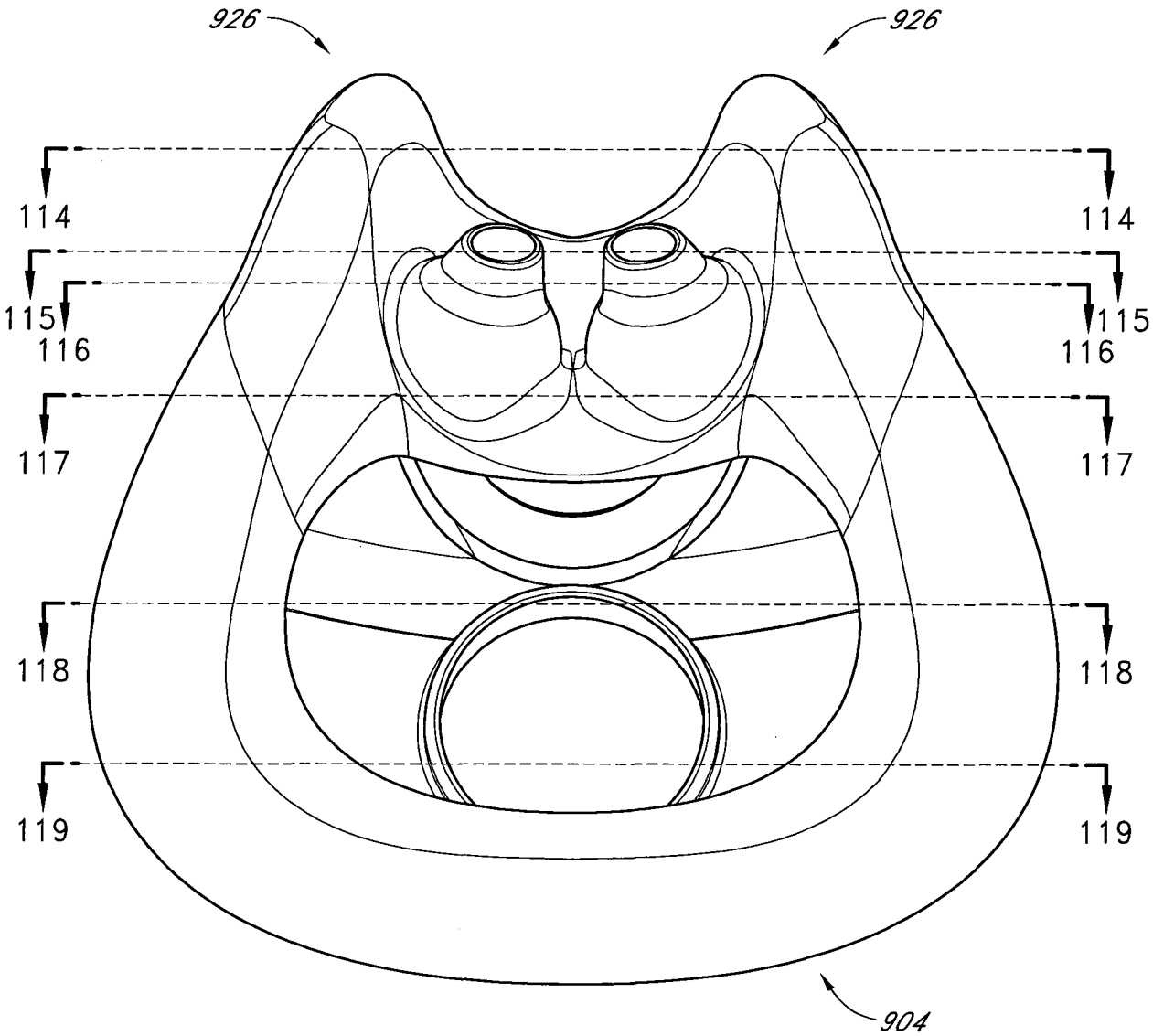

FIG. 113

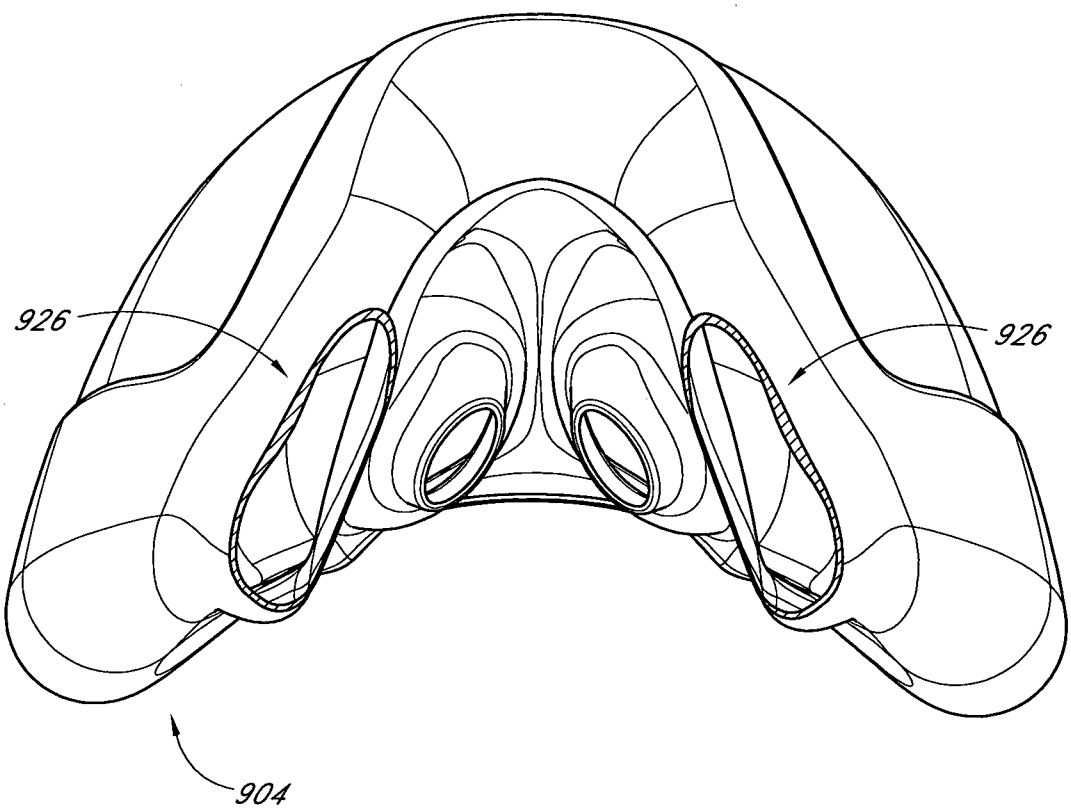

FIG. 114

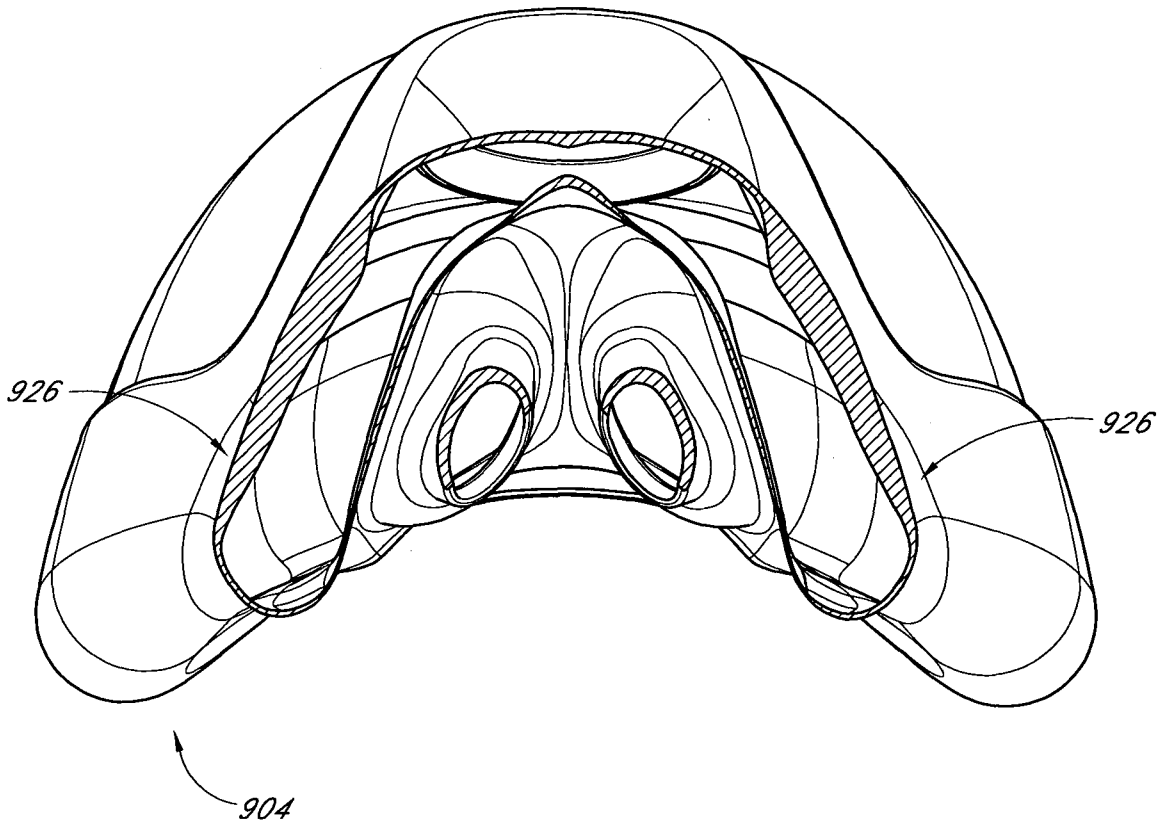

FIG. 115

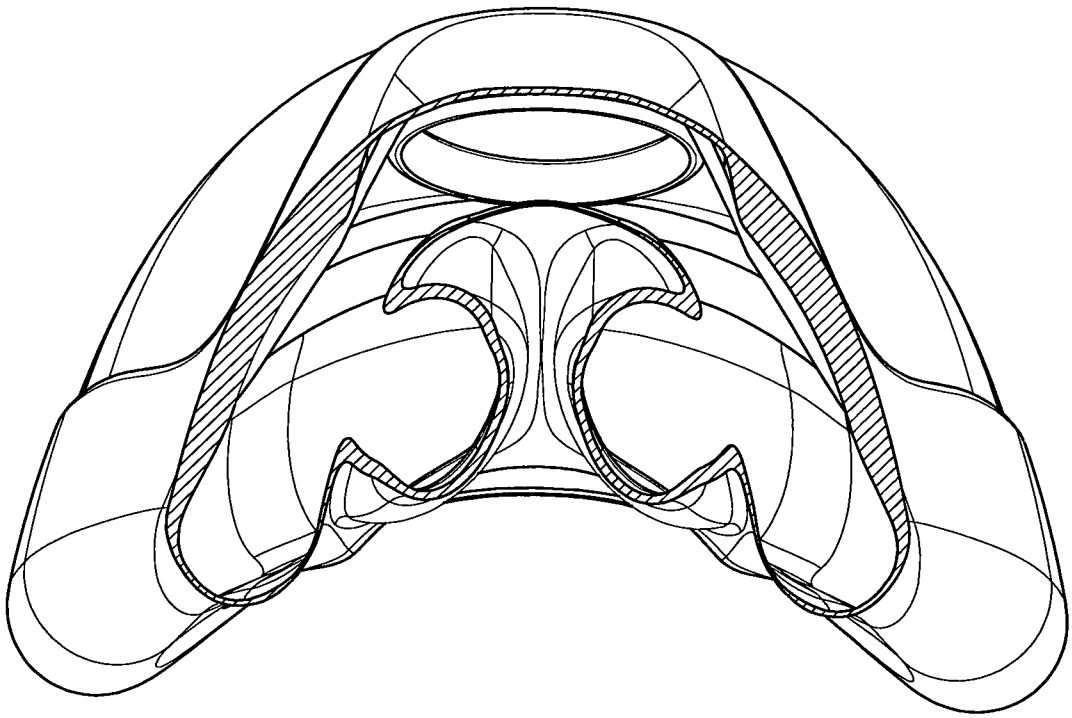

FIG. 116

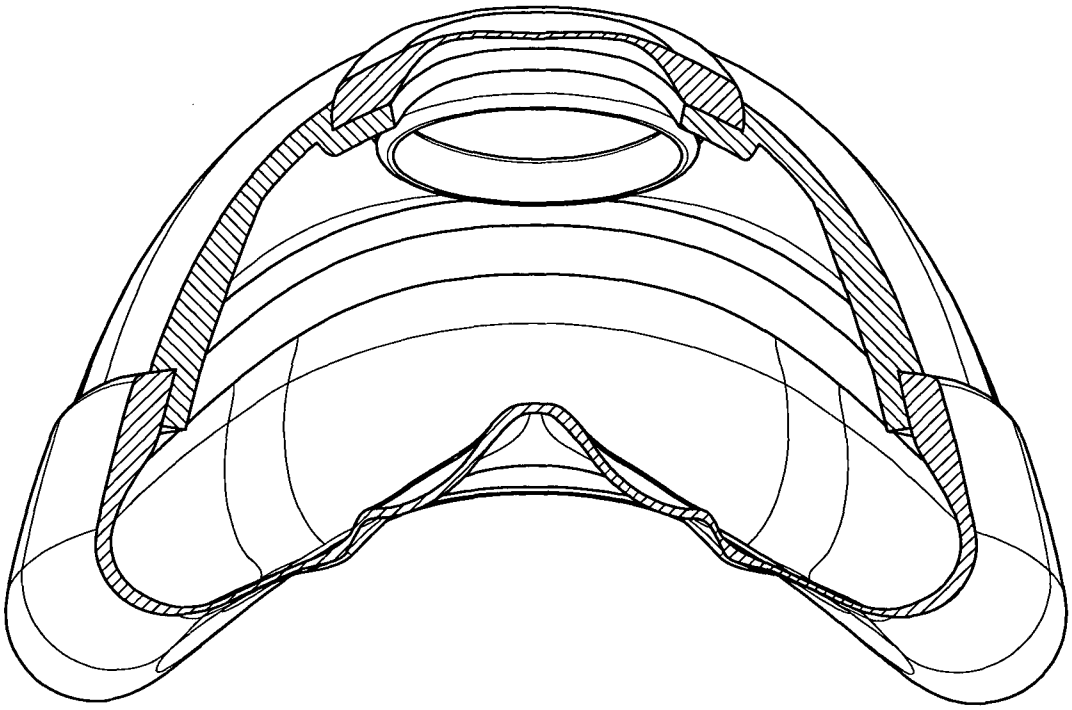

FIG. 117

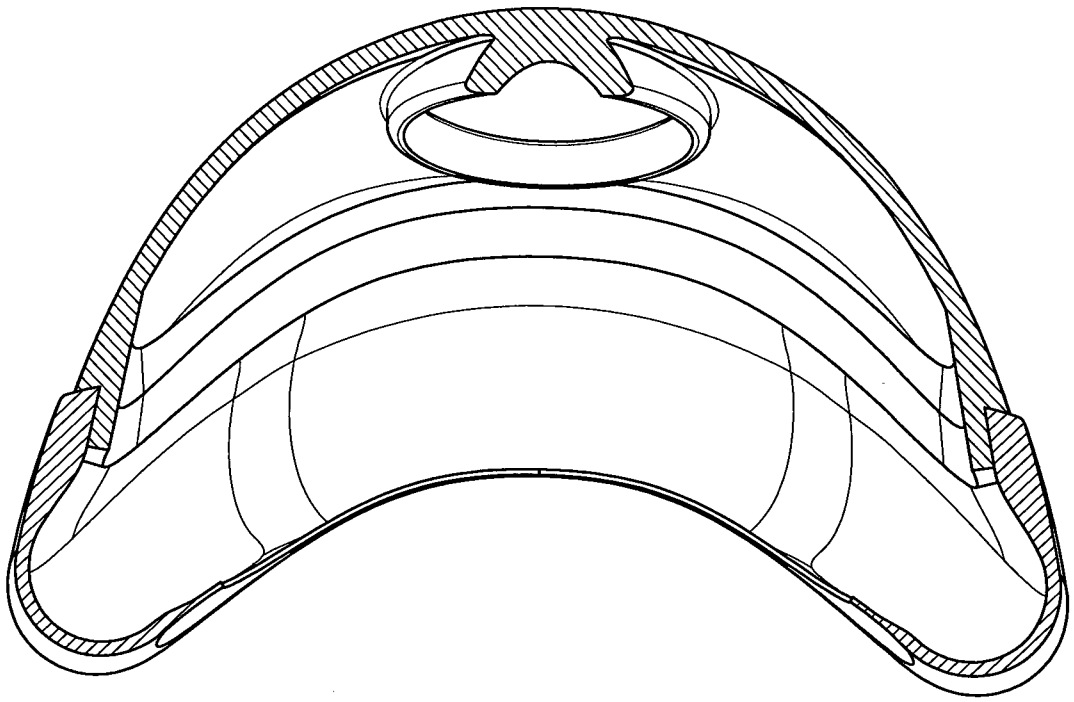

FIG. 118

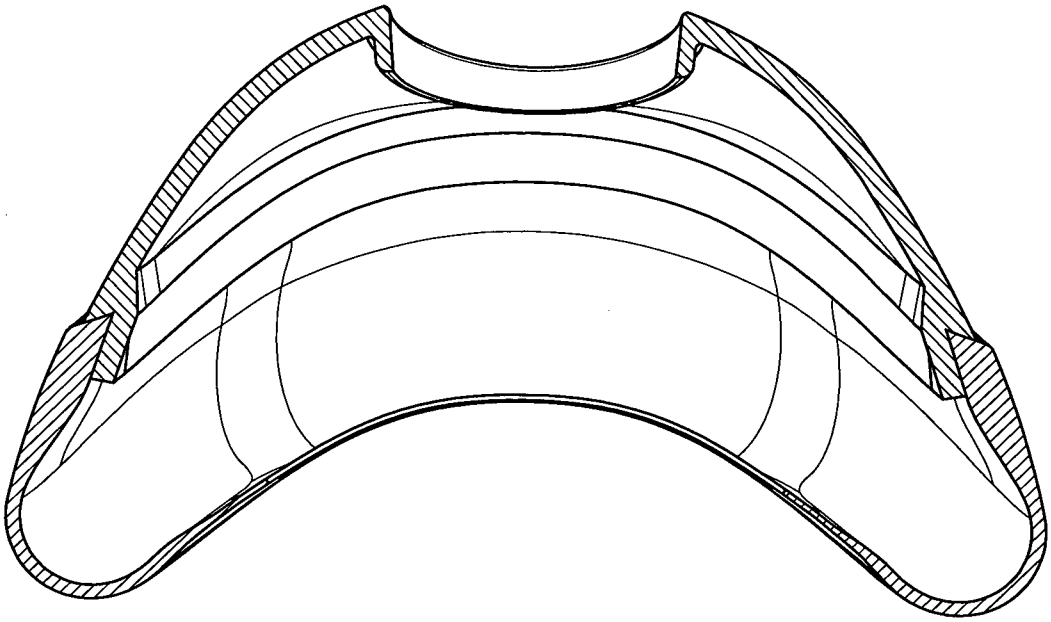

FIG. 119

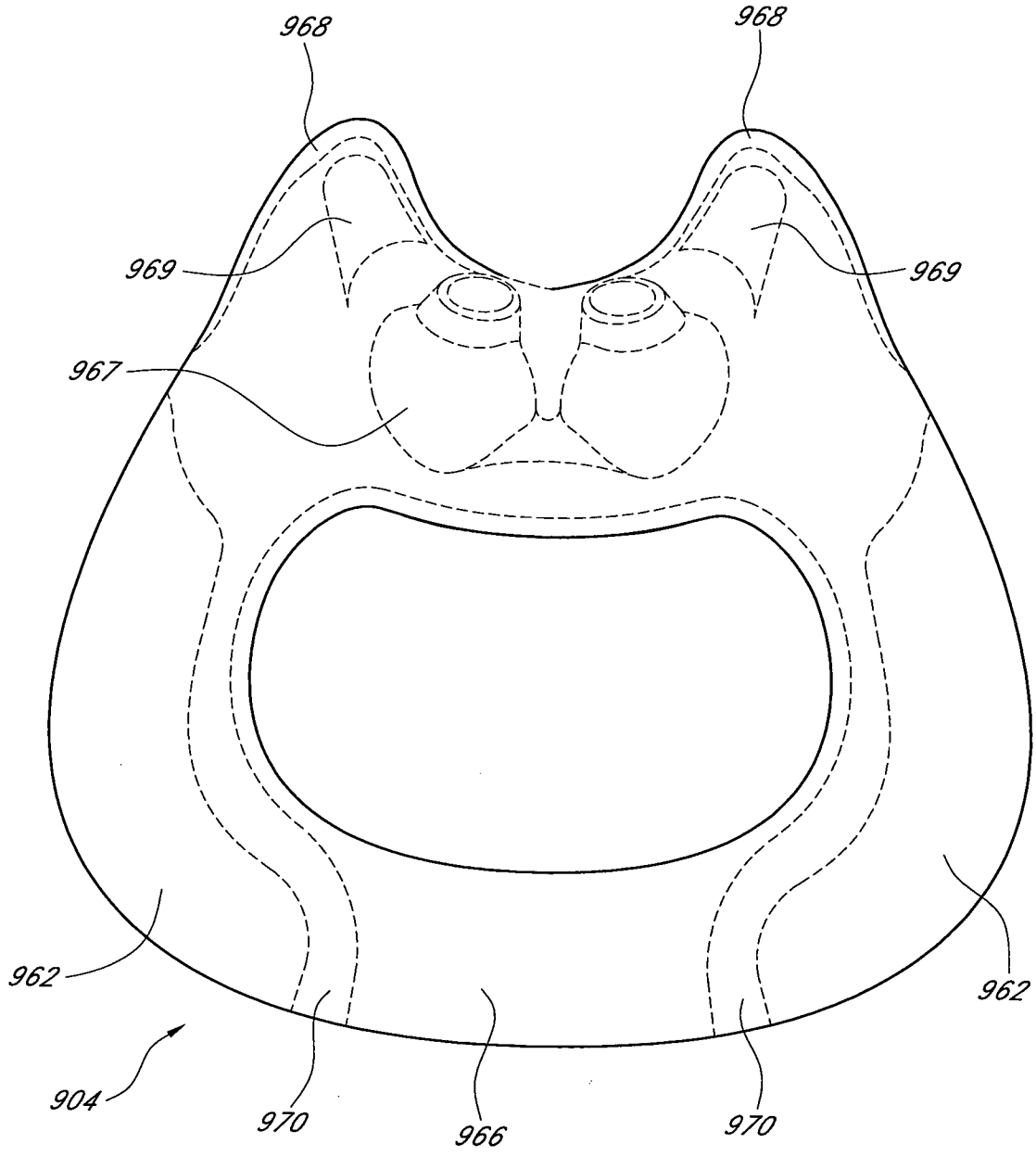

FIG. 120