Office de la Propriété Intellectuelle du Canada
Un organisme d'Industrie Canada

Canadian Intellectual Property Office
An agency of Industry Canada

CA 2825186 A1 2011/07/28

(21) 2 825 186

(12) DEMANDE DE BREVET CANADIEN
CANADIAN PATENT APPLICATION

(13) A1

(86) Date de dépôt PCT/PCT Filing Date: 2011/01/20
(87) Date publication PCT/PCT Publication Date: 2011/07/28
(85) Entrée phase nationale/National Entry: 2013/07/19
(86) N° demande PCT/PCT Application No.: US 2011/021952
(87) N° publication PCT/PCT Publication No.: 2011/091189
(30) Priorité/Priority: 2010/01/20 (US61/296,868)

(51) Cl.Int./Int.Cl. *A61B 17/04* (2006.01)
(71) Demandeur/Applicant:
NEW HOPE VENTURES, LP, US
(72) Inventeur/Inventor:
WHITMAN, MICHAEL P., US
(74) Agent: SMART & BIGGAR

(54) Titre : IMPLANT DE REPARATION DE TISSU ET DISPOSITIF ET PROCEDE DE DELIVRANCE
(54) Title: TISSUE REPAIR IMPLANT AND DELIVERY DEVICE AND METHOD

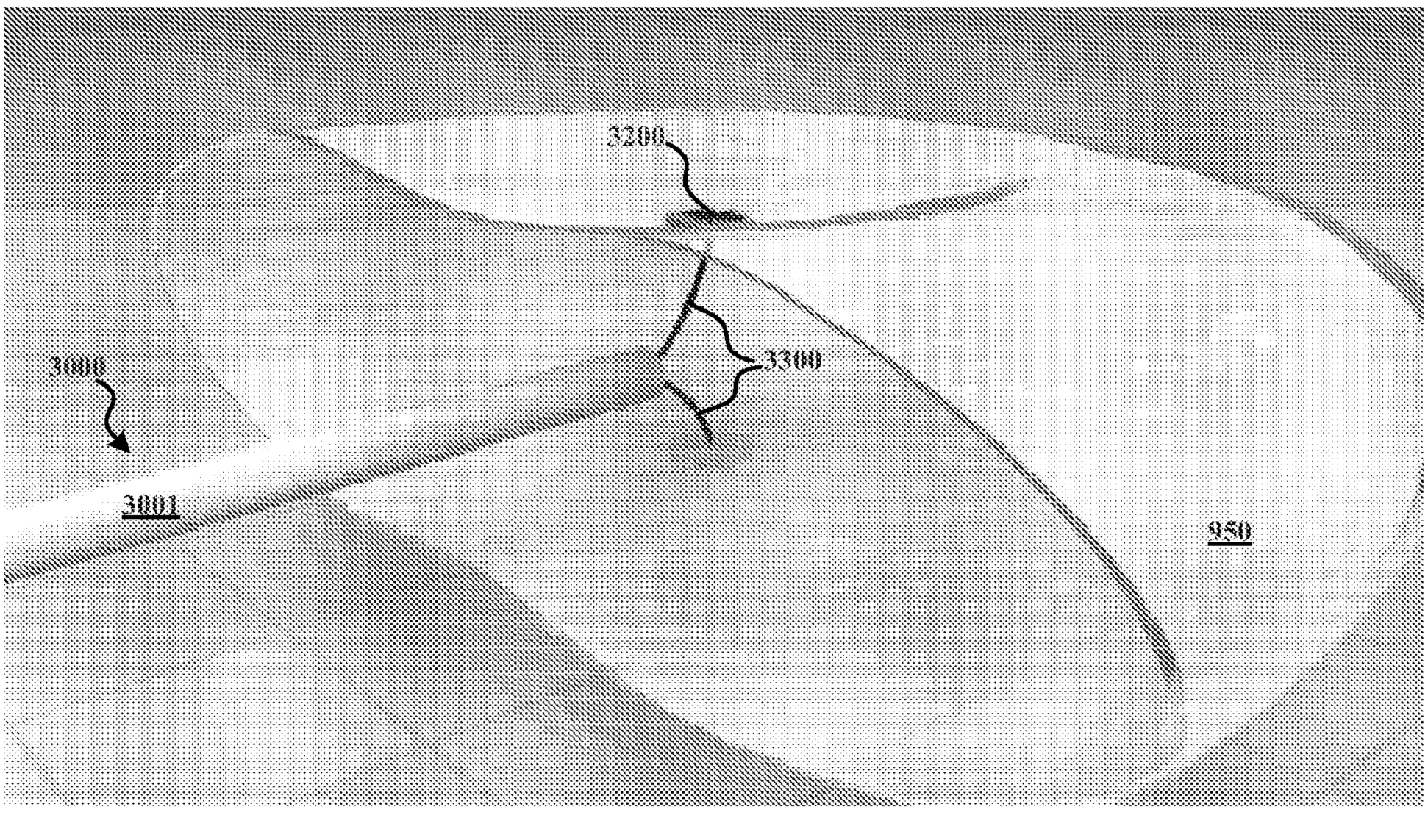

FIG. 7B

(57) Abrégé/Abstract:
A device having an implant driver configured to anchor a first implant to a first portion of tissue and to anchor a second implant to a second portion of tissue, the first and second anchors being coupled to respective first and second sutures, and a winder configured to twist the first and second sutures together as the sutures are retracted, thereby bringing the first portion of tissue into approximation with the second portion of tissue.

(12) INTERNATIONAL APPLICATION PUBLISHED UNDER THE PATENT COOPERATION TREATY (PCT)

(19) World Intellectual Property Organization
International Bureau

(43) International Publication Date
28 July 2011 (28.07.2011)

PCT

(10) International Publication Number
WO 2011/091189 A1

(51) International Patent Classification:
A61B 17/04 (2006.01)

(21) International Application Number:
PCT/US2011/021952

(22) International Filing Date:
20 January 2011 (20.01.2011)

(25) Filing Language: English

(26) Publication Language: English

(30) Priority Data:
61/296,868 20 January 2010 (20.01.2010) US

(71) Applicant *(for all designated States except US)*: **NEW HOPE VENTURES, LP** [US/US]; 1544 River Road, New Hope, PA 18938 (US).

(72) Inventor; and
(75) Inventor/Applicant *(for US only)*: **WHITMAN, Michael, P.** [US/US]; 1544 River Road, New Hope, PA 18938 (US).

(74) Agents: **ULRICH, Clifford, A.** et al.; Kenyon & Kenyon LLP, One Broadway, New York, NY 10004 (US).

(81) Designated States *(unless otherwise indicated, for every kind of national protection available)*: AE, AG, AL, AM, AO, AT, AU, AZ, BA, BB, BG, BH, BR, BW, BY, BZ, CA, CH, CL, CN, CO, CR, CU, CZ, DE, DK, DM, DO, DZ, EC, EE, EG, ES, FI, GB, GD, GE, GH, GM, GT, HN, HR, HU, ID, IL, IN, IS, JP, KE, KG, KM, KN, KP, KR, KZ, LA, LC, LK, LR, LS, LT, LU, LY, MA, MD, ME, MG, MK, MN, MW, MX, MY, MZ, NA, NG, NI, NO, NZ, OM, PE, PG, PH, PL, PT, RO, RS, RU, SC, SD, SE, SG, SK, SL, SM, ST, SV, SY, TH, TJ, TM, TN, TR, TT, TZ, UA, UG, US, UZ, VC, VN, ZA, ZM, ZW.

(84) Designated States *(unless otherwise indicated, for every kind of regional protection available)*: ARIPO (BW, GH, GM, KE, LR, LS, MW, MZ, NA, SD, SL, SZ, TZ, UG, ZM, ZW), Eurasian (AM, AZ, BY, KG, KZ, MD, RU, TJ, TM), European (AL, AT, BE, BG, CH, CY, CZ, DE, DK, EE, ES, FI, FR, GB, GR, HR, HU, IE, IS, IT, LT, LU, LV, MC, MK, MT, NL, NO, PL, PT, RO, RS, SE, SI, SK, SM, TR), OAPI (BF, BJ, CF, CG, CI, CM, GA, GN, GQ, GW, ML, MR, NE, SN, TD, TG).

Published:

— *with international search report (Art. 21(3))*

(54) Title: TISSUE REPAIR IMPLANT AND DELIVERY DEVICE AND METHOD

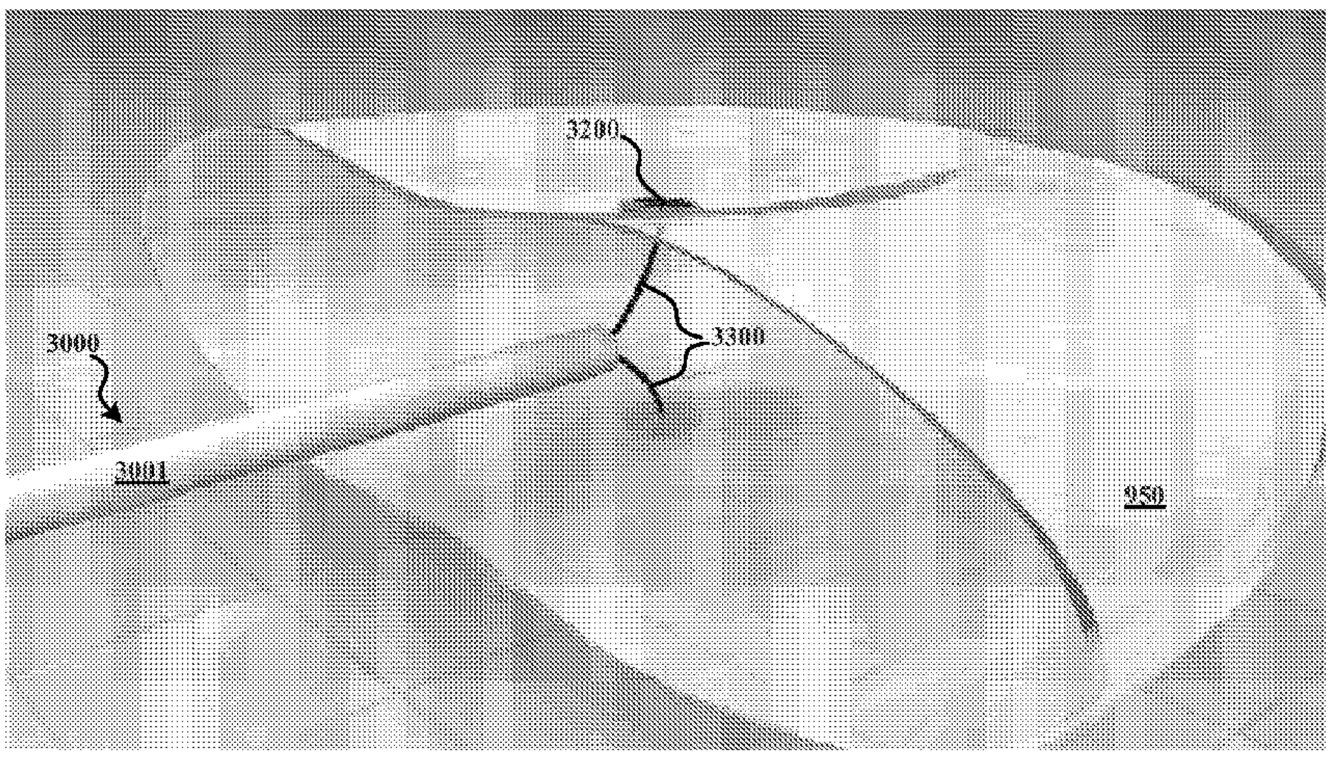

FIG. 7B

(57) Abstract: A device having an implant driver configured to anchor a first implant to a first portion of tissue and to anchor a second implant to a second portion of tissue, the first and second anchors being coupled to respective first and second sutures, and a winder configured to twist the first and second sutures together as the sutures are retracted, thereby bringing the first portion of tissue into approximation with the second portion of tissue.

WO 2011/091189 A1

TISSUE REPAIR IMPLANT AND DELIVERY DEVICE AND METHOD

CROSS-REFERENCE TO RELATED APPLICATIONS

This application claims the benefit of U.S. Provisional Patent Application Serial No. 61/296,868, filed on January 20, 2010, which is expressly incorporated herein in its entirety by reference thereto.

Further, each of the following is hereby incorporated in its entirety by reference thereto: U.S. Patent Application Serial No. _____, Attorney Docket No. 14895/3, filed on January 20, 2011, U.S. Patent Application Serial No. _____, Attorney Docket No. 14895/5, filed on January 20, 2011; and U.S. Patent Application Serial No. _____, Attorney Docket No. 14895/6, filed on January 20, 2011.

FIELD OF THE INVENTION

The present invention relates to a tissue implant and delivery device and method.

BACKGROUND INFORMATION

Some surgical interventions require the approximation of a first tissue and a second tissue. Known devices for drawing two tissues toward each other require instrument access to the outer surfaces of the tissues being brought toward each other. For example, where the two tissues are part of the same organ, these instruments require access from the outside of an organ where the tissues are part of the same organ. This may lead to trauma to surrounding tissues and increase the risk of infection. Thus, there is a need for a less invasive device and method for approximating two tissues.

Moreover, there is a need for a tissue approximation mechanism and method that is simple to operate and only requires access to the space between the tissues being approximated. Further, there is a need for a reliable tissue approximating mechanism that may be precisely implemented.

Further, there is a need for a mechanism and method that reduces procedural costs and allows access to difficult-to-reach locations of the anatomy.

SUMMARY

According to example embodiments of the present invention, a surgical device comprises an implant driver configured to anchor a first implant to a first portion of tissue

and to anchor a second implant to a second portion of tissue, the first and second anchors being coupled to respective first and second sutures, and a winder configured to twist the first and second sutures together as the sutures are retracted, thereby bringing the first portion of tissue into approximation with the second portion of tissue.

The implant driver may be configured to anchor the implants by using a hydraulic driver. The hydraulic driver may use saline as a hydraulic fluid.

The device may further comprise a clamping element configured to clamp together the sutures after the winding. The clamping element may be further configured to trim the an excess length of each suture disposed proximally to a location of the clamping.

The first implant and/or second implant may be a fastener having a plurality of anchoring filaments configured to resist retraction of the fastener from the first portion of tissue.

At least one of the implants may be a fastener having a plurality of wings configured to resist retraction of the fastener from the first portion of tissue.

At least one of the implants may be a self-expanding anchor.

At least one of the implants may be disk-shaped.

The self-expanding anchor may include a plurality of tissue- piercing teeth configured to penetrate the entire thickness of the first portion of tissue.

According to example embodiments of the present invention, a surgical device comprises a hollow needle having an inner chamber and a sharp tip configured to pierce a tissue, a first self-expanding anchor having a collapsed position and an expanded position, the first anchor being positionable within the inner chamber when in the collapsed position, a first suture extending through the needle and attached to the first anchor, and an actuator configured to drive the needle containing the first anchor into a first predetermined position in a first portion of tissue, wherein the needle is retractable from the first predetermined position to leave the first anchor in the first predetermined position, the first anchor expanding from the collapsed position to the expanded position upon retraction of the needle.

The device may further comprise a second self-expanding anchor having a collapsed position and an expanded position, the second self-expanding anchor being positionable within the inner chamber when the second self-expanding anchor is in the collapsed position, and a second suture extending through the needle and attached to the first anchor, wherein the actuator is configured to drive the needle with the second anchor into a second predetermined position in a second portion of the tissue, the needle being retractable from the second predetermined position to leave the second anchor in a position distally beyond the second

portion of tissue, the second anchor expanding from the collapsed position to the expanded position upon retraction of the needle. Each of the first and second sutures may be a braided suture.

The device may include an actuator configured to distally retract the first suture and the second suture into a distal end of the device, thereby pulling the first anchor and the second anchor together, the pulling of the first anchor and the second anchor together causing the first portion of tissue to be pulled toward the second portion of tissue.

The sutures may be twisted as they are distally retracted.

The device may further comprise a clamp configured to join the first suture to the second suture and cut excess portions of the first suture and the second suture distal to the joint of the first suture to the second suture.

According to example embodiments of the present invention, a surgical system includes a first implant coupled to a first suture, a second implant coupled to a second suture, and an implant driver configured to position the first implant in a first predetermined position in relation to a first tissue, and to position the second implant in a second predetermined position in relation to a second tissue, the implant driver configured to draw the sutures together to bring the implants into apposition thereby bringing the first tissue and the second tissue into apposition, wherein the implants are configured to pierce both the first tissue and the second tissue at an interface of the first and second tissues when the first and second tissues are in apposition.

The first implant may be a first disk and the second implant is a second disk.

The first disk may include a plurality of projections each configured to cut entirely through the first tissue and the second disk includes a plurality of projections each configured to cut entirely through the second tissue.

According to example embodiments of the present invention, a method comprises positioning a first implant in a first predetermined position adjacent a first tissue, positioning a second implant in a second predetermined position adjacent a second tissue, bringing the first and second tissues into apposition by pulling the first and second implants into apposition with each other, and creating multiple puncture wounds in the first and second tissues with the first and second implants to allow the first and second tissues to heal together in the region of the puncture wounds.

Further features and aspects of example embodiments of the present invention are described in more detail below with reference to the appended Figures.

BRIEF DESCRIPTION OF THE DRAWINGS

Figures 1A and 1B illustrate the insertion and manipulation of a catheter into an organ.

Figures 2A and 2B illustrate a needle extending from the catheter of Figures 1A and 1B and piercing a tissue wall of the organ.

Figures 3A to 3C sequentially illustrate the opening of the needle and deployment of a plate or implant from the needle.

Figures 4A to 4E sequentially illustrate the withdrawal of the needle from the tissue wall and into the interior of the catheter.

Figures 5A and 5B sequentially illustrate the re-maneuvering of the catheter to a proximal position.

Figure 6A illustrates the maneuvering of the catheter from the proximal position to a second tissue wall of the organ.

Figure 6B shows the piercing of the second tissue wall by the needle and deployment of a second plate or implant.

Figure 6C illustrates the retraction of the needle.

Figure 7A illustrates the catheter after being maneuvered to the proximal position.

Figures 7B and 7C sequentially illustrate the pulling together of the two plates or implants.

Figures 7D and 7E sequentially illustrate the withdrawal of the catheter from the organ.

Figures 8A to 8E sequentially illustrate the retraction and twisting of respective lines or cords attached to each plate or implant.

Figures 8F to 8G sequentially illustrate the clipping and joining of the respective lines or cords attached to each plate or implant.

Figure 9 illustrates surgical implants with piercing teeth.

Figure 10A illustrates a surgical implant.

Figure 10B is a cross-sectional view of the implant of Figure 10A.

Figure 10C is an illustration of a distal end portion the surgical implant of Figure 10A.

Figure 11 illustrates a needle configured to carry an anchoring fastener.

Figure 12 illustrates a distal tip portion of an anchoring fastener.

Figure 13 illustrates an anchoring fastener with wings.

Figure 14 is a schematic illustration of a surgical device to approximate tissues with anchoring fasteners.

Figure 15A illustrates the driving of an anchoring fastener through a first tissue and into a second tissue using the device of Figure 14.

Figure 15B illustrates the first and second tissues of Figure 15A with the anchoring fastener implanted in the first tissue and the suture attached to the anchoring fastener extending through the first tissue.

Figure 15C illustrates the first and second tissues of Figure 15B with a second anchoring fastener driven through the second tissue and into the first tissue and with the device twisting the sutures attached to the anchoring fasteners.

Figures 15D to 15F sequentially illustrate the retraction, twisting, and clamping of sutures attached to the anchoring fasteners of Figure 15C to join the two tissues.

Figure 15G shows fasteners driven into the tissues at angles and locations that differ from the procedure of Figures 15A to 15F.

DETAILED DESCRIPTION

Figures 1A to 8G illustrate an implant device or catheter 3000 that is maneuverable between two opposed layers 951 and 952 of tissue 950 in order to close or narrow a gap or distance between the opposed layers 951 and 952 of tissue 950. Referring to Figure 1A, the implant device 3000 is maneuvered between a first layer 951 of tissue 950 and a second, opposed layer 952 of tissue 950. The tissue may be, e.g., tissue of a stomach. As illustrated in Figure 1B, the distal end of the housing 3001 of the catheter or implant device 3000 is maneuvered to be in proximity or contact with and directed toward the first layer 951 of tissue 950. The housing 3001 may be maneuvered by any appropriate mechanism, e.g., guide wires.

After positioning and orienting the housing 3001, a sharp-pointed implant-carrying needle or sleeve 3100 is distally extended from the housing 3001 to pierce and penetrate the first layer 951 of tissue 950, as illustrated, e.g., in Figures 2A and 2B. The needle 3100 may be formed of, e.g., a shape-memory material, e.g., nitinol or spring-loaded steel.

After the needle 3100 has pierced and extended a distance beyond the first layer 951 of tissue 950, as illustrated in Figures 2A and 2B, the distal portion of the needle 3100 expands, or flowers, outwardly, with four adjacent extensions or leaves 3105 separated by longitudinal slits therebetween, as illustrated, e.g, in Figure 3A. Although four extensions or leaves 3105 are provided, it should be understood that any appropriate number may be

provided. Moreover, the distal end of the needle 3100 may have one or more elastic portions that provide analogous expansion. It is noted that the needle 2100 described above may have a structure analogous to that of needle 3100 to allow for retraction of the sleeve 2100.

When the leaves 3105 open or expand outwardly, a button-like implant or plate 3200 is exposed from the interior of the needle 3100. The plate 3200, which is formed, e.g., from a shape memory alloy such as, e.g., nitinol, or spring-loaded steel, springs from a folded position that allows for storage inside the non-expanded needle 3100, into a deployed or expanded position as sequentially illustrated in Figures 3A to 3C.

Although the plate 3200 has a flattened, cylindrical shape, it should be understood that the plate 3200 may be designed to have any appropriate shape and/or size depending on, e.g., the particular application.

After the plate 3200 is released and expanded, the needle 3100 proximally retracts back into the housing 3001, as sequentially illustrated in Figures 4A to 4E. As the needle 3100 retracts, a cord 3300, e.g., a braided suture, which is attached to the plate 3200 and extends into and through the needle 3100 is exposed between the plate 3200 and the needle 3100. Further, as the needle 3100 retracts, the cord 3300 is pulled distally to the extent that the plate 3200 contacts an exterior or distal surface of the first layer 951 of tissue 950, as illustrated, e.g., in Figure 4C.

The cord 3300 is formed of a plurality of threads 3305, e.g., absorbable or non-absorbable suture material, that extend through various apertures in the plate 3200 in a button-like manner to secure the cord to the plate 3200. It should be understood, however, that the cord 3300 may be a single strand and/or attached to the plate 3200 by any other appropriate mechanism.

Figures 5A and 5B sequentially illustrate the re-maneuvering of the catheter to a proximal position, while allowing a corresponding length of cord 3300 to be distally released from the housing 3001.

Figure 6A illustrates the maneuvering of the catheter from the proximal position to a second wall or layer 952 of tissue 950 of the organ, the second layer 952 being opposed and spaced apart from the first layer 951 of tissue 950. Figure 6B shows the piercing of the second layer 952 by a needle 3100, which may be the same needle 3100 that pierced the first layer 951, or a second needle 3100 separate from the first needle 3100. Figure 6B further shows the deployment of a second button-like implant or plate 3200 on the distal surface of the second layer 952 of tissue 950 in analogous manner to the deployment of the first plate 3200 described above.

As illustrated in Figure 6C, the needle 3100 is then retracted proximally into the housing 3001, which then returns to a proximal position as illustrated in Figure 7A, in analogous manner to that described above, with a second cord 3300 being attached to the second plate 3200.

Figures 7A to 7C sequentially illustrate the pulling together of the two plates or implants 3200 by drawing the two cords 3300 proximally into the housing 3001, and joining and clipping the two cords 3300. By drawing the two cords 3300 into the housing 3001, the two plates 3200, each attached to a respective one of the cords 3300 are drawn together. As a result of the contact between the proximal faces of the two plates 3200 and the respective distal faces of the two opposed layers 951 and 952 of tissue 900, the layers 951 and 952 of tissue 950 are drawn together, as illustrated, e.g., in Figure 7C. After joining and clipping of the two cords 3300, the implanting device 3000 is retracted from the surgical site, e.g., organ, as illustrated sequentially in Figures 7D and 7E. Thus, the above procedure results in the implantation of two opposed, button-like plates 3200 joined by cords 3300 to hold two opposed layers 951 and 952 of tissue 950 in a drawn-together position, as illustrated, e.g., in Figure 7D.

Figures 8A to 8G sequentially illustrate the pulling and clipping of the two cords 3300 by the implanting device 3000, which is illustrated in cross section. Referring to Figure 8A, the housing 3001 is in the proximal position corresponding to Figure 7A. Each cord 3300 extends into the distal opening of the housing 3001 and along the length in the internal bore of the housing 3001. Each cord also extends into a distal opening of a tubular sleeve 3400, which is also disposed in the internal bore of the housing 3001. At a distal end of the tubular sleeve 3400 are a pair of hooked twisting arms 3405. As illustrated sequentially in Figures 8B to 8E, the cords 3300 and the twisting arms 3405 are retracted proximally with respect to the housing 3001, while the tubular sleeve 3400 rotates about its longitudinal axis. The rotation of the tubular sleeve 3400 about its longitudinal axis causes the twisting arms 3405 to engage the respective cords 3300 and revolve around the longitudinal axis of the tubular sleeve 3400. The continued revolution of the twisting arms 3405 causes the engaged cords 3400 to be continually and progressively twisted as the cords 3300 and the sleeve 3400 proximally retract, until the cords 3300 have reached their desired end position and the respective plates 3200 have reached their desired approximation, as illustrated in Figure 8E. It is noted that the degree of retraction of the cords 3300 may be adjusted to achieve varying degrees of closure between the two layers 951 and 952 of tissue 950. The hooked shape of

the twisting arms 3405 holds the cords a predetermined distance from the longitudinal axis of the sleeve 3400. This allows for greater control of the twisting of the cords 3300.

Although the tubular sleeve 3400 rotates about its longitudinal axis with respect to the housing 3001 and the tissue 950, it should be understood that both the housing 3001 and the sleeve 3400 may rotate with respect to the tissue 950. For example, the sleeve 3400 may be non-rotatable, or substantially non-rotatable, with respect to the housing 3001, with the sleeve 3400 proximally retracting with respect to the housing 3001 and the tissue 950 as the sleeve 3400 and housing 3001 rotate together to twist the cords 3300.

When the desired position of Figure 8E is reached, the respective cords 3300 are fastened together and trimmed by pair of clip members 3500. The clip members 3500 are brought from an initial position, illustrated, e.g., in Figure 8E, into contact with a distal portion of the twists of the cords 3300, as illustrated in Figure 8F. In order to join and trim the cords 3300, the clip members 3500 are further closed until they lock together and separate distal implant portions 3305 of the cords 3300 from proximal excess portions 3310 of the cords 3300. At this stage, the locked clip members 3500 are released from the distal end of the implanting device 3000, thereby separating and releasing the implanted portions 3200, 3305, and 3500 from the implanting device 3000, allowing retraction and removal of the implanting device 3000 from the surgical site. Thus, the implanted portions are left in their implanted position, maintaining the first and second layers 951 and 952 of tissue 950 in the desired approximation relative to each other.

Although the clip members 3500 simultaneously join the implanted portions 3305 of the cords 3300 and cut the excess portions 3310 from the cords 3300 (e.g., by opposed cutting members at proximal locations on the respective clip members 3500, which come together to separate the excess portions 3310 as the implant portions 3305 are fastened together), it should be understood that the excess portions 3310 may be trimmed at a different time and/or by a mechanism separate from the clip members 3500.

Further, although the implant portions 3305 are joined by clamping and locking two opposed clip members 3500, it should be understood that other joining mechanisms may be provided. For example, where, e.g., the cords 3300 are made of polymeric materials, the implant portions 3305 may be welded or melted together, e.g., by application of heat, pressure, and/or high-frequencies.

The use of the plates 3200 may be particularly suitable for applications where a structure has a cavity on the distal or opposite side of the layer 951 or 952. However, in other applications, it may be preferable to replace one or more, e.g., all, of the plates 3200 with one

of the anchoring fasteners, e.g., fasteners 250, 350, 550 described below. In this regard, the suture 3300 (e.g., a braided material) would be attached to the fastener 250, 350, 550, at the distal end thereof, as set forth in greater detail below, and extend into the distal end of the housing, e.g., housing 3001, in the manner described above. The remaining operation would be analogous to that described above with respect to the plates 3200, with the sutures 3300 being retracted, joined, and trimmed. However, one or more (e.g., all) of the tissue portions would be pulled by the engagement of an anchoring fastener (e.g., fastener 250 or 300), rather than the button-like plate 3200. The fastener may be deposited in any manner disclosed herein, including, e.g., directly firing the fastener into the tissue or insertion via a needle such as, e.g., the needle 2100. It should be understood that more than two implants (e.g., plates 3200 and/or fasteners, e.g., fasteners 250, 350) may be provided, with more than two cords 3300 being retracted, twisted and joined.

The cords/sutures 3300, plates 3200, and/or clip members 3500 may be formed entirely or partly of a bioabsorbable material, e.g., polyglycolic acid (PGA), or a PGA copolymer.

Figure 9 illustrates a pair of piercing pledgets or implants 4200. The piercing implants may be provided in a surgical system having all of the features described above with respect to the surgical device 3000, with piercing implants or disks 4200 being provided in place of the implants 3200. Although both implants 3200 have been replaced by implants 4200 it should be understood that one piercing implant 4200 may be used in combination with an implant 3200 described above.

As illustrated in Figure 9, the implants 4200 have been deployed and secured in the same manner described above with regard to implants 3200. It is noted that implants 4200, like implants 3200 are self-expanding and may be deployed from the needle 3100. For simplicity, the cords 3300 and clip elements 3500 are not shown in Figure 9.

The implants 4200 differ from the implants 3200 in that they are each provided with a plurality of tissue-piercing teeth 4205 extending from the surface that contacts the respective layers of tissue 951 and 952. These sharp pointed projections are interspersed, e.g., according to a predetermined density per unit area, over the tissue contacting face of each implant 4200. The teeth 4205 have a length selected to fully penetrate the respective layer of tissue 951, 952. That is, the teeth 4205 have a length that allows the sharp tip to penetrate and extend beyond the opposed face of the tissue, e.g., the interior surface of an organ where the tissues 951 and 952 are opposed walls of the same organ. This full penetration forms a wound that causes collagen to naturally be produced from the tissue and flow, via the holes

formed by the teeth 4205, into the space between the two opposed tissues 951 and 952. This is advantageous in that it facilitates healing together of the two apposed tissues 951 and 952.

Figures 10A and 10B illustrate a surgical micro implant or fastener 250 that may be used in connection with a surgical system as described above. However, one or more of the disk-like implants 3200 and/or 4200 are replaced by implant 250. Figure 10B is a cross-sectional view of the surgical implant 250 of Figure 10A with a cross-sectional plane extending along and including the longitudinal axis of the fastener 250 of Figure 10A. The fastener 250 has the suture 3300 extending proximally from a proximal end 285 of the fastener body 255. In this regard, when a driver fires the fastener 250, e.g., by application a saline or other precise hydraulic force or any other appropriate mechanism, the depth to which the fastener 250 is driven is limited by the amount of slack in the suture 3300. This may be accomplished by fixing a proximal end and/or other proximal portion of the suture 3300 to a structure, e.g., a fixed position within the driver device, with a predetermined length and/or slack between the fixing location and the fastener body 255.

Referring to the cross-sectional view of Figure 10B, the suture 3300 may extend longitudinally into an interior location 290 of the fastener body 255. An example manufacturing method may include molding, coextruding, or otherwise forming the fastener head 905 over the suture 3300. It should be appreciated however, that any appropriate manufacturing method may be employed. Further, although a suture 3300 of non-stretchable material is provided, it should be understood that other materials, e.g., stretchable materials, may be provided. However, it may be preferable that, even if stretchable, the material have a predeterminable extension limit for particular driving momentums and/or applications. Further, a braided, non-braided, mono-filament, and/or multi-filament material may be provided.

Although the fastener 250 includes micro filaments 275 to anchor into a tissue and resist proximal dislocation after implantation, it should be understood that any other anchoring mechanism, e.g., wings as described above, may be provided. Moreover, any of the features disclosed with regard to the other example implants disclosed herein may be provided in conjunction with the fastener 250.

Figure 11 shows a needle 5600 that includes many features in common with needle 3100 described above. However, the needle 5600 is configured to position the fastener 250 to the predetermined location within the tissue 951, 952.

Further, it may be desirable to form the needle 5600 to have a smaller resting or initial diameter than the fastener contained therein. For example, as illustrated in Figure 11, the

needle 5600, when the fastener 650, which is identical to fastener 250, is inserted into the needle 5600, the metal bands 5605 bulge outwardly to form expanded gaps between the adjacent metal bands 5605. This may be advantageous to allow the filaments and/or other anchoring mechanism(s) to engage the adjacent tissue and resist proximal movement of the fastener as the needle 5600 is retracted. For example, as illustrated in Figure 11, the micro anchoring filaments 675 of the fastener 650 are exposed through the longitudinally extending gap between adjacent bands 5605 of the needle 5600, thus allowing the filaments 675 to engage surrounding tissue even at the initial stages of the retraction of the needle 5600. In this regard, the engagement of the filaments 675 with the tissue may be sufficient in and of itself to allow proximal retraction of the needle 5600 while leaving the fastener 650 in its implanted position. It should be understood, however, that other mechanisms, e.g, a push rod, may be provided in connection with the needle 5600 to facilitate retraction of the needle 5600 while retaining the implant 650 in its predetermined location. Since some applications do not require full penetration of the implant, the needle 5600 may only need to penetrate to a depth that does not compromise or pierce the outer surface of the tissue 951, 952.

The discussion herein, including the discussion below, of the features of implant 250 also apply to the other implants 350, 550, 650 disclosed herein, except to the extent that any differences in features are explicitly mentioned.

The surgical implants 250, which may be absorbable or non-absorbable, are designed to penetrate a viscera or tissue planes. The implants 250 are designed to penetrate into the tissue under controlled rapid deployment to a predetermined depth. The implant is shaped similarly to a needle with a predetermined geometry. Each implant 250 has an elongated body 255 that tapers in a distal region to a needle-like tip 260. Each implant 250 may be deployed, e.g., by being pushed from a precisely placed hollow needle or tube containing the implant 250. The implants 250, as well as any other example implants disclosed herein, may be formed using e.g., micromachining techniques.

The micro implants 250 may have a diameter of one millimeter, or approximately one millimeter, and a length that is in a range from 5 millimeters to 10 millimeters. According to example embodiments, the diameter is less than one millimeter. According to example embodiments, the diameter is in a range from 0.8 millimeters to 1.2 millimeters. It should be understood, however, that other dimensions may be provided.

The body 255 of each implant 250 has specifically designed micro anchoring filaments 275 which arise from the core of the implant 250 to extend outwardly therefrom. The anchoring filaments 275 are located around the circumference and along at least a

portion of the length of the body 255 of the implant 250. This allows the implant 250 to resist removal once it has penetrated the tissue.

The filaments 275 may have any suitable dimensions. For example, it may be advantageous to provide a filament tip (i.e., free end) diameter of 0.1 millimeters and tapering toward a diameter of 0.25 millimeters at the body.

The core, which is, e.g., cylindrical, has a constant diameter along a substantial length of the body 255 of the implant 250. For example, the core of the implant 250 has a constant cross-section, and constant diameter, from a proximal end to a substantially conically shaped tapered portion toward the tip 260. It should be understood however, that the implants 250 may have a more continuous taper and/or have a constant or non-constant rate of taper.

The anchoring filaments 275 extend outwardly at an angle with respect to the longitudinal axis of the implant 250. In this regard, the filaments, in addition to extending outwardly away from the longitudinal axis, also extend in a proximal direction, away from the tip 260. This allows for the filaments 275 to slide along the pierced tissue during distal driving or insertion. However, proximal movement of the implants 250 from the inserted position is prevented or resisted by engagement of the outer, free ends of the filaments 275 with the relatively soft tissue. The filaments 275 may be flexible or substantially rigid. The filaments 275 should, however, have sufficient stiffness or strength to resist proximal withdrawal of the implant 250 from the inserted position. Further, although the filaments 275 are illustrated as being straight, it should be understood that some or all of the filaments 275 may be at least partially curved, and/or have one or more bends between straight portions and/or curved portions. Moreover, the filaments 275 of a given implant 250 may have constant or differing lengths, radial extensions, and/or angles with respect to the longitudinal axis of the implant 250.

The micro filaments 275 may be provided with any appropriate density and relative spacing, depending on the particular application. For a given application, a greater density (i.e., a greater number of filaments per unit of surface area) of smaller filaments may be provided, or a lesser density of larger filaments (optionally reinforced with a shape memory alloy, e.g., nitinol and/or spring-loaded steel), while presenting the same or comparable suture retention or "pull through strength." The optional reinforcement could be a "V" shaped portion formed of shape memory alloy, e.g, nitinol and/or spring-loaded steel. The filaments 275 may be absorbable or non-absorbable in whole or in part.

Although the fastener 250 uses micro filaments 275 to anchor the fastener 250 into the tissue, it should be appreciated that any appropriate anchoring mechanism may be provided. for example, spring loaded tabs may be provided.

Each implant 250 has a proximal surface 285 via which a driving force may be applied, e.g., by saline hydraulics, a spring force or any other appropriate mechanism. The proximal surface 285 of the implant 250 corresponds to the surface from which the suture 3300 proximally extends and is the same or substantially the same as the diameter of the core 220. However, any appropriate location or dimensions may be provided for the surface 285.

Although the implants 250 have cores with circular cross sections, it should be understood that other cross-sections may be provided, e.g., rectangular, triangular, oval, polygonal, and/or any other regular or irregular shape. Further, it should be understood that the anchoring micro filaments 275 may be evenly spaced apart or may have non-uniform spacing. Moreover, the filament density, i.e., the number of the filaments 275, 575, 675 per unit of surface area of the core may be constant, or may vary.

Figure 12 shows a distal end portion of an implant 550, which is identical to the implant 250 except for the distal end portion illustrated in Figure 12. The distal arrangement includes three concave surfaces 580 that distally converge to form the sharp point 560. Separating the three concave surfaces 580 are three tapered cutting edges 585. These tapered cutting edges 585 may facilitate penetration of tissue, e.g., soft tissue. Although the end portion illustrated in Figure 12 includes three concave surfaces 580 separated by three corresponding tapered cutting edges 585, it should be understood that any appropriated number of concave surfaces 580 and corresponding cutting edges 585 may be provided.

Moreover, Figure 13 illustrates a surgical micro implant or fastener 350 that has features in common with the fastener 250 and may be used in conjunction with any of the fastening applications described herein. However, the fastener 350 includes a corrugated body 351. The body 351 includes grooves 353 that extend axially along the length of the body 351. Thus, extending circumferentially around the body 351, a plurality of grooves 353 alternate with a plurality of ridges 355. Further, the fastener body 351 includes a pair of split portions or wings 357 and 358. The split portions are formed by respective splits or cuts 359 into the body 351. In this regard, the splits 359 may be formed by making a cut radially into the body 351 and extending in an axial direction. Thus, the two split portions 357 and 358 are attached to the remainder of the body 351 at a distal position and extend proximally to free ends. The free ends include a plurality of sharp protrusions along a curved surface. These points are formed due to the corrugations. In particular, the ridges 355 form the sharp

protrusions. In particular, the ridges 355 form the sharp protrusions, as illustrated in the inset partial side view in Figure 13, which are advantageous for gripping tissue and preventing distal sliding of the fastener 250. Although each split portion 357 and 358 includes three such protrusions as illustrated, it should be understood, that the fastener 350 may be designed such that one or more of the split portions has any other number of protrusions, including a single sharp protrusion. For example, if a larger number of sharp protrusions are desired, the body 351 could be more densely corrugated (i.e., a greater number of alternating grooves 353 and ridges 355 could be provided) and/or the angle of the cut or slice could be adjusted. Further, the length of proximal extension of the projections may be adjusted by varying the depth of the grooves 353 with respect to the ridges 355.

The split portions 357 and 358 do not substantially impede distal insertion into tissue but resist proximal movement from an insertion location by engaging the tissue. It has been discovered that the combination of the pointed and/or sharp-edged proximal ends of the split portions 357 and 358 with the alternating ridges on the proximal end of the split portions creates improved performance.

Further, the split portions or wings 357 and 358 are axially offset from each other. For example, split 357 is axially located at position a along axis x and split 358 is axially located at position b along axis x. This allows for greater structural strength of the other portions of the body 351 as compared to a non-offset configuration. In particular, since the cuts progress continually radially inward as they progress distally, a non-offset portion would have a substantially smaller amount of material in cross-section in the distal end of the cut. This would lead to a mechanically weak point or region along the axis of the body and could lead to mechanical failure, especially in fasteners of small dimensions.

The distal tip of the fastener 350 is pyramidal, with a sharp point, and a plurality of surfaces separated by edges that converge at the sharp point. Although four planar surfaces are provided, it should be appreciated that any appropriate suitable number of surfaces may be provided and that one or more or all of the surfaces may be non-planar.

The fastener 350 also includes a hooked end portion 360. The hooked portion may be suitable for coupling any other temporary and/or permanent implant. For example, the hook may be used to secure the suture 3300. However, the fastener 350 may advantagously be formed with the suture 3300 extending therewith, e.g., by being molded or co-extruded with the suture 3300, as described with regard to fastener 250. Moreover, the hooked end portion may be dispensed with.

The fastener 350 may be produced by first forming the body 351 with the corrugations, e.g., by injection molding or extrusion, and subsequently forming wings 357 and 358, e.g., by cutting radially into the side of the body 351. As illustrated, the cut is curved, with an angle (at the proximal entry point), relative to the longitudinal axis of the body 351, that gradually decreases from the proximal initial cutting location toward the distal end of the fastener 350 and eventually becoming linear. Although the spit or cut of the illustrated example is made with a curved or varying angle with respect to the longitudinal axis of the body 351, it should be understood that any appropriate cut, including a linear cut, may be made.

Although the fastener 350 includes two wings spaced equally around the radial periphery of the body 351, it should be appreciated that any number of wings, including a single wing may be provided and at any appropriate spacing around the radial periphery.

Furthermore, it should be understood that the corrugated split-bodied configuration may be employed in combination with any of the other fastener features disclosed herein. For example, the fastener 350 may include filaments in addition to the split portions.

Referring to Figure 14, a surgical system 5000 includes a handpiece 5100 configured to drive the fastener 250, for example, to a predetermined depth. The depth is limited, e.g., by a predetermined amount of slack in the suture 3300. The proximal end of the suture 3300 is attached to a capstan 5105 configured to adjust the length of the suture 3300 extending from capstan 5105. In this regard, the capstan 5105, which may be actuated by a motor system or any other appropriate mechanism, may set the slack by reeling off a predetermined length of suture 3300 prior to driving the fastener 250 and/or the capstan 5105 may have a predetermined amount of allowed rotation such that driving of the fastener 250 causes the capstan to rotate only the predetermined amount, thereby setting the driving depth of the fastener 250. The determination of the depth and/or the driving velocity of the fastener 250 may be determined in a processor 5110 of the handpiece 5100. The device 3000 described above may include an analogous handpiece. Although the processing takes place in a processor 5110 located in the handpiece 5100, it should be understood that the processor may be disposed in other parts of the device, e.g., in the shaft 5115 and/or the processing may take place location separate from the handpiece 5100 and shaft 5115, e.g., at a remote computing unit that communications, e.g., wirelessly, with the surgical device. Further, it should be understood that the capstan 5110 may be disposed in the shaft 5115.

The shaft 5115 includes many features, e.g., the maneuverability, the winding mechanism and the clipping mechanism, of the catheter 3000 described above.

During a procedure, the system 5000 operates in a manner analogous to the device 3000 described above. However, one or more of the implants 3200 are replaced by the implants 250. The implants 250 may be hydraulically delivered, or delivered by a piercing needle, or any other appropriate driving mechanism. Regarding hydraulic delivery, it is noted that a very precise force may be delivered at the distal end portion of the shaft 5115 to drive the fastener 250. This force may be controlled by the processor 5110 in connection with hydraulics, e.g., in the handpiece. For example, the hydraulic fluid, e.g., saline, may be disposed in a tube extending along the shaft 5115. Hydraulics and controls in the handpiece 5100 may then transmit a very precise force, via the hydraulic fluid extending along the shaft 5115, to the distal end portion of the shaft 5115 to precisely drive the fastener 250.

As illustrated in Figure 14, the fastener 250 has been driven into the tissue 951, 952. As the shaft is retracted from the implantation location, e.g., to be repositioned at the opposed layer of tissue, the capstan 5105 reels off a corresponding length of suture 3300. Further after driving a second implant, e.g., another fastener 250, the two sutures 3300 are wound in the manner described above with respect to device 3000. During the winding the capstan may be actuated, e.g., according to control signals from the processor 5110 to progressively retract the suture 3300. However, the capstan may be controlled to resist any rotation, e.g., where the capstan is mounted to move in connection with a retracting winding tube such as the tube 5400 described below. Each suture 3300 may have its own respective capstan 5105 or the sutures 3300 may share a capstan mechanism. If the sutures 3300 share a capstan mechanism, it may be advantageously be configured with a mechanism to retract/extend each suture 3300 independently, e.g., during the fastener driving procedures. Moreover, the capstan(s) 5105 may be coupled to the suture twisting mechanism to avoid any undesired twisting proximal to the twisting interface, e.g, hooks.

Figure 15A illustrates the driving of an anchoring fastener 250 through a first tissue 1951 and into a second tissue 1952 using the device of Figure 14.

Figure 15B illustrates the first and second tissues 1951, 1952 of Figure 15A with the anchoring fastener 250 implanted in the first tissue and the suture 3300 attached to the anchoring fastener 250 extending through the first tissue 1951.

Figure 15C illustrates the first and second tissues 1951, 1952 of Figure 15B with a second anchoring fastener 250 driven through the second tissue 1952 and into the first tissue 1951 and with the device of Figure 14A twisting the sutures 3300 attached to the anchoring fasteners 250.

Figures 15D to 15F sequentially illustrate the retraction, twisting, and clamping of sutures attached to the anchoring fasteners of Figure 15C to join the two tissues.

Figure 15G shows fasteners driven into the tissues at angles and locations that differ from the procedure of Figures 15A to 15F.

Figures 15D to 15F sequentially illustrate an approximation procedure employing the fasteners 250. As illustrated in Figure 15C, the fasteners 250 have been driven into the opposed tissues 1951 and 1952 and the sutures 3300 are in the process of being retracted and twisted in manner analogous to that described above with respect to device 3000. Within the tube portion 5115 is a winding tube 5400 that rotates and retracts, along with its winding hooks 5405 to wind and retract the sutures 3300. A pair of actuatable clip elements 5500 are disposed at the distal end portion of the tube 5115. These elements 5400, 5405, and 5500 have features anologous to elements 3400, 3405, and 3500 described above with regard to device 3000.

As illustrated in Figure 15D, the sutures 3300 are in a taut state as the tissues 1951, 1952 are moving toward each other due to the twisting and retraction of the proximal portions of the sutures.

As illustrated in Figure 15E, the tissues 1951, 1952 have been brought into contact with each other and are being held securely by the sutures 3300.

As illustrated in Figure 15F, the clip elements 5500 have been actuated to clip and join the sutures 3300 in the same manner described above with regard to clip members 3500. It is noted that this arrangement does not require penetration of full thickness of the respective tissues 1951 and 1902 into which the implants 250 are implanted. That is, the sharp tips of the anchoring fasteners are not exposed beyond the outer walls of the tissue need not be pierced. This may be advantageous to reduce trauma to the tissue and limit the possibility of damaging any adjacent tissues. It should be understood, however, that the fasteners 250 may be driven to a depth such that the tip extends beyond the outer wall of the respective tissue 1951, 1952 into which the respective fastener is implanted.

The arrangement of Figure 15F maintains a closure that secures the illustrated end portions of the two tissues 1951, 1952 together.

Figure 15G shows an arrangement that is analogous to the arrangement of Figures 15A to 15F, but differs in that the angle between the axes along which the fasteners 250 are driven is less. Further, the fasteners 250 are driven through end faces of the tissues 1951, 1951. In this regard, it should be understood that the fasteners 250 may be driven at any

appropriate angle (including, e.g., substantially 180 degrees) to each other and at any appropriate angle or location with respect to the respective tissues 1951, 1952.

The driver of any example implants disclosed herein may be configured to drive any of the example fasteners described herein to a predetermined depth. The precision of the depth may be accomplished by any appropriate mechanism, e.g., a precise hydraulic driving force, e.g., with saline fluid, engagement with flanges or other similar stops, or a suture that tautens to limit the depth. Further the depth may be monitored using fluoroscopy or any other appropriate imaging mechanism. The driving mechanism may include pressurized saline or other hydraulic fluid that is pressurized through the endoscopic catheter shaft. Thus, very precise control may be accomplished.

According to example embodiments, a computer system, e.g. including processor 5110, may determine the location of two points, e.g., and determine a distance therebetween. The distance may be used as a desired distance to which the fastener is fired. The implanting distance may be set by any appropriate adjustment mechanism, e.g., an adjustable stop or flange, a cord or suture attached to the fastener, and/or precisely controlling the speed and momentum of the fastener during the implantation (e.g., by finely controlling a hydraulic propulsion system). Such measurements, determinations, and/or control of depth may be employed in conjunction with any implantation of fasteners disclosed herein.

The fasteners are preferably driven at a speed greater than 50 meters per second, more preferably in a range of 50 to 350 meters per second, and most preferably at 350 meters per second. However, it should be understood that the fasteenrs may be driven at any suitable speed sufficient for the fasteners to puncture tissue.

Modern manufacturing processes allow for near nano technology applications. This allows the implant 250 and any other implants disclosed herein to be manufactured in a size and complexity that may not have been possible in years past. The implant 250 may be injection molded of either absorbable or non absorbable polymers and then processed to add the features of the protruding filaments 275.

Although the implants 250 are formed of polymer, it should be appreciated that any appropriate material may used, e.g., metal or a composite material.

In order to accurately penetrate adjacent tissues that are not held or secured on a distal side, a rapid penetration of the layer(s) of tissue may be required in order to effect a desired penetration. If an implant 250 is applied slowly, the tissue may be pushed distally away by the implant and/or needle without adequate penetration. Thus, some example delivery mechanisms eject the implant a relatively high velocity. In some preferred examples, saline

is used to pressurize the channel within the catheter or needle at such a rate that the plunger will eject the implant 250 at the precise velocity. Other example embodiments utilize a spring-loaded mechanical mechanism to eject the implant. Further example embodiments push the implant using long push rods which run the length of the catheter. The ejection modality is computer-controlled. However, it should be understood that the ejection may be, e.g., operator-controlled. For example, the ejection force may be predetermined and repeatable by a mechanical system, e.g., a spring-loaded system, which is triggered by an operator, e.g., a surgeon.

Any of the mechanisms and devices described above may be utilized with pressure sensing, e.g., sensing of the pressure required to progress a needle or fastener using any appropriate pressure sensing mechanism. The pressure may be relayed to, e.g., a computer control system, including, e.g, processor 5110, in a hand piece, e.g., handpiece 5100, to which the implanting device of any of the embodiments described herein is coupled. Further, imaging data may be obtained, including, e.g., ultrasound or other digital imaging, and relayed to, e.g., the computer control system in a hand piece. This information, including pressure and/or imaging information and/or any other sensed information may be used by the control system to appropriately control the insertion of the various needles and/or implants into the tissue. For example, the control system may control the rate, location, angle, and/or depth of insertion. Such precise control may be particularly advantageous when repairing defects in the heart, which requires very precise placement of implants.

The various mechanisms described herein provide for a tissue repair system that allows great flexibility. For example, smaller defects may be repairable with a single fastener (e.g., fastener 100 or any other fastener described herein), and larger defects may be repairable with a plurality of fasteners, with or without a washer or plate 2200, as described above. Larger defects, e.g., hernias or large holes, may be more suited for a mesh 1300 application, as described above.

The various implants described herein, e.g., fasteners 250, 350, 550, 650 plates 3200, and clip elements 3500, 4500, may be formed by molding, e.g., injection molding.

Moreover, the fasteners 250, 350, 550, 650 may be provided with a head element that restrains proximal movement of the tissue with respect to the fastener. Further, the head elements may be fixed or movable, e.g., where the fasteners have ratcheted or threaded proximal end portions configured to receive corresponding ratcheting or threaded head elements.

Further, any of the implantable elements described herein, e.g., fasteners 250, 350, 550, 650, plates 3200 4200, and clip elements 3500, 5500, and/or sutures 3300, may be formed wholly or partly of a material absorbable into the patient's body, or of a non-absorbable material, depending on, e.g., the specific application. For example, these elements may be formed of polyglycolic acid (PGA), or a PGA copolymer. These elements may also, or alternatively, be formed of copolymers of polyester and/or nylon and/or other polymer(s). Moreover, these elements may contain one or more shape-memory alloys, e.g., nitinol and/or spring-loaded steel.

Absorbable materials may be advantageous where there is a potential for misfiring or improper locating of the various implants. For example, in a situation where a fastener or other implant is driven at an unintended location, or where the tissue does not properly receive the implant, the implant even where not needed, would relatively harmless, as it would eventually absorb into the patient's body.

Although the present invention has been described with reference to particular examples and exemplary embodiments, it should be understood that the foregoing description is in no manner limiting. Moreover, the features described herein may be used in any combination.

WHAT IS CLAIMED IS:

1. A surgical device, comprising:

a first anchor coupled to a first suture;

a second anchor coupled to a second suture;

an implant driver configured to anchor a first implant to a first portion of tissue and to anchor a second implant to a second portion of tissue, the first and second anchors being coupled to respective first and second sutures; and

a winder configured to twist the first and second sutures together bringing the first portion of tissue into approximation with the second portion of tissue.

2. The device of claim 1, wherein the implant driver is configured to anchor the implants by using a hydraulic driver.

3. The device of claim 2, wherein the hydraulic driver uses saline as a hydraulic fluid.

4. The device of claim 1, further comprising clamping element configured to clamp together the sutures after the winding.

5. The device of claim 4, wherein the clamping element is further configured to trim the an excess length of each suture disposed proximally to a location of the clamping.

6. The surgical device of claim 1, wherein the first implant is a fastener having a plurality of anchoring filaments configured to resist retraction of the fastener from the first portion of tissue.

7. The surgical device of claim 1, wherein the first implant is a fastener having a plurality of wings configured to resist retraction of the fastener from the first portion of tissue.

8. The surgical device of claim 1, wherein the first implant is a self-expanding anchor.

9. The surgical device of claim 8, wherein the first implant is disk-shaped.

10. The surgical device of claim 9, wherein the self-expanding anchor includes a plurality of tissue- piercing teeth configured to penetrate the entire thickness of the first portion of tissue.

11. A surgical device, comprising:

a hollow needle having an inner chamber and a sharp tip configured to pierce a tissue;

a first self-expanding anchor having a collapsed position and an expanded position, the first anchor being positionable within the inner chamber when in the collapsed position;

a first suture extending through the needle and attached to the first anchor; and

an actuator configured to drive the needle containing the first anchor into a first predetermined position in a first portion of tissue, wherein the needle is retractable from the first predetermined position to leave the first anchor in the first predetermined position, and the first anchor is expandable from the collapsed position to the expanded position upon retraction of the needle.

12. The device of claim 11, further comprising:

a second self-expanding anchor having a collapsed position and an expanded position, the second self-expanding anchor being positionable within the inner chamber when the second self-expanding anchor is in the collapsed position; and

a second suture extending through the needle and attached to the first anchor, wherein the actuator is configured to drive the needle with the second anchor into a second predetermined position in a second portion of the tissue, the needle being retractable from the second predetermined position to leave the second anchor in a position distally beyond the second portion of tissue, and the second anchor is expandable from the collapsed position to the expanded position upon retraction of the needle.

13. The device of claim 12, wherein each of the first and second sutures is a braided suture.

14. The device of claim 12, wherein the device includes an actuator configured to distally retract the first suture and the second suture into a distal end of the device, thereby pulling the first anchor and the second anchor together, the pulling of the first anchor and the second anchor together causing the first portion of tissue to be pulled toward the second portion of tissue.

15. The device of claim 14, wherein the sutures are twisted as they are distally retracted.

16. The device of claim 14, further comprising a clamp configured to join the first suture to the second suture and cut excess portions of the first suture and the second suture distal to the joint of the first suture to the second suture.

17. A surgical system, comprising:

a first implant coupled to a first suture;

a second implant coupled to a second suture; and

an implant driver configured to position the first implant in a first predetermined position in relation to a first tissue, and to position the second implant in a second predetermined position in relation to a second tissue, the implant driver configured to draw the first and second sutures together to bring the implants into apposition thereby bringing the first tissue and the second tissue into apposition, wherein the first and second implants are configured to pierce both the first and second tissues at an interface of the first and second tissues when the first and second tissues are in apposition.

18. The system of claim 17, wherein the first implant is a first disk and the second implant is a second disk.

19. The system of claim 18, wherein the first disk includes a plurality of projections each configured to cut entirely through the first tissue and the second disk includes a plurality of projections each configured to cut entirely through the second tissue.

20. A method, comprising:

positioning a first implant in a first predetermined position adjacent a first tissue;

positioning a second implant in a second predetermined position adjacent a second tissue;

bringing the first and second tissues into apposition by pulling the first and second implants into apposition with each other; and

creating multiple puncture wounds in each of the first and second tissues with the first and second implants.

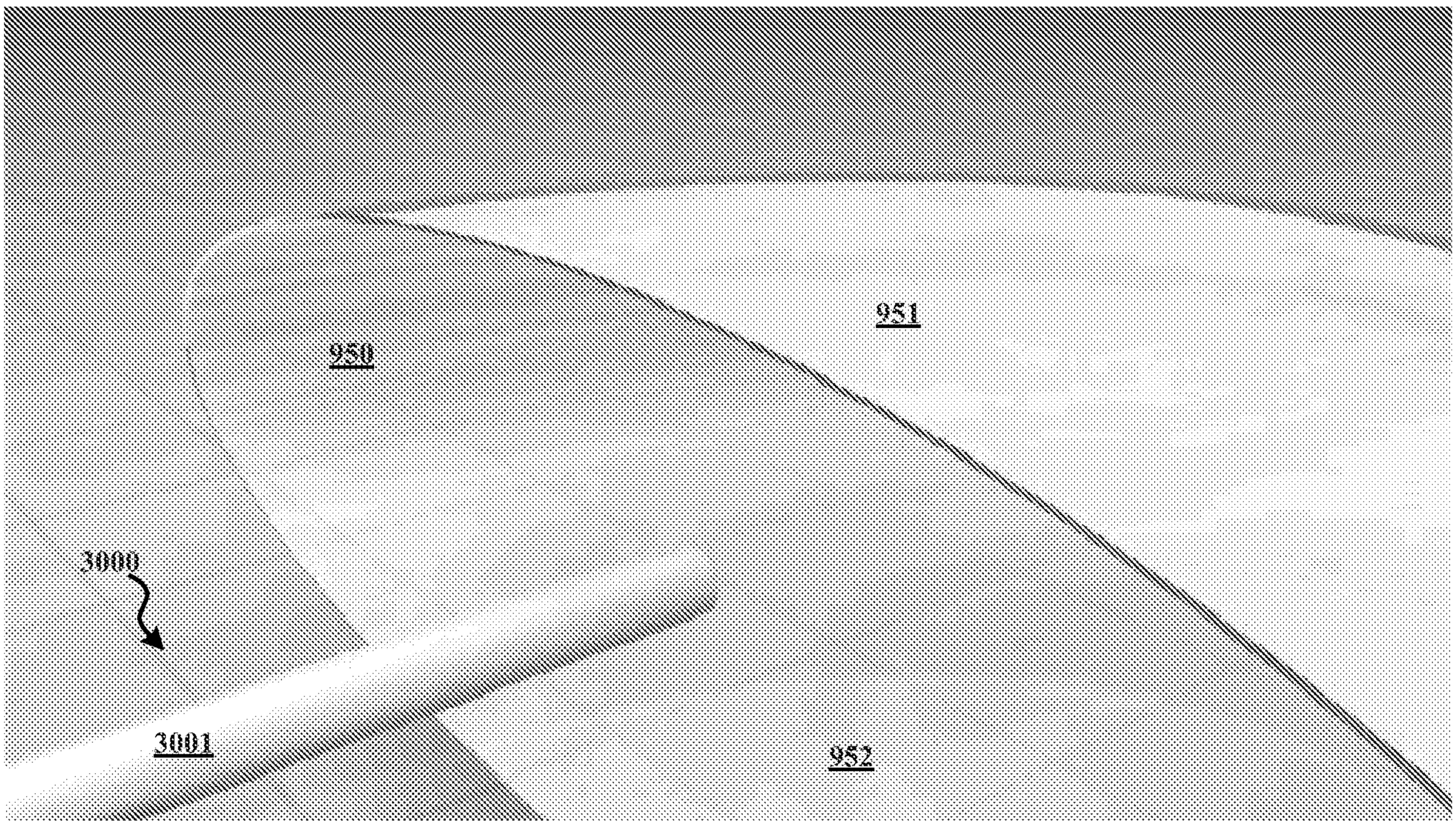

FIG. 1A

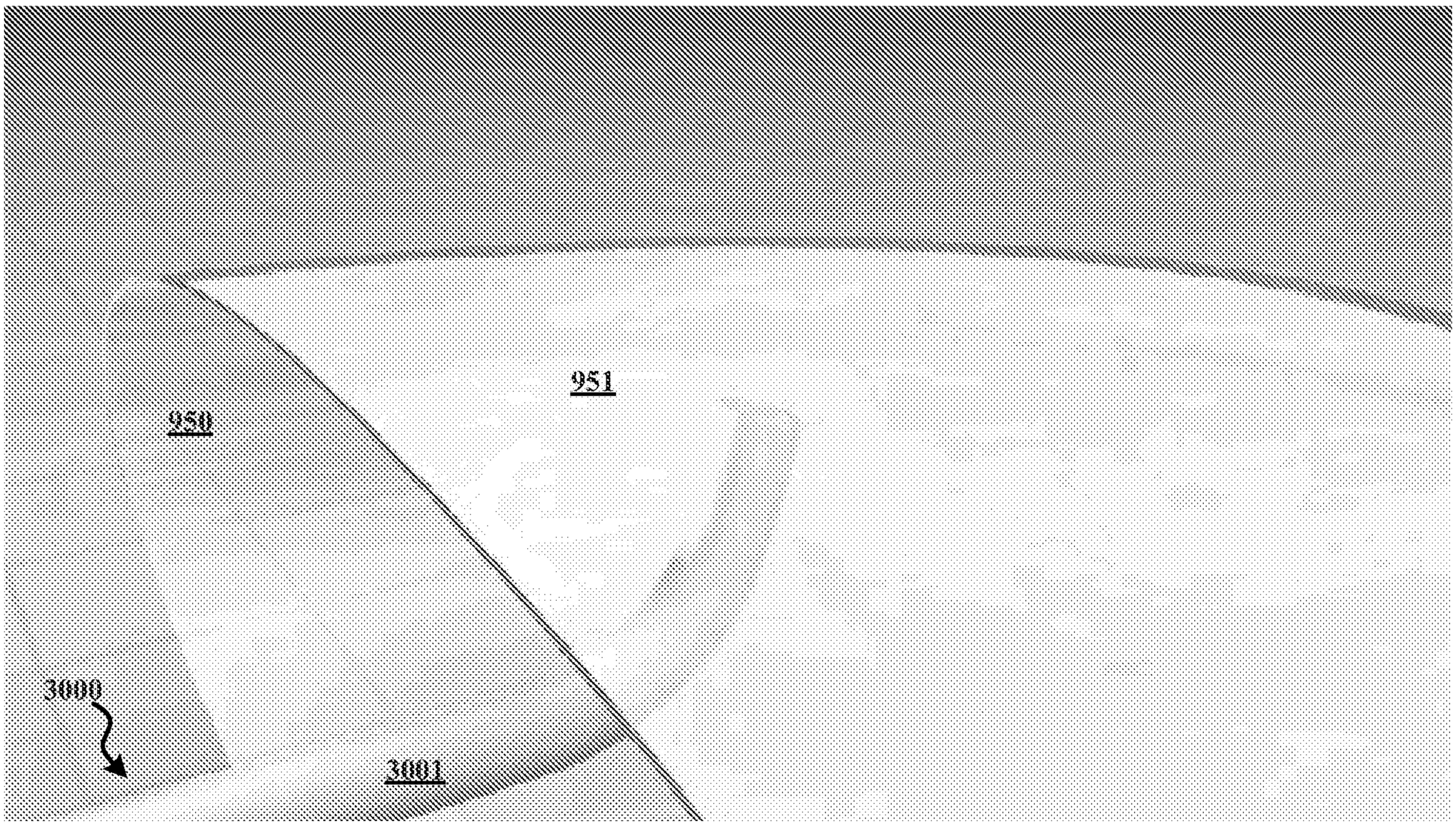

FIG. 1B

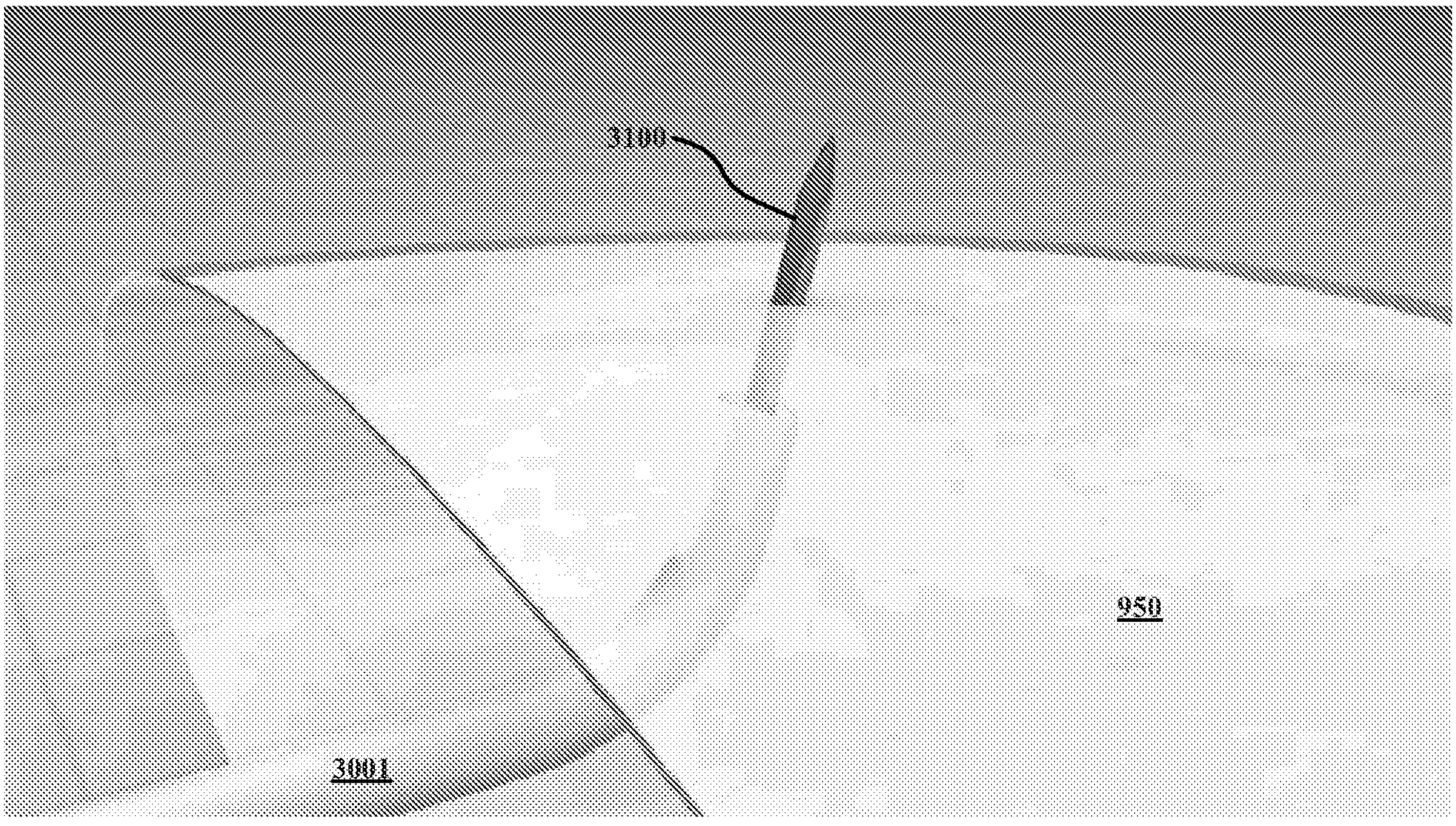

FIG. 2A

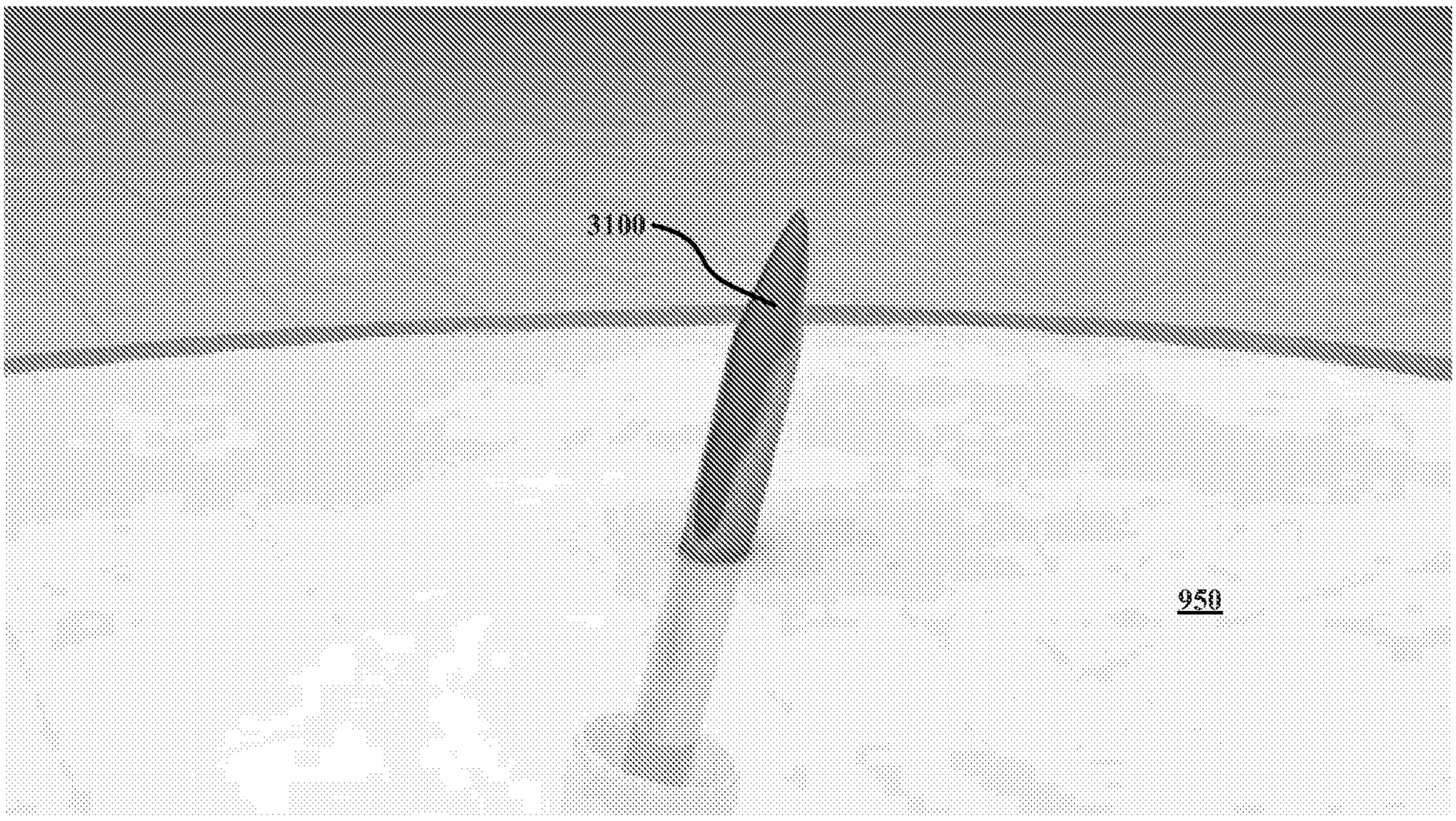

FIG. 2B

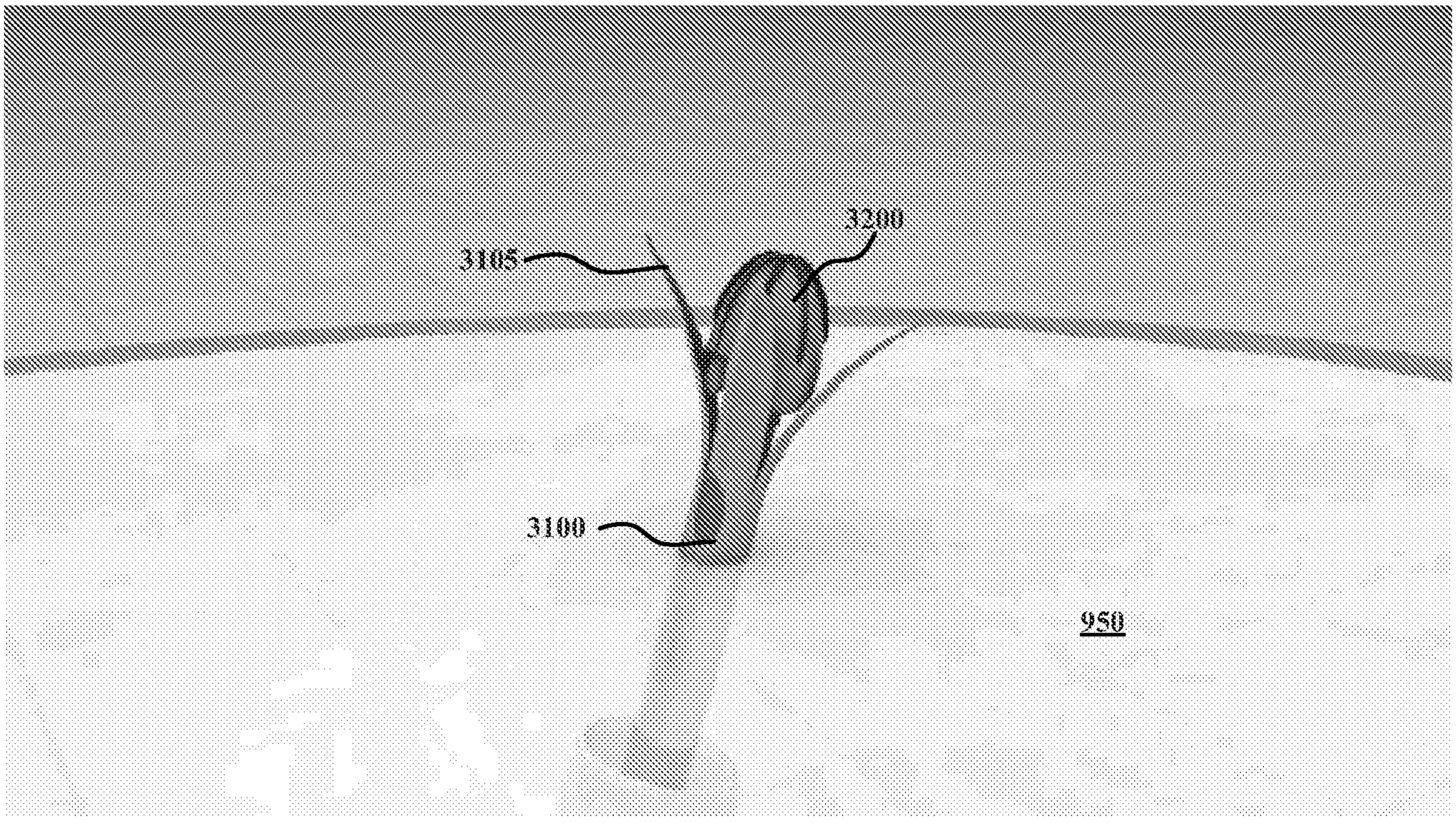

FIG. 3A

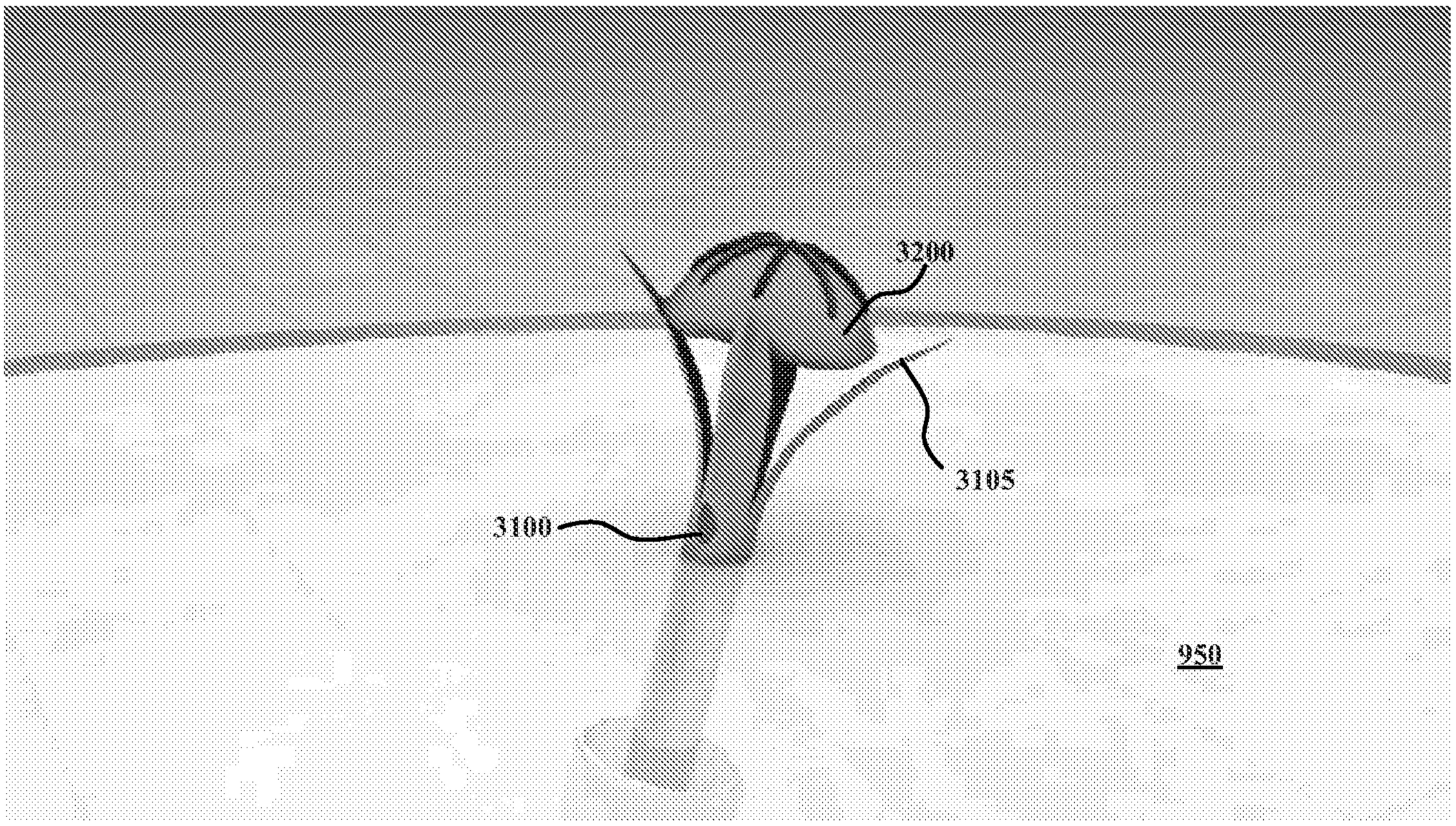

FIG. 3B

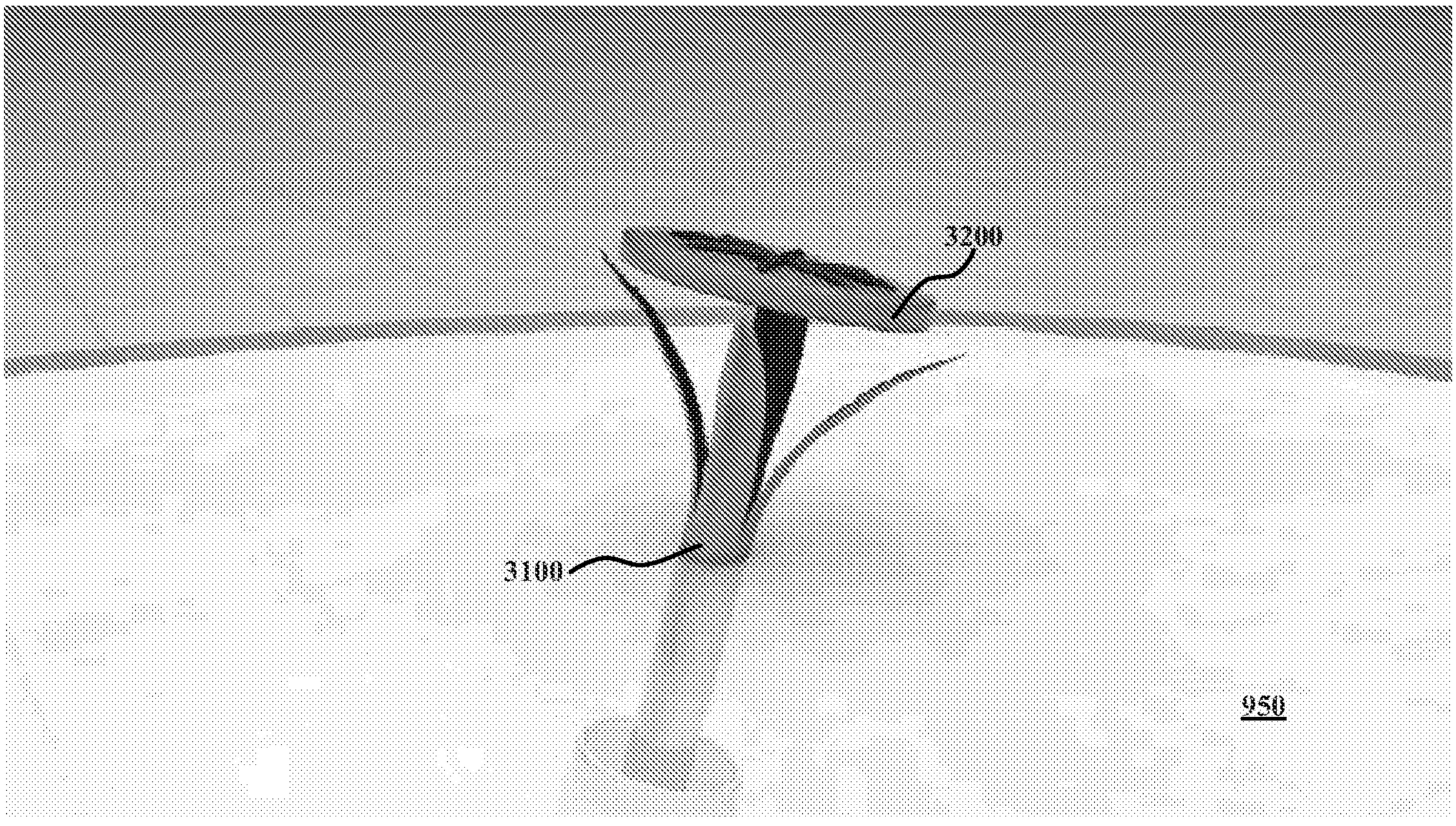

FIG. 3C

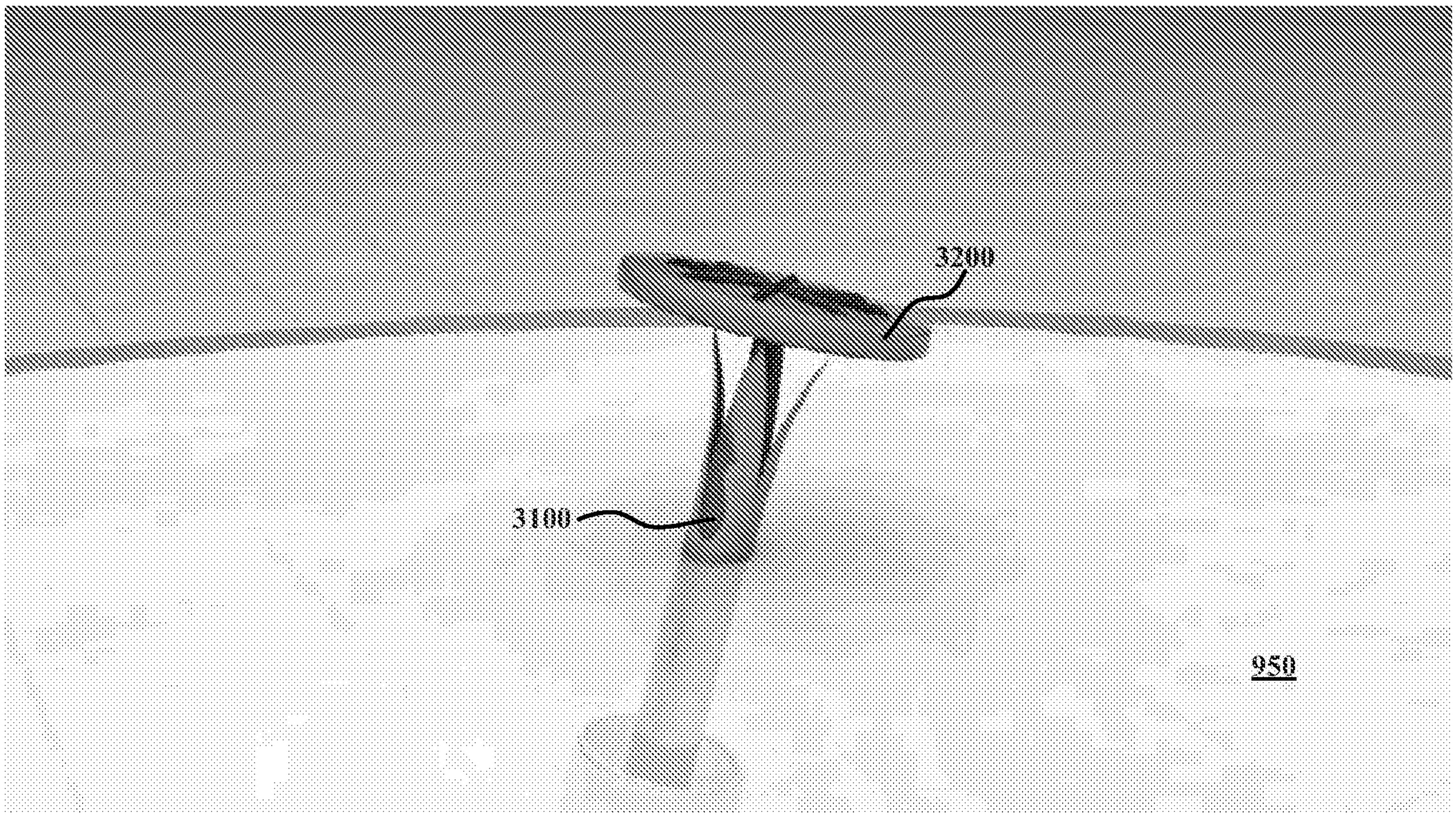

FIG. 4A

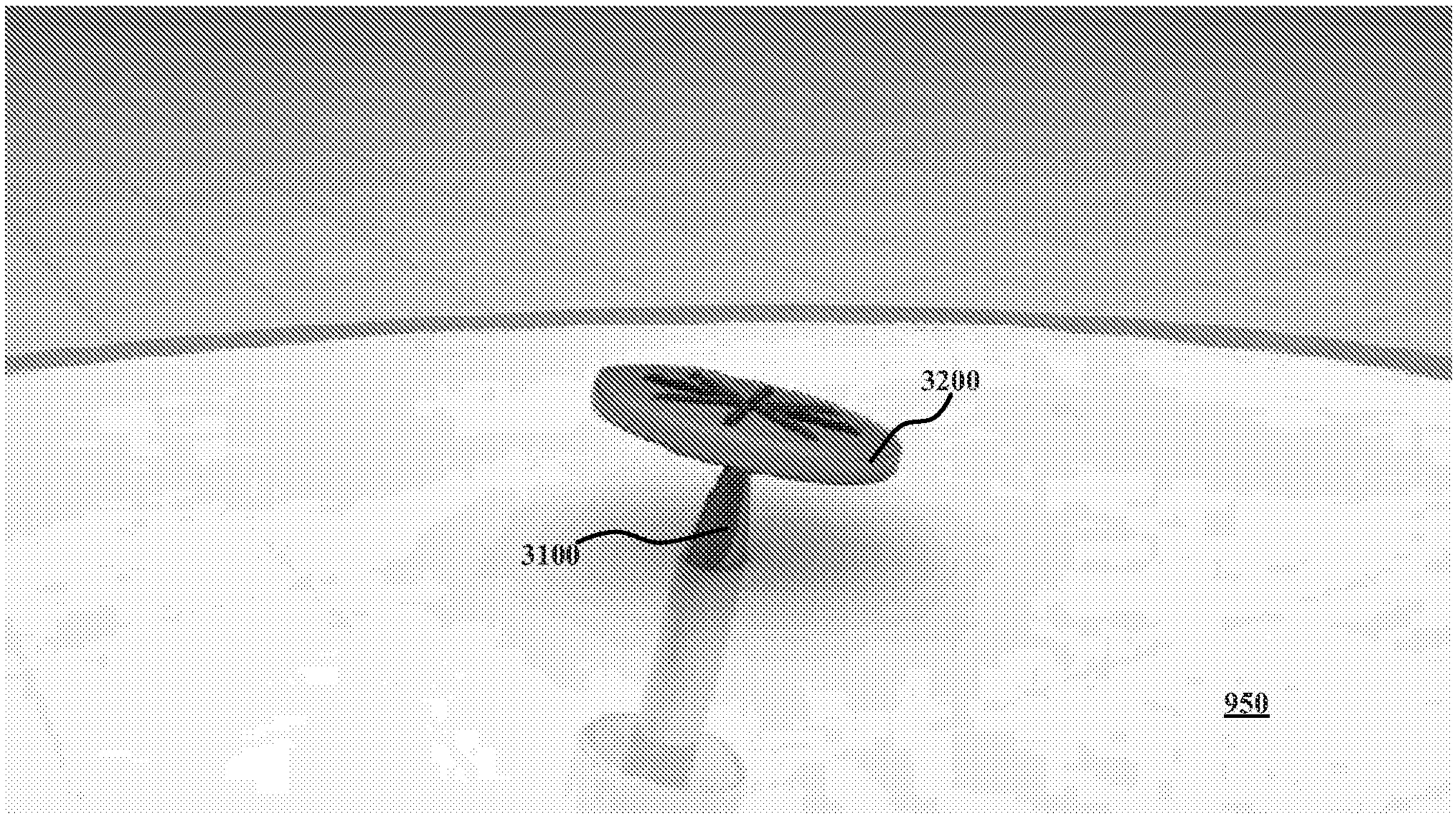

FIG. 4B

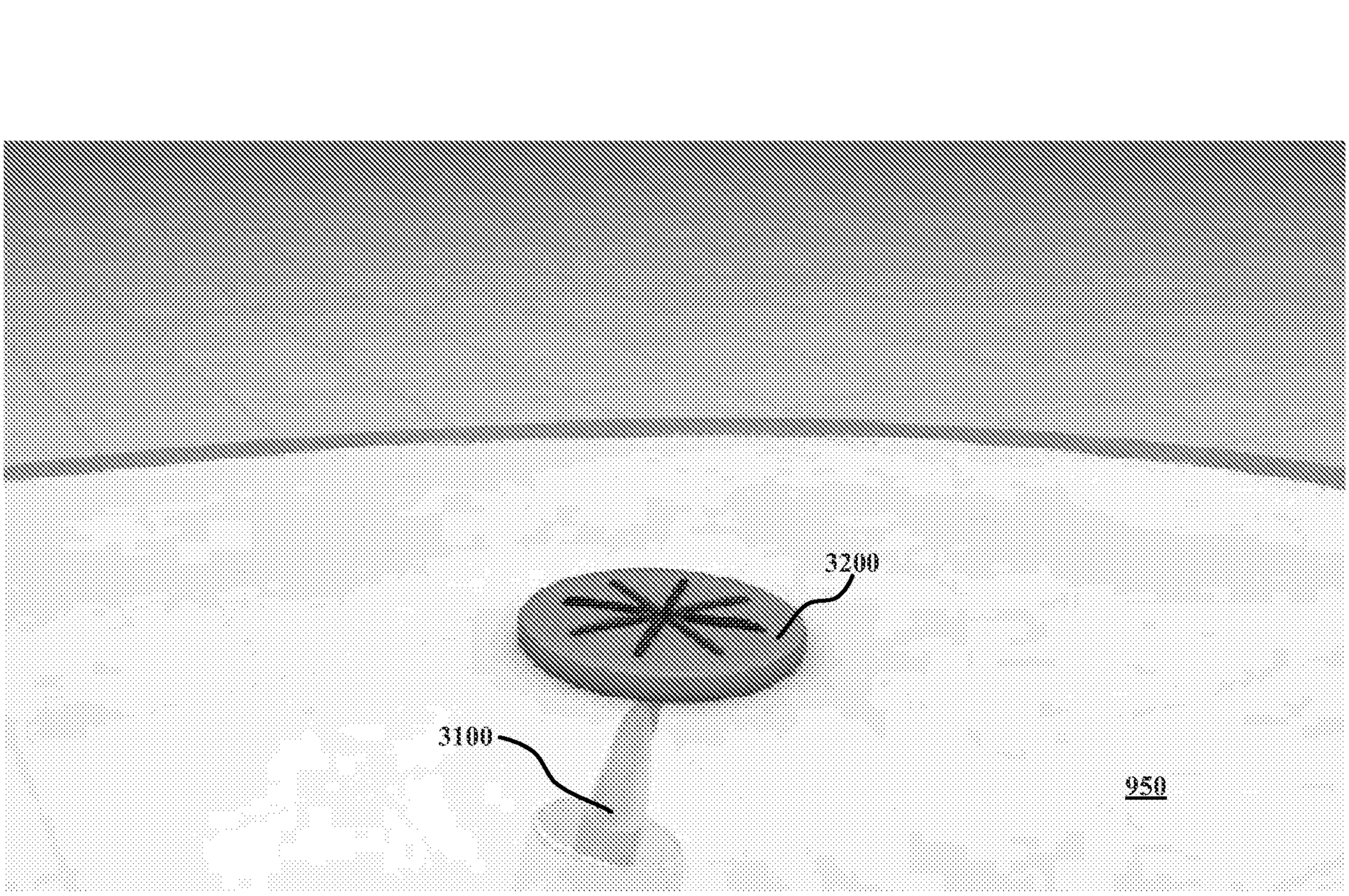

FIG. 4C

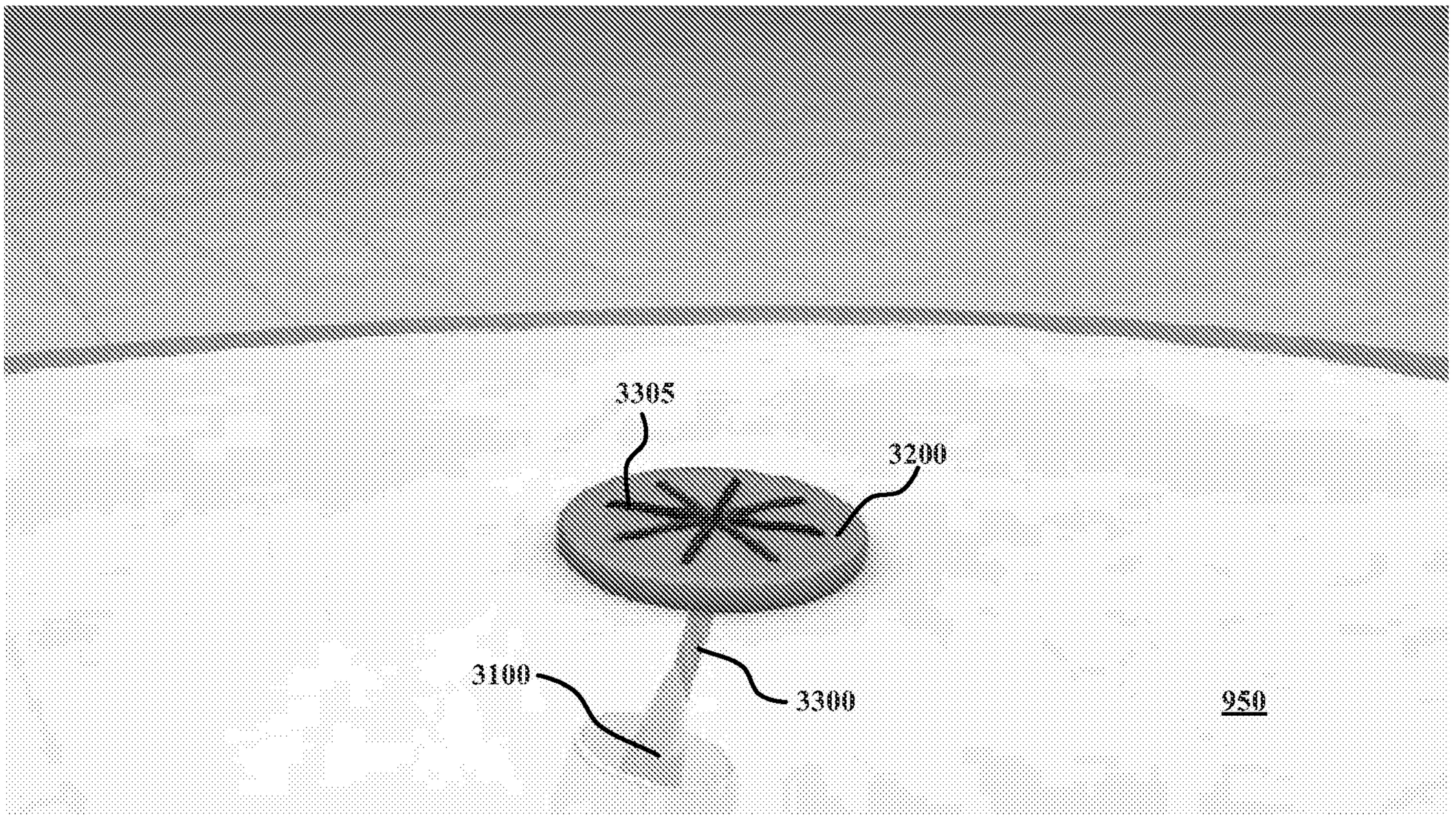

FIG. 4D

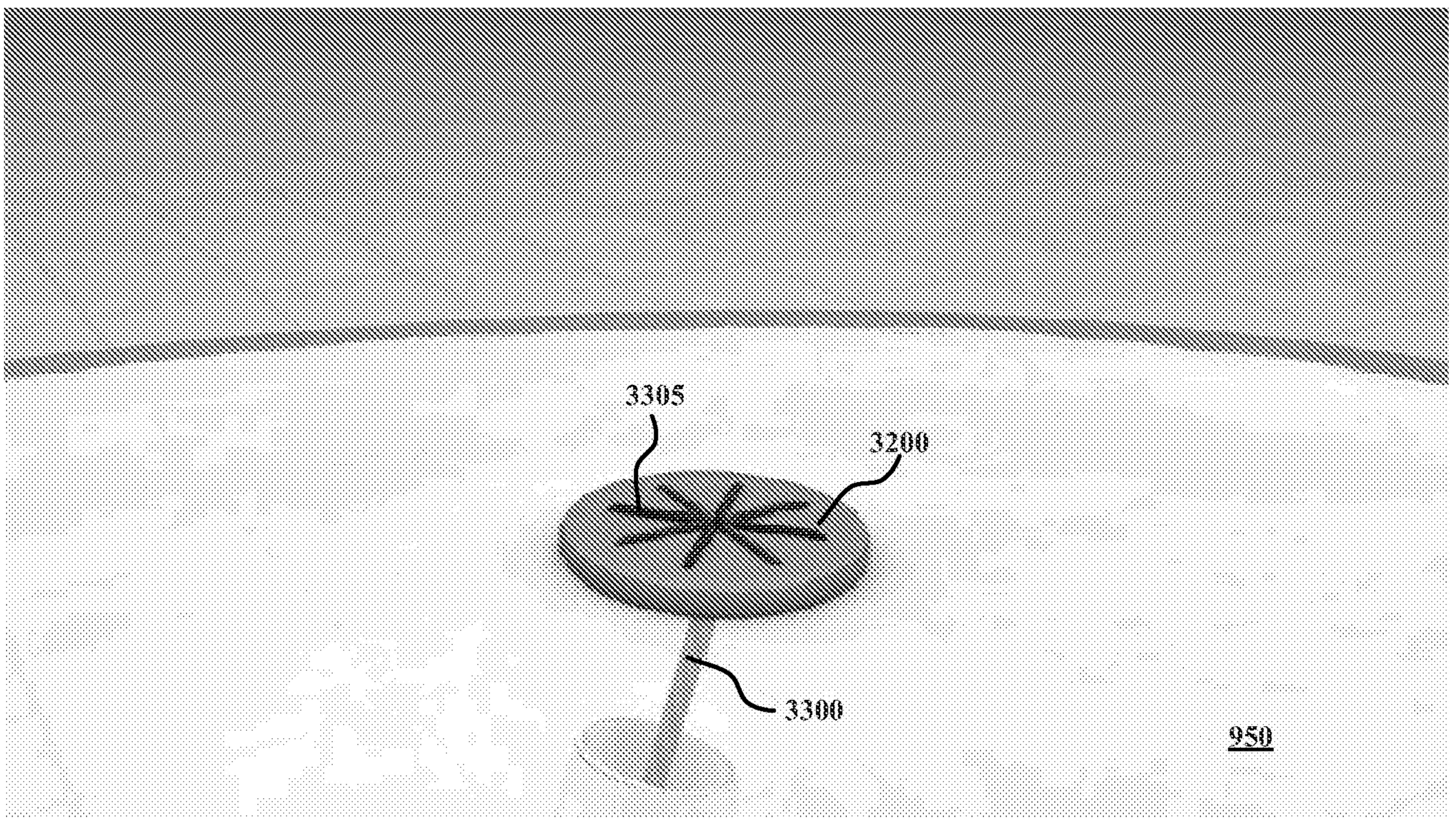

FIG. 4E

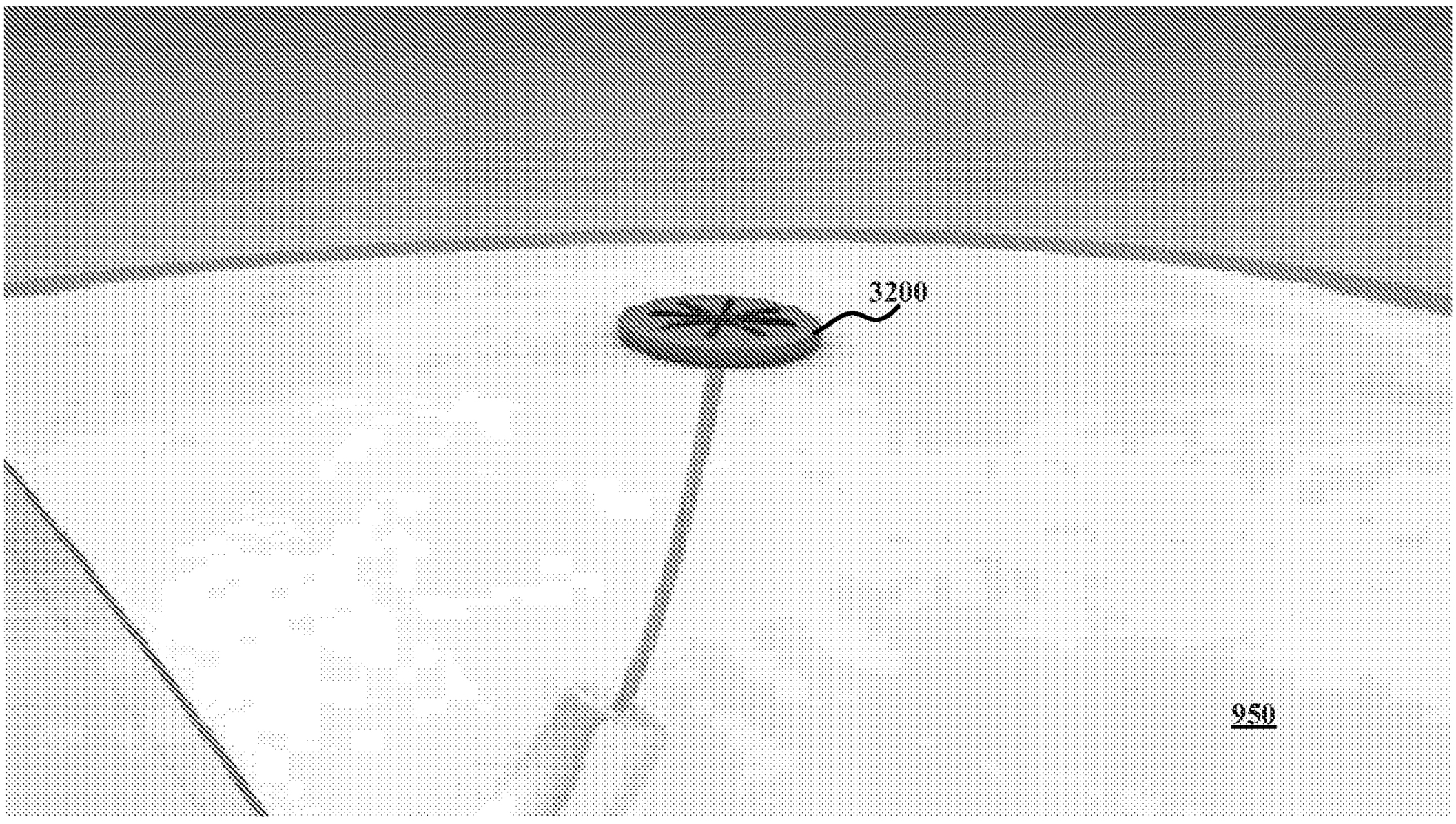

FIG. 5A

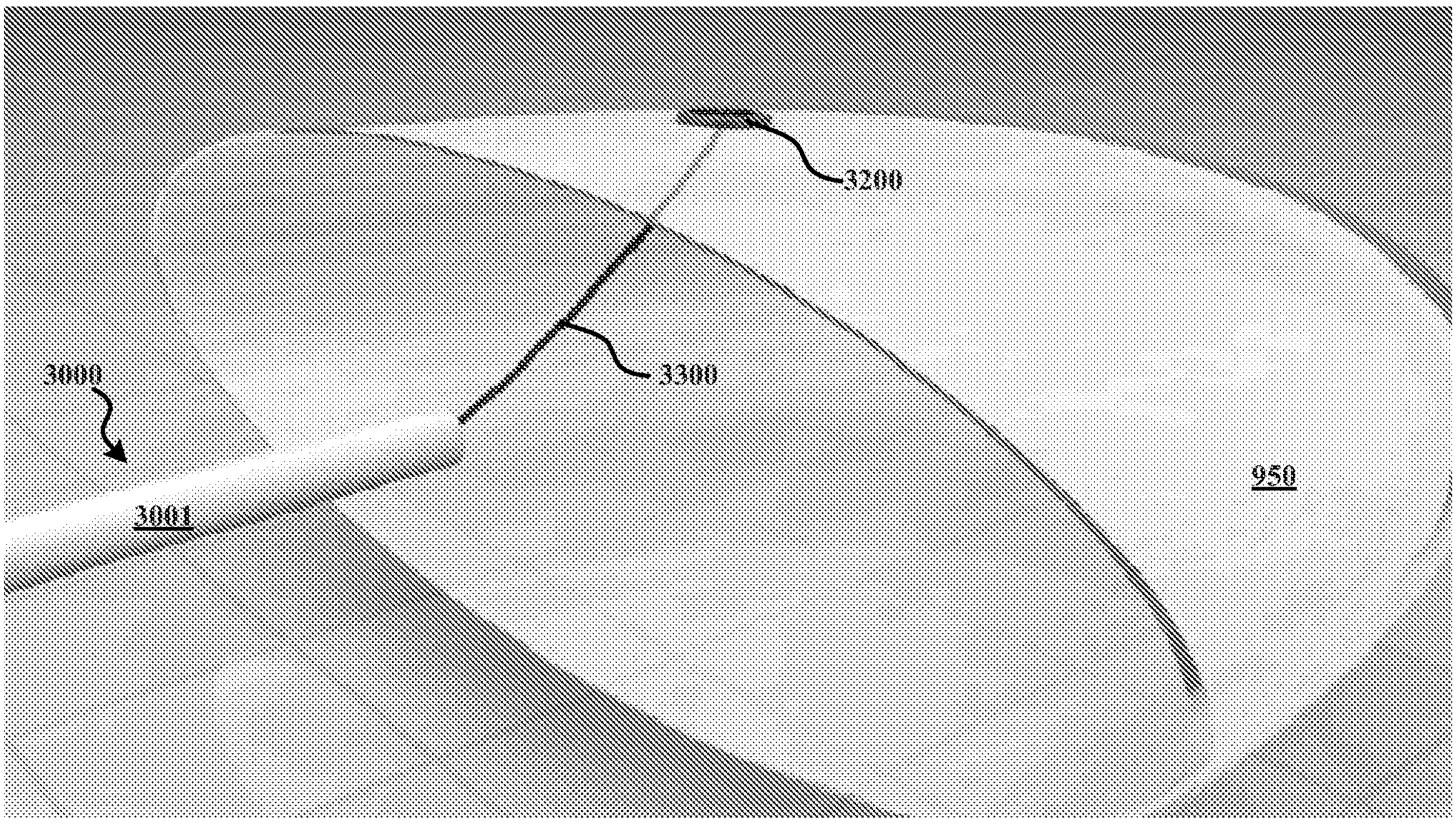

FIG. 5B

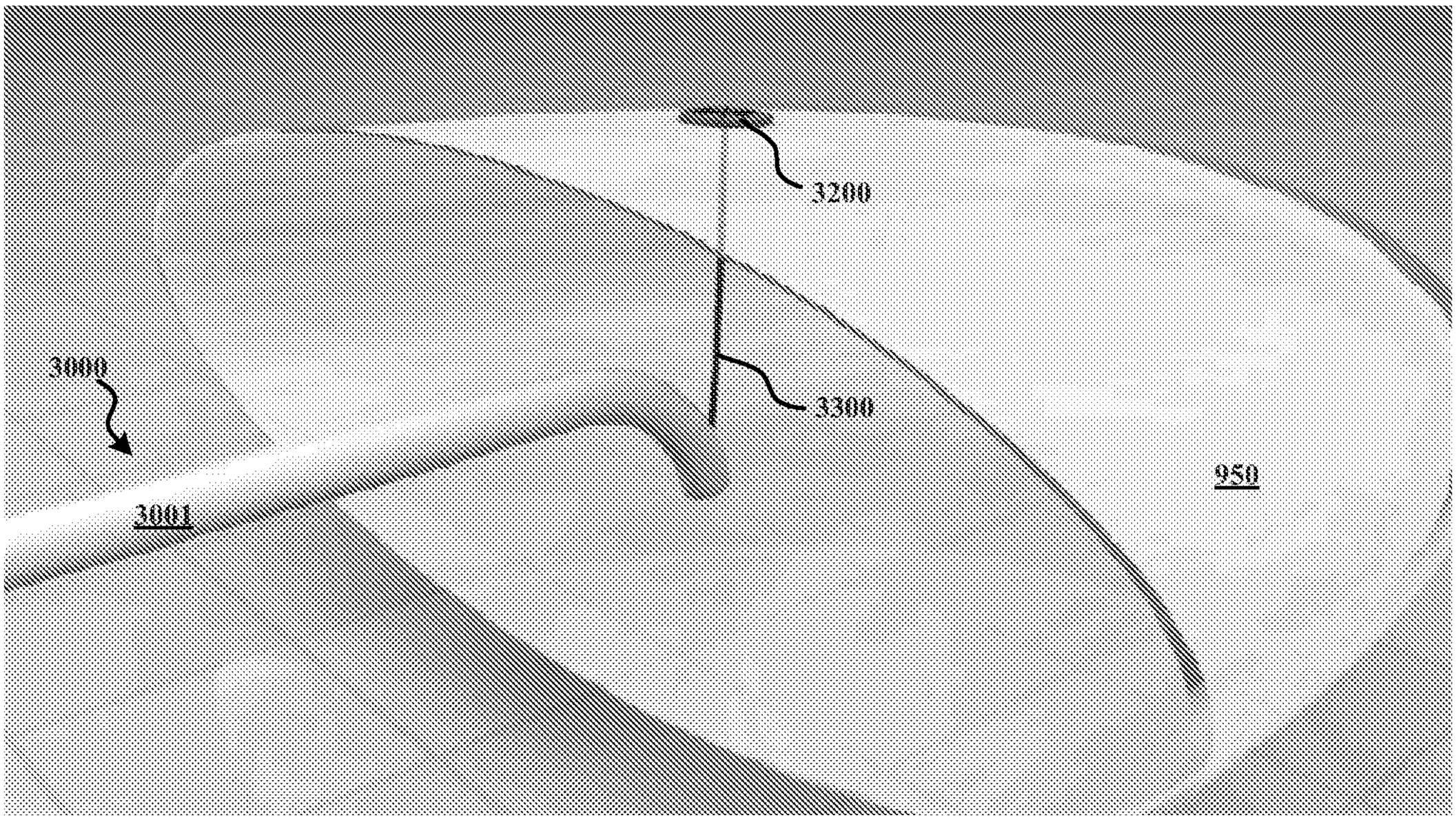

FIG. 6A

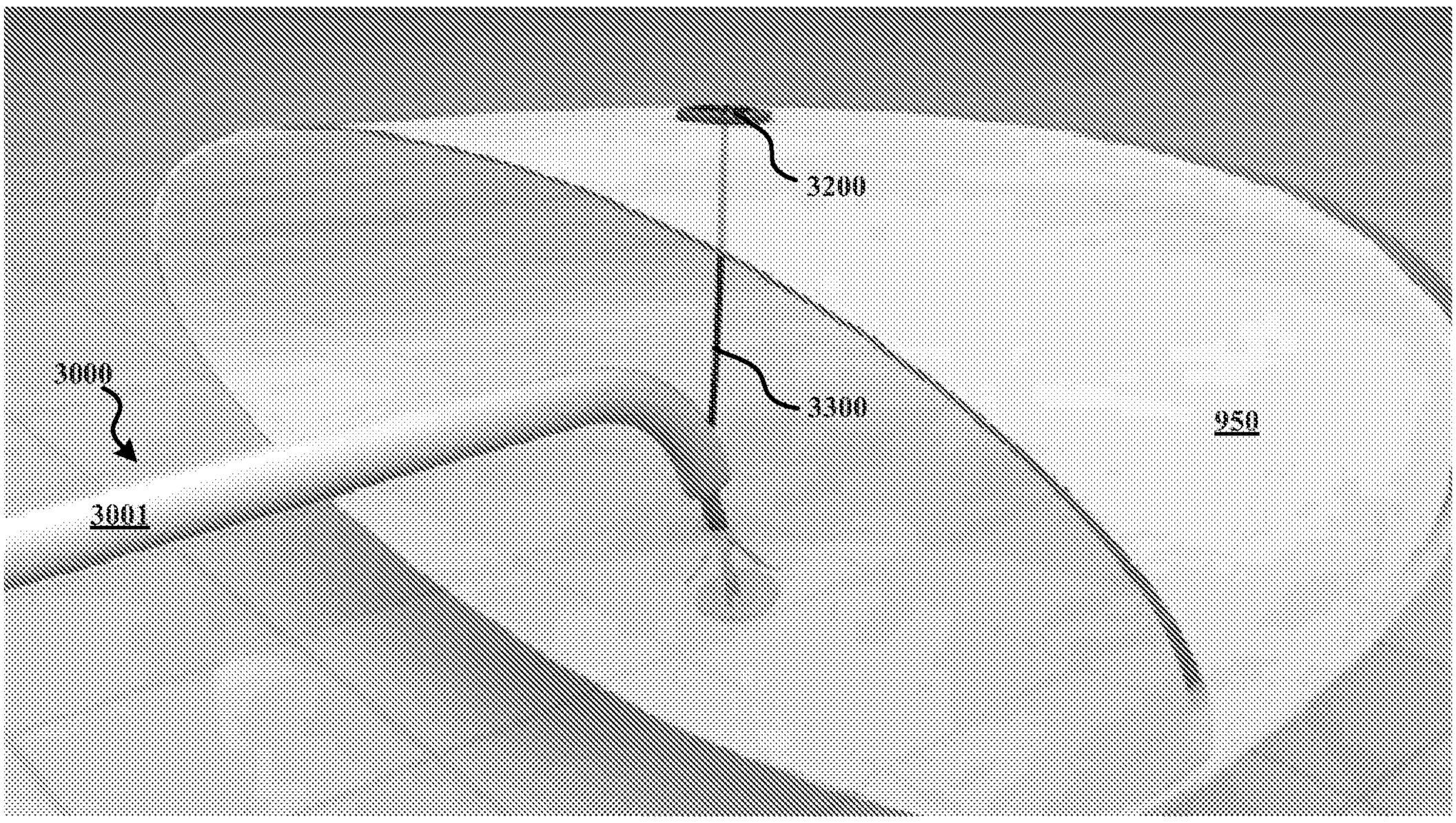

FIG. 6B

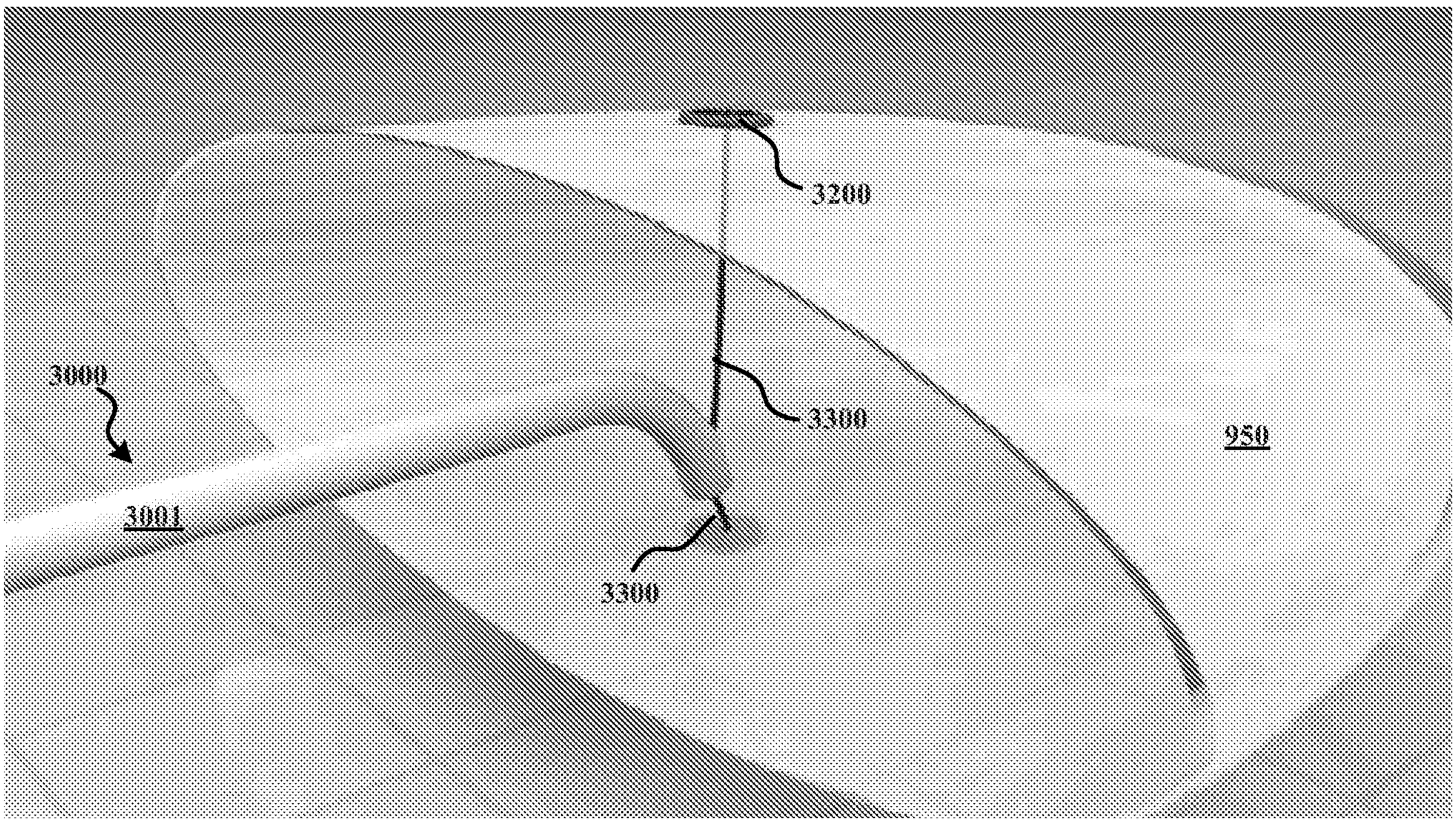

FIG. 6C

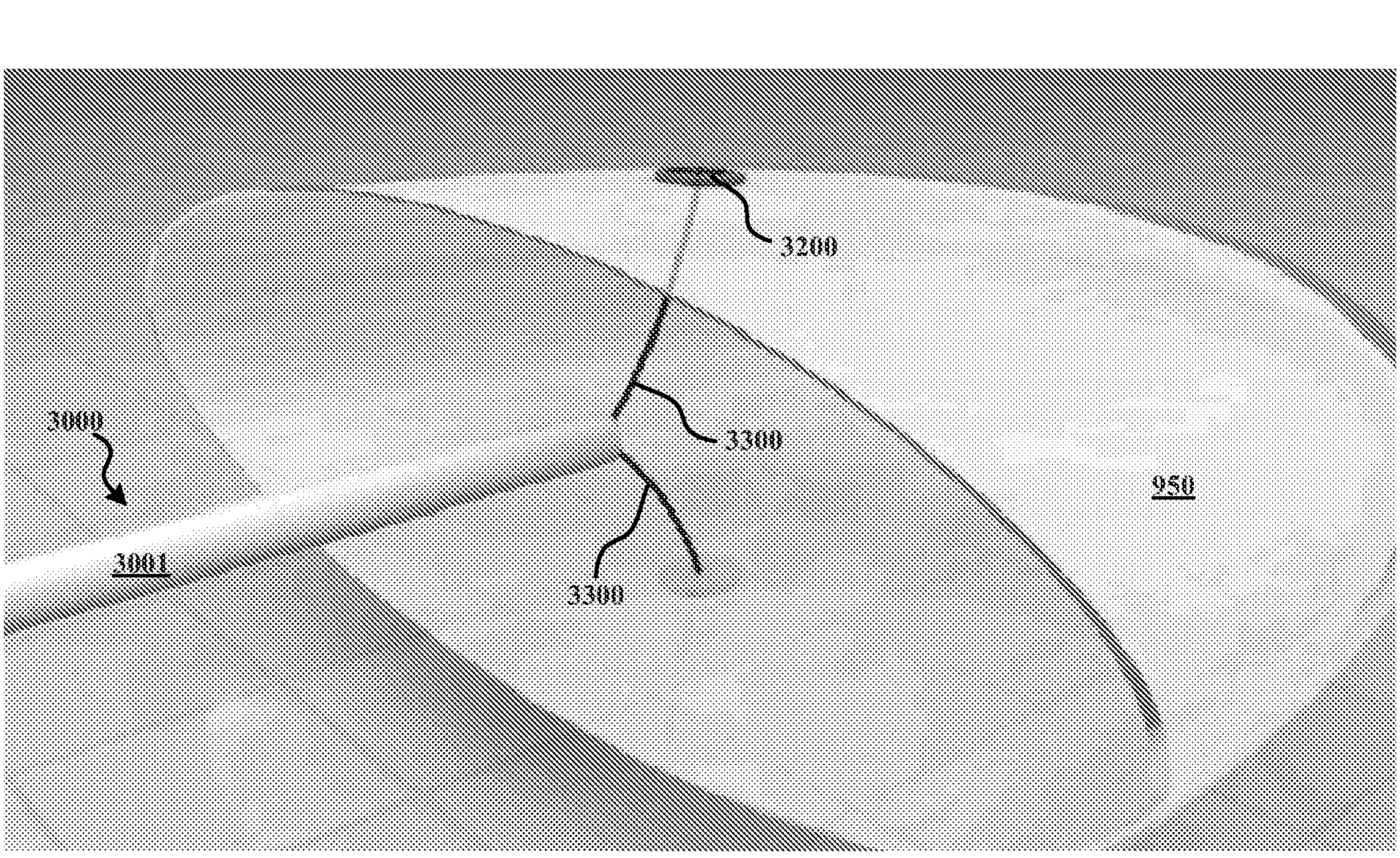

FIG. 7A

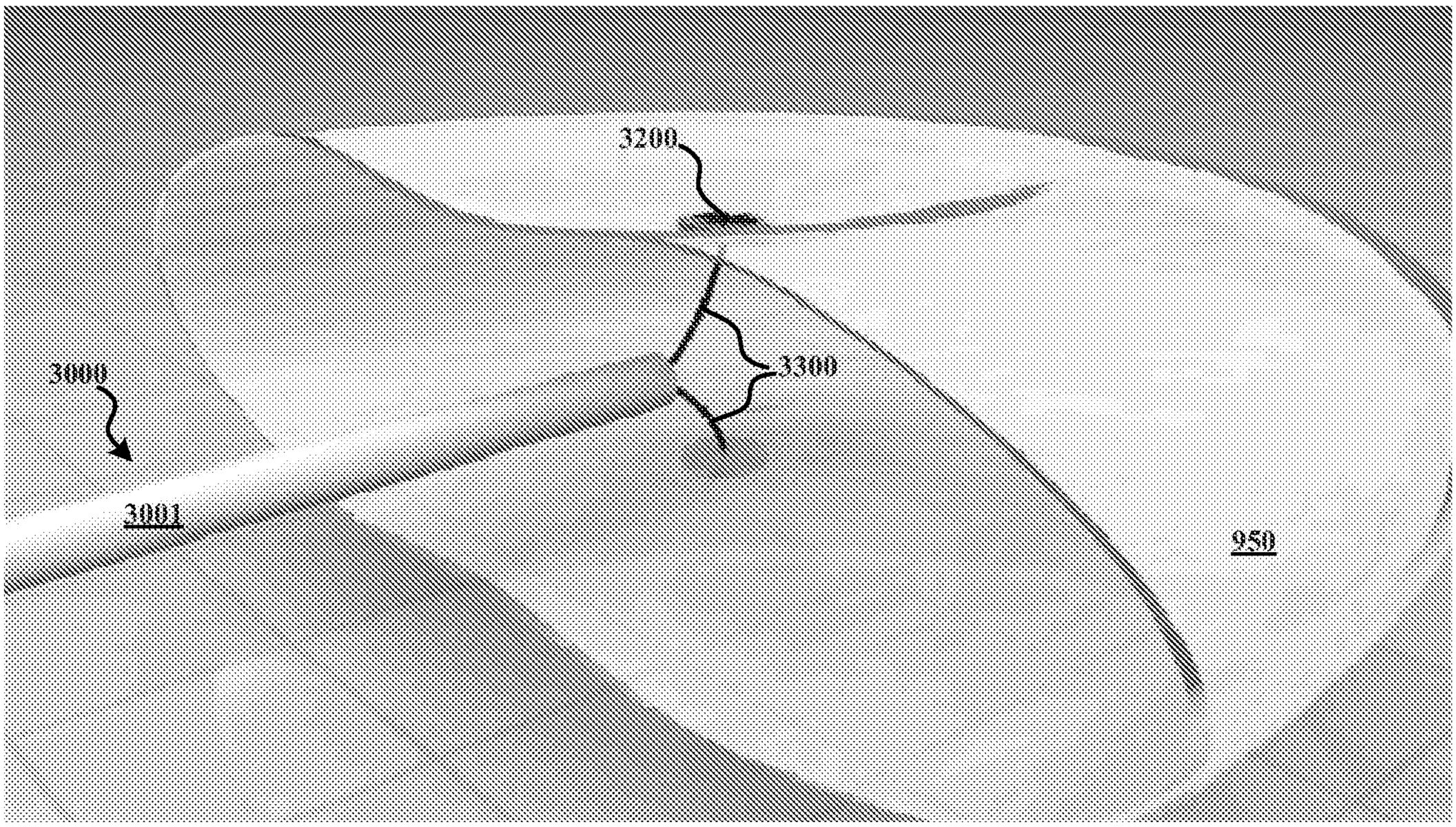

FIG. 7B

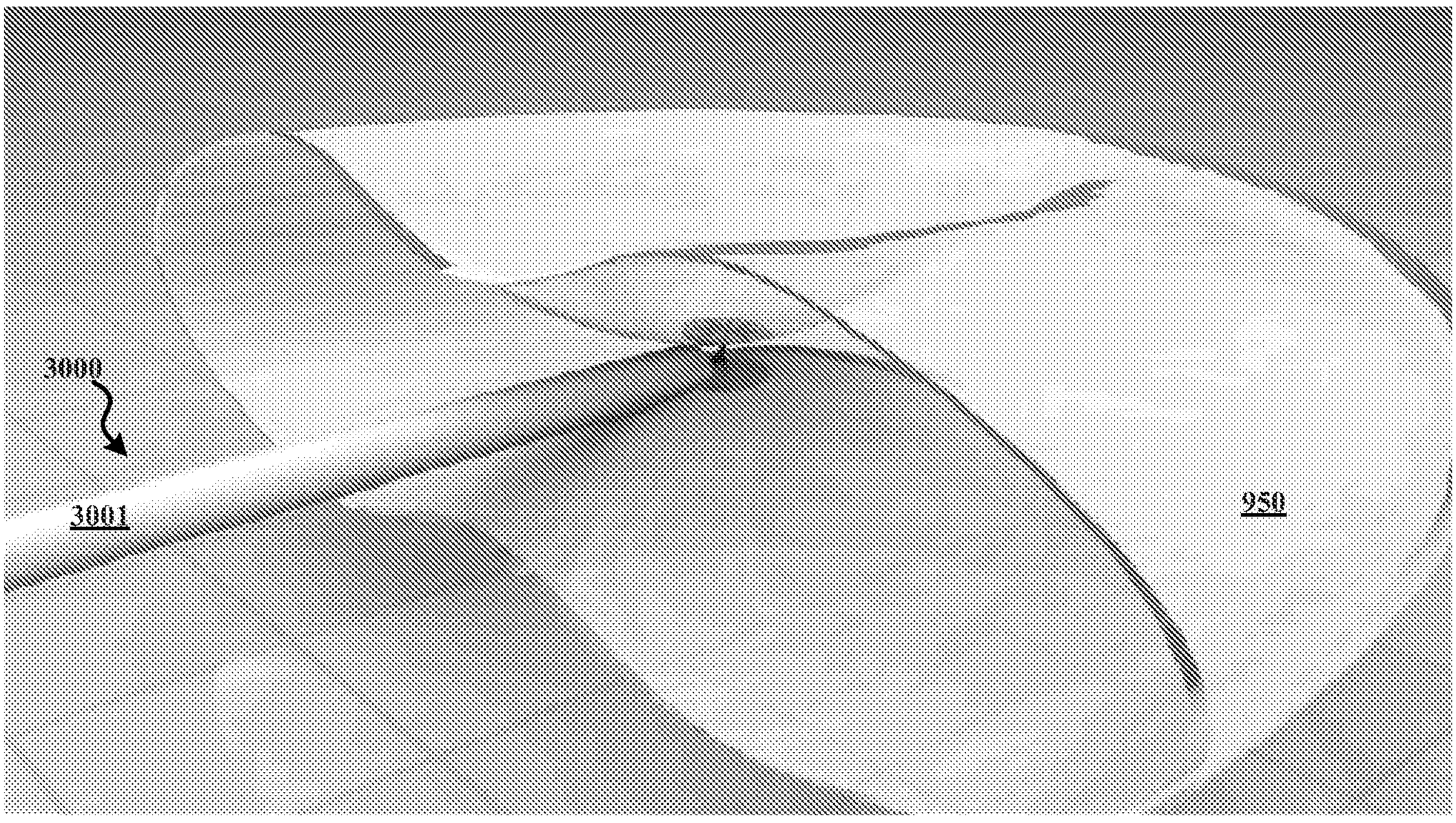

FIG. 7C

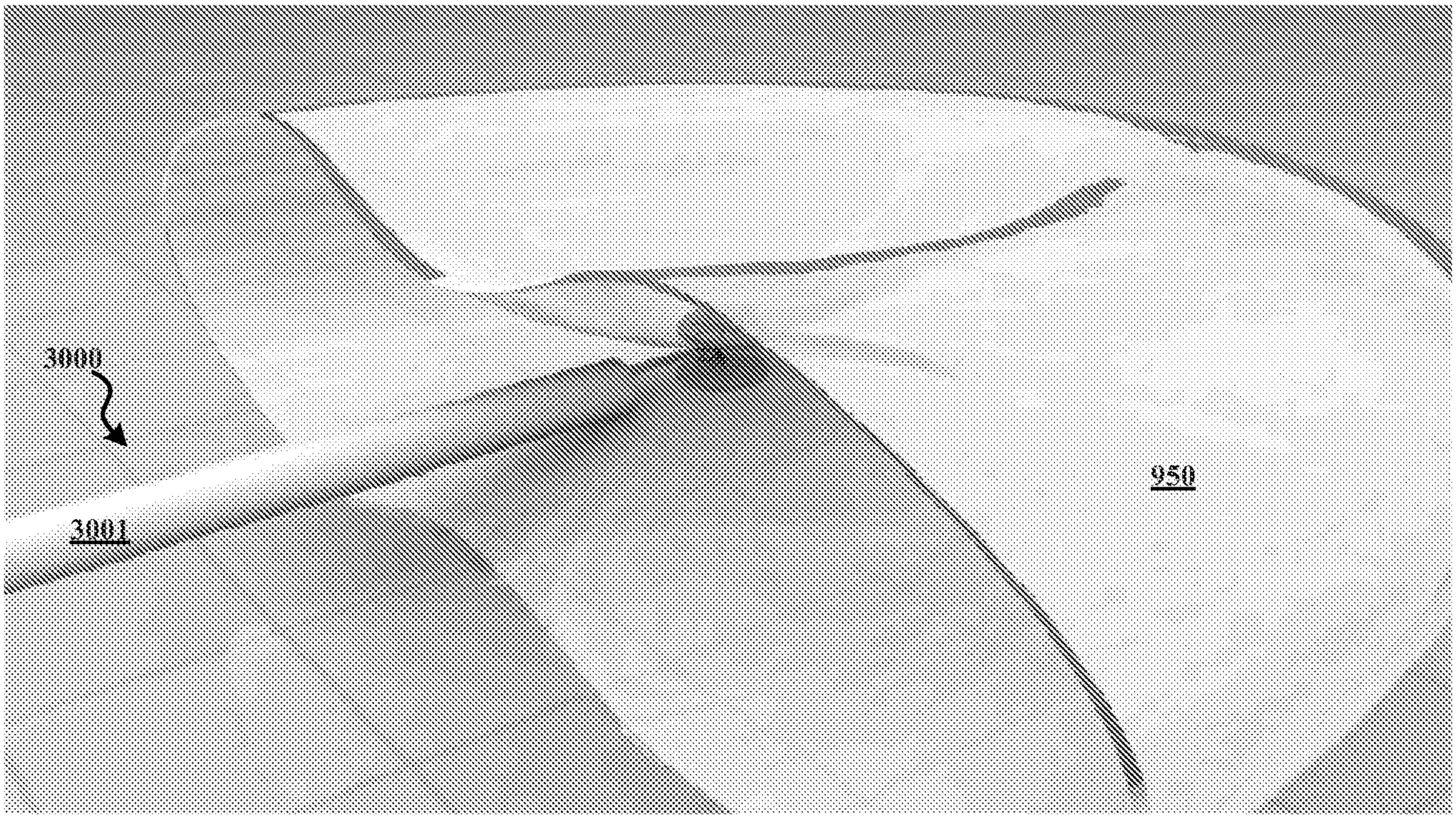

FIG. 7D

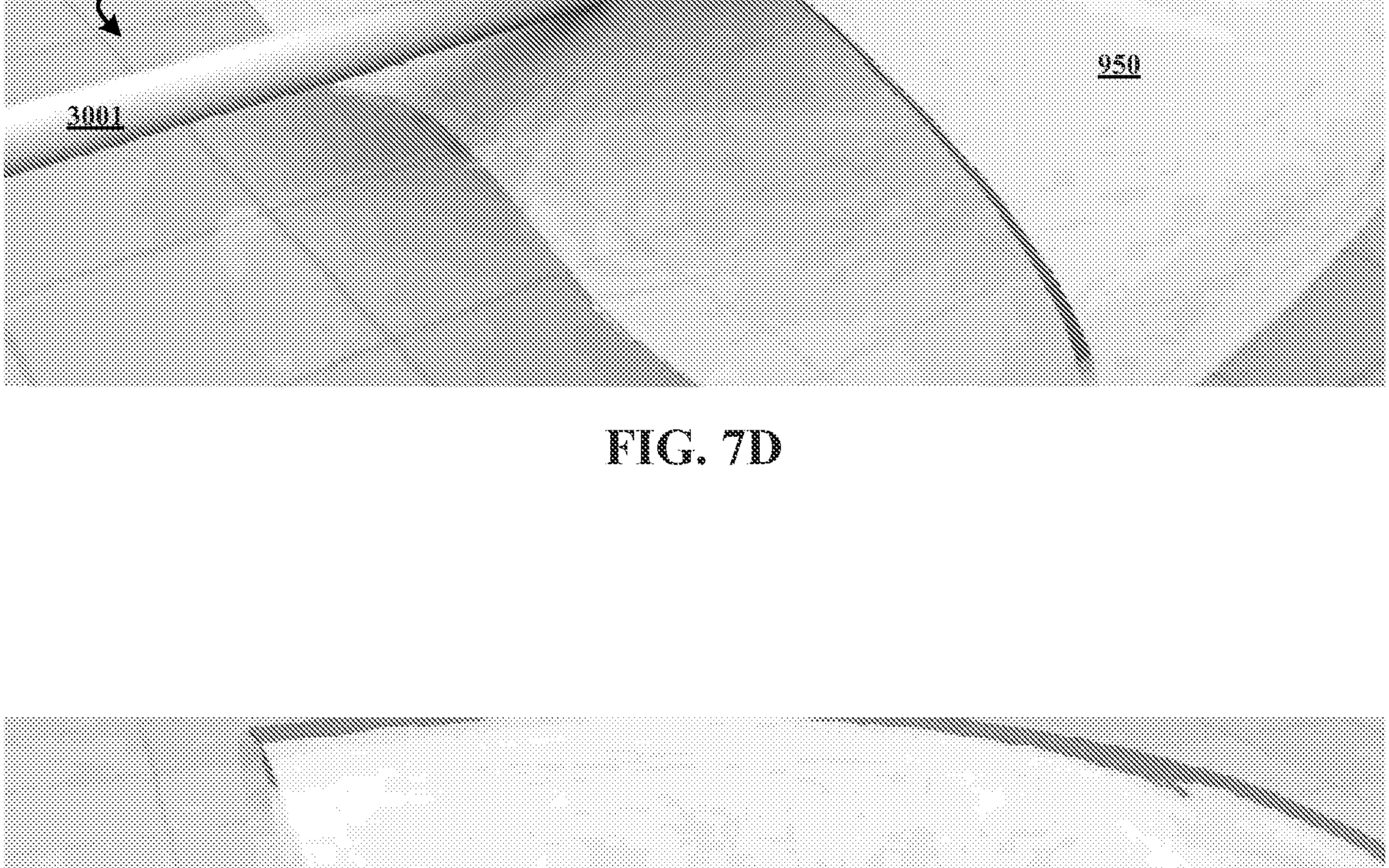

FIG. 7E

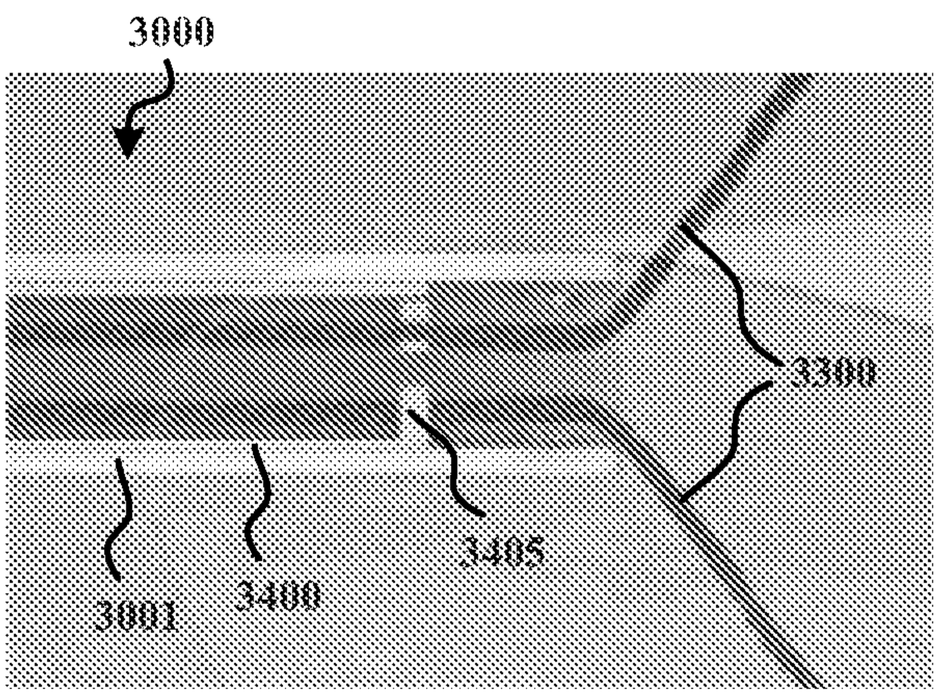

FIG. 8A

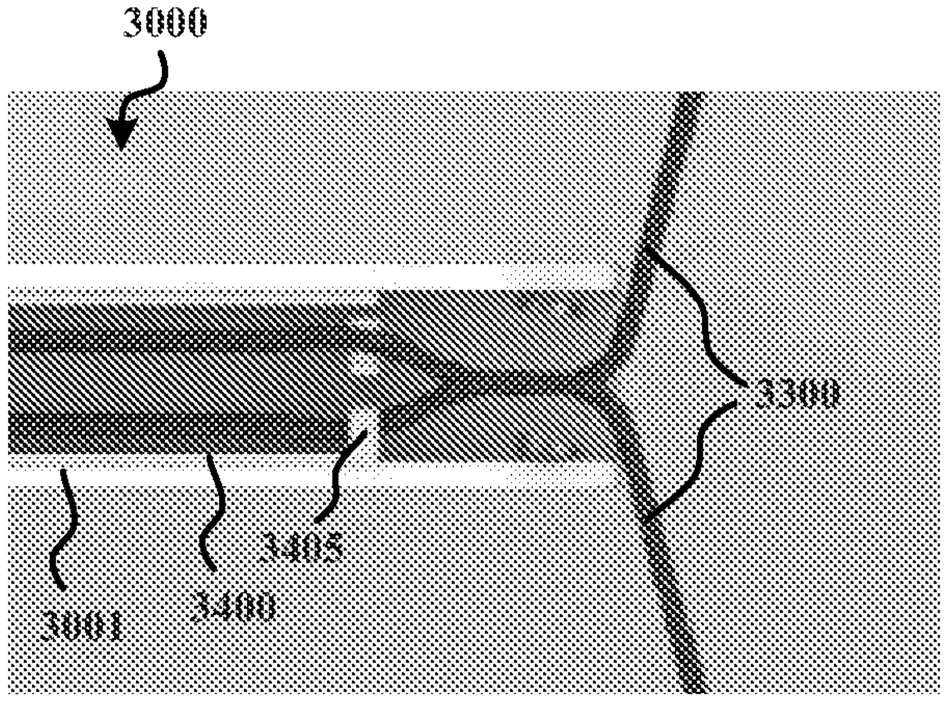

FIG. 8B

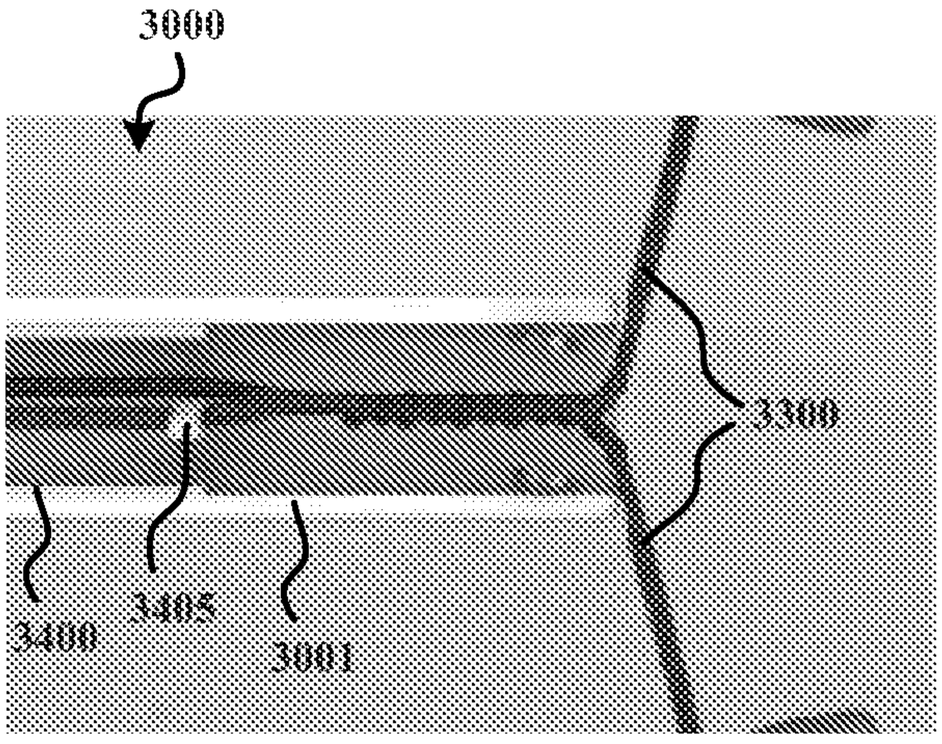

FIG. 8C

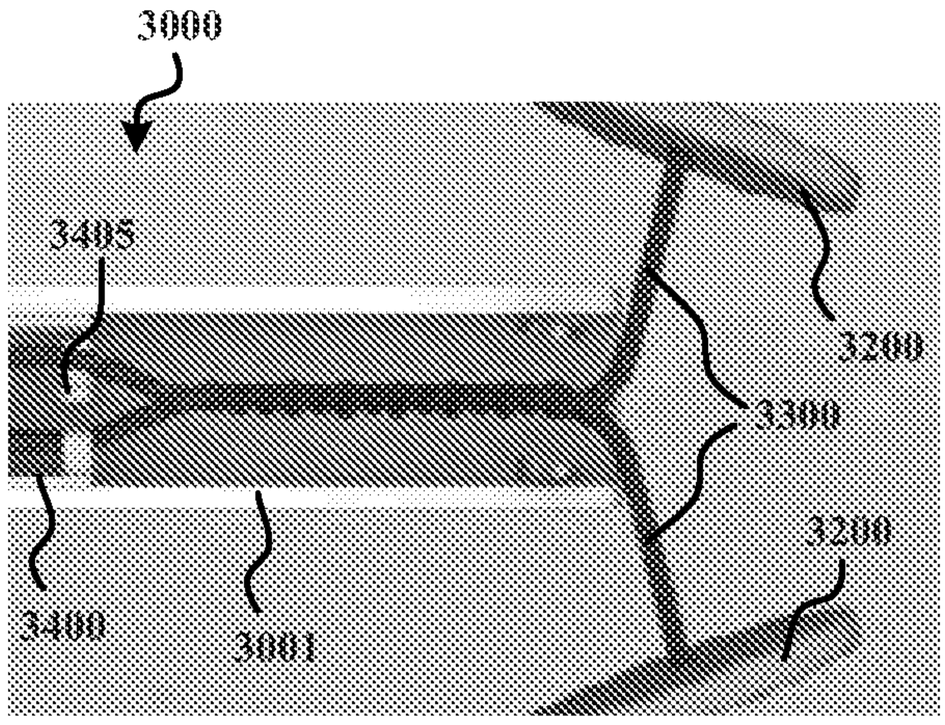

FIG. 8D

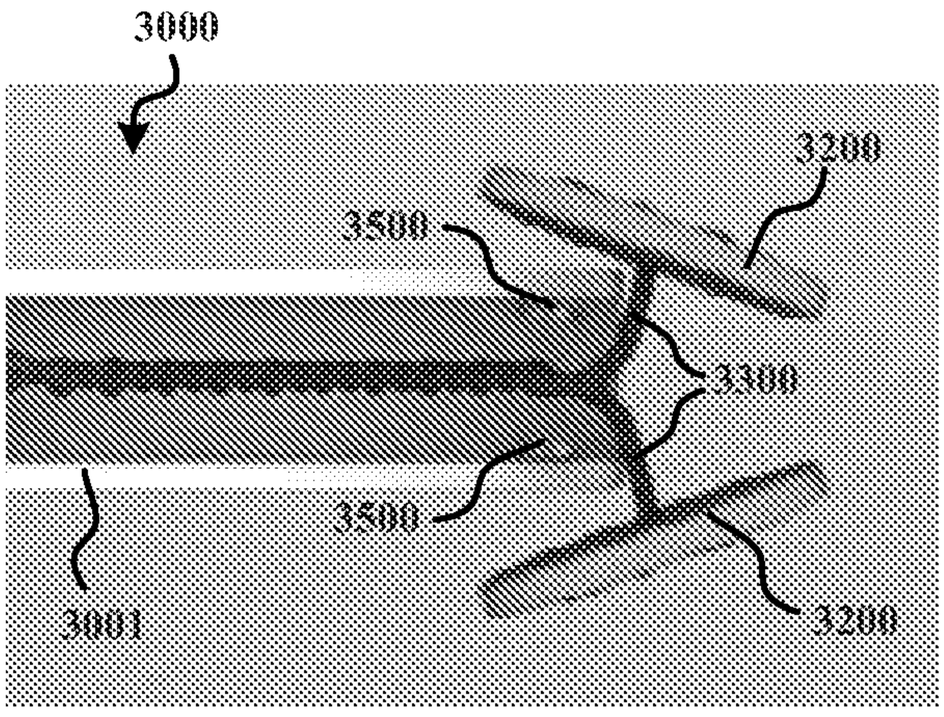

FIG. 8E

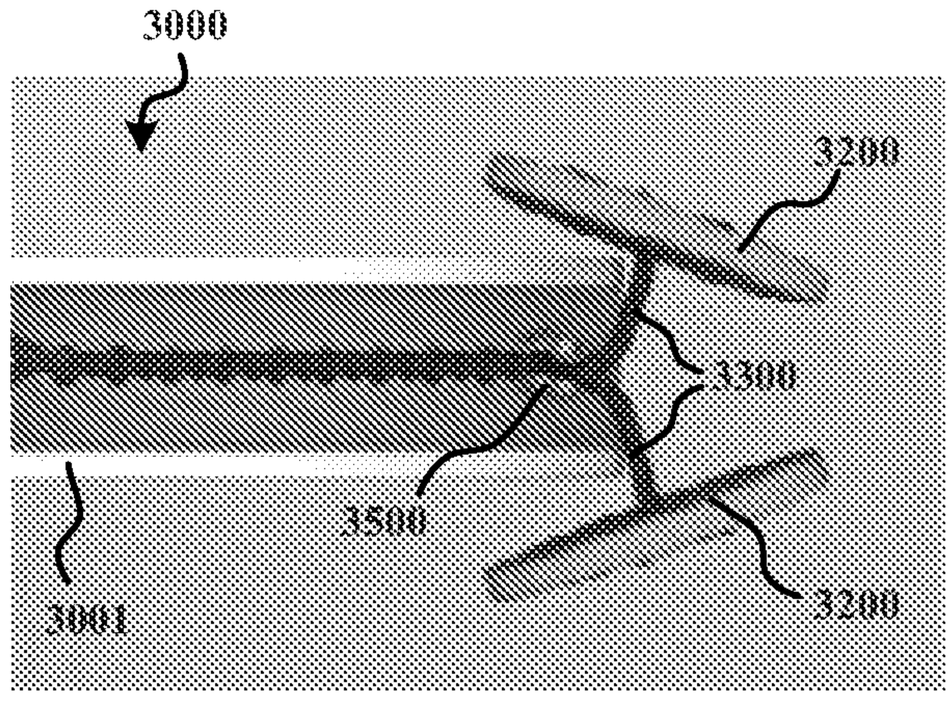

FIG. 8F

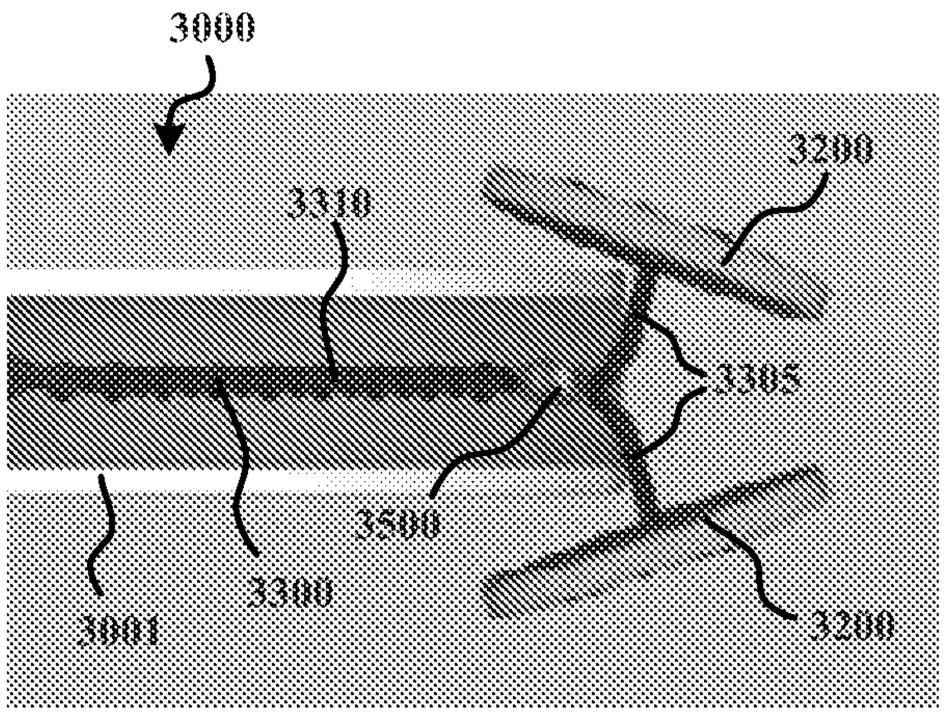

FIG. 8G

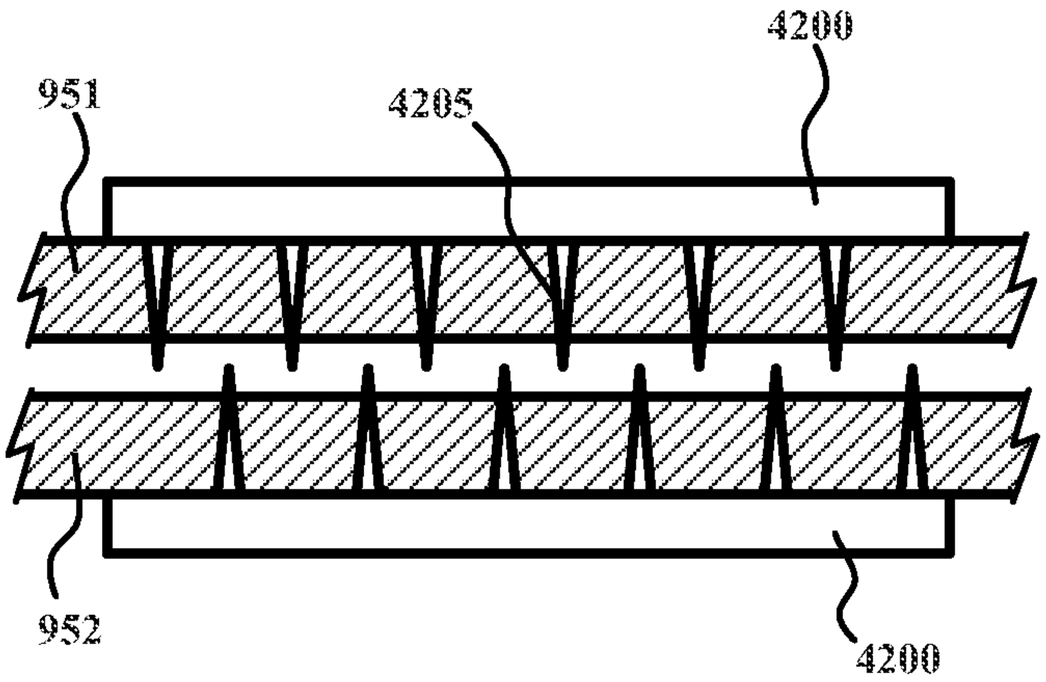

FIG. 9

SUBSTITUTE SHEET (RULE 26)

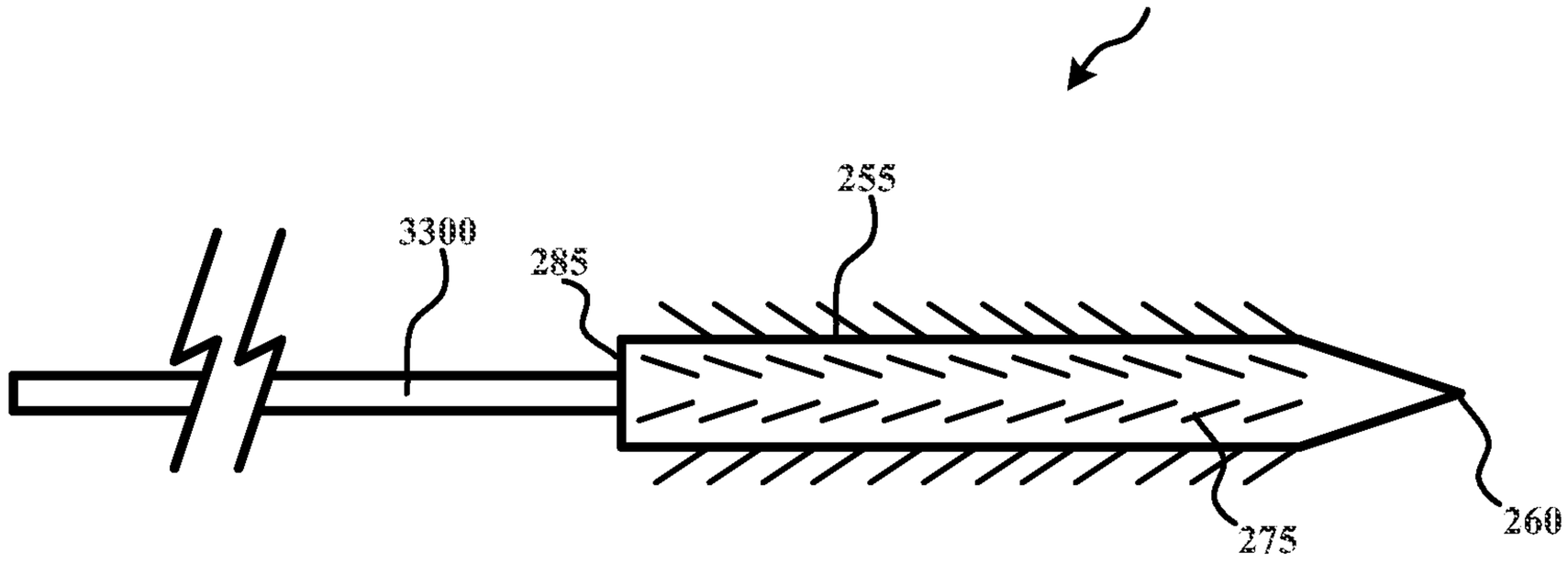

FIG. 10A

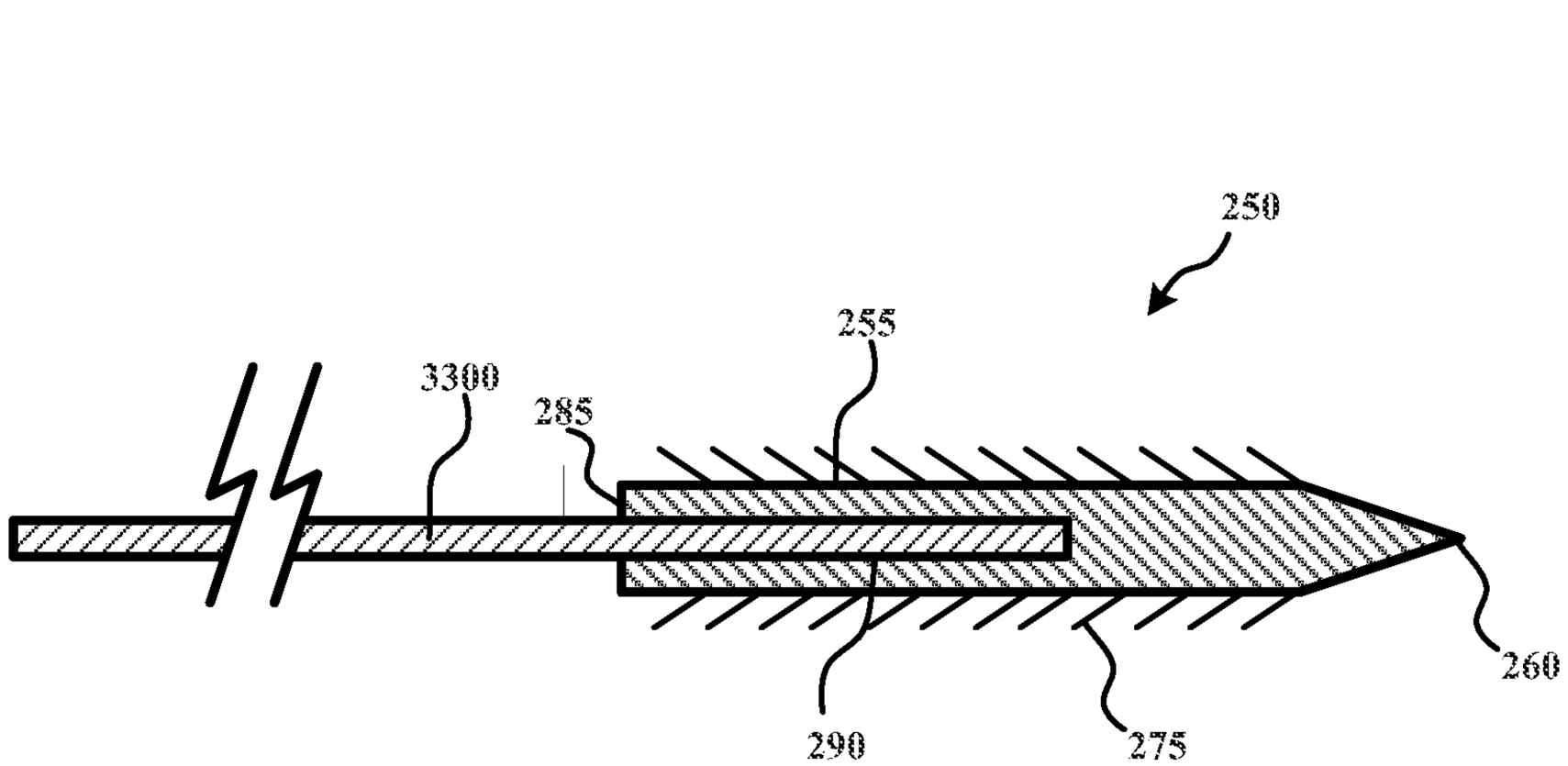

FIG. 10B

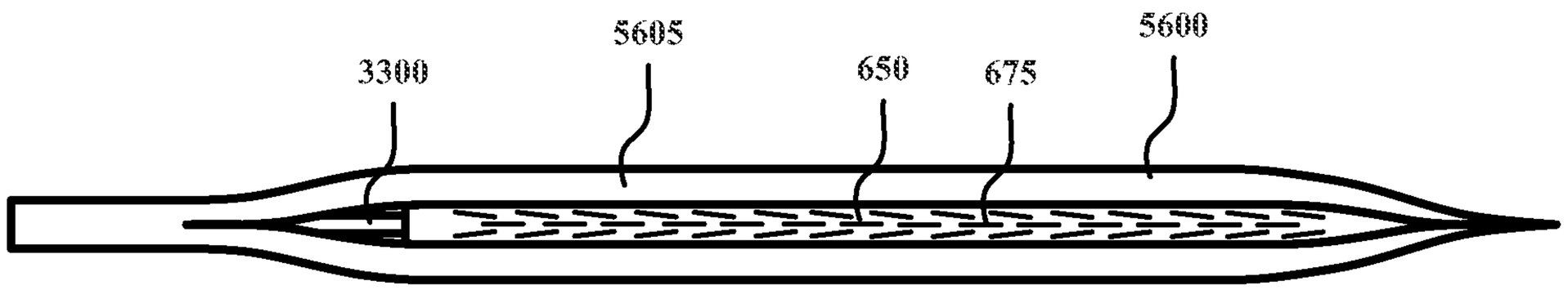

FIG. 11

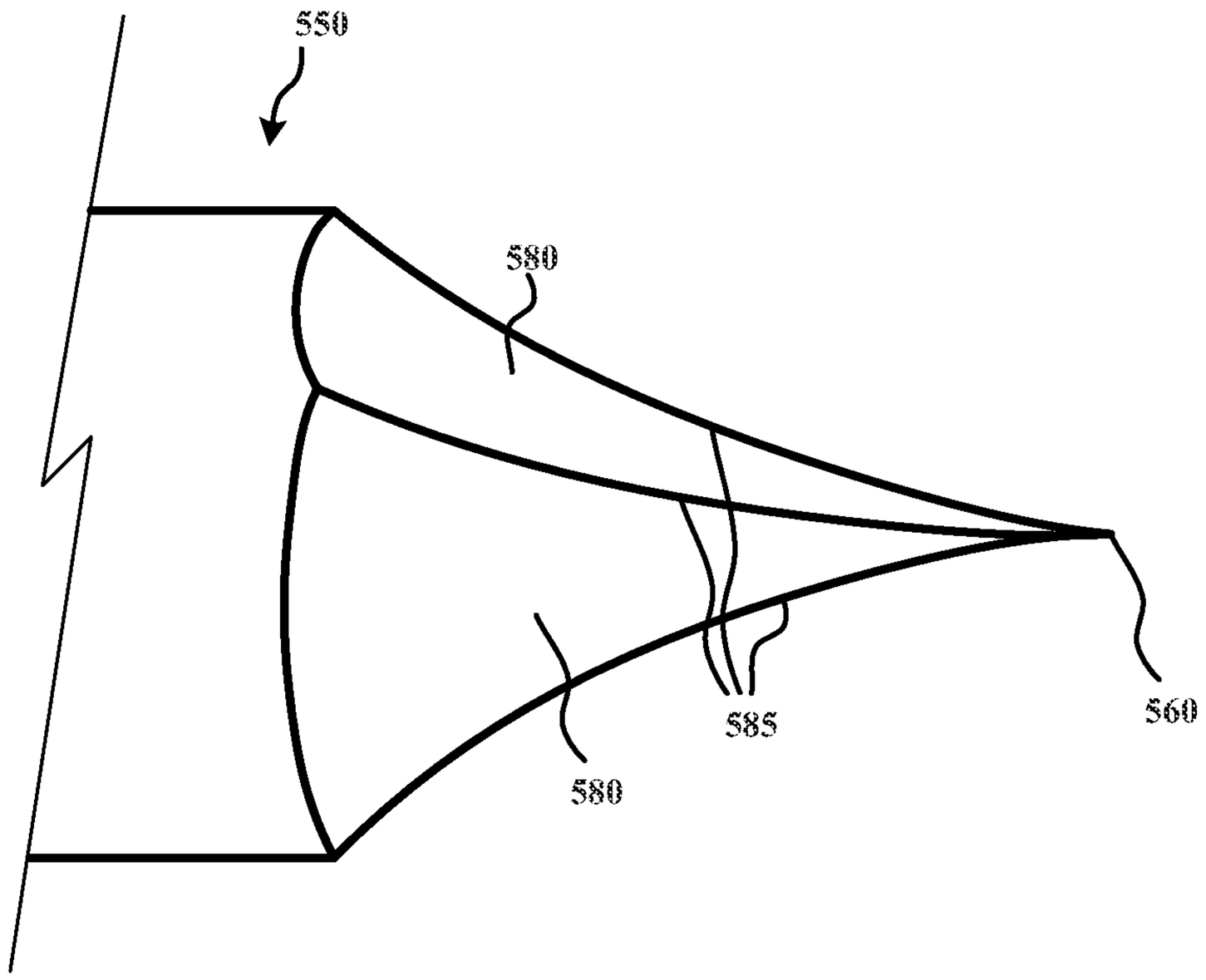

FIG. 12

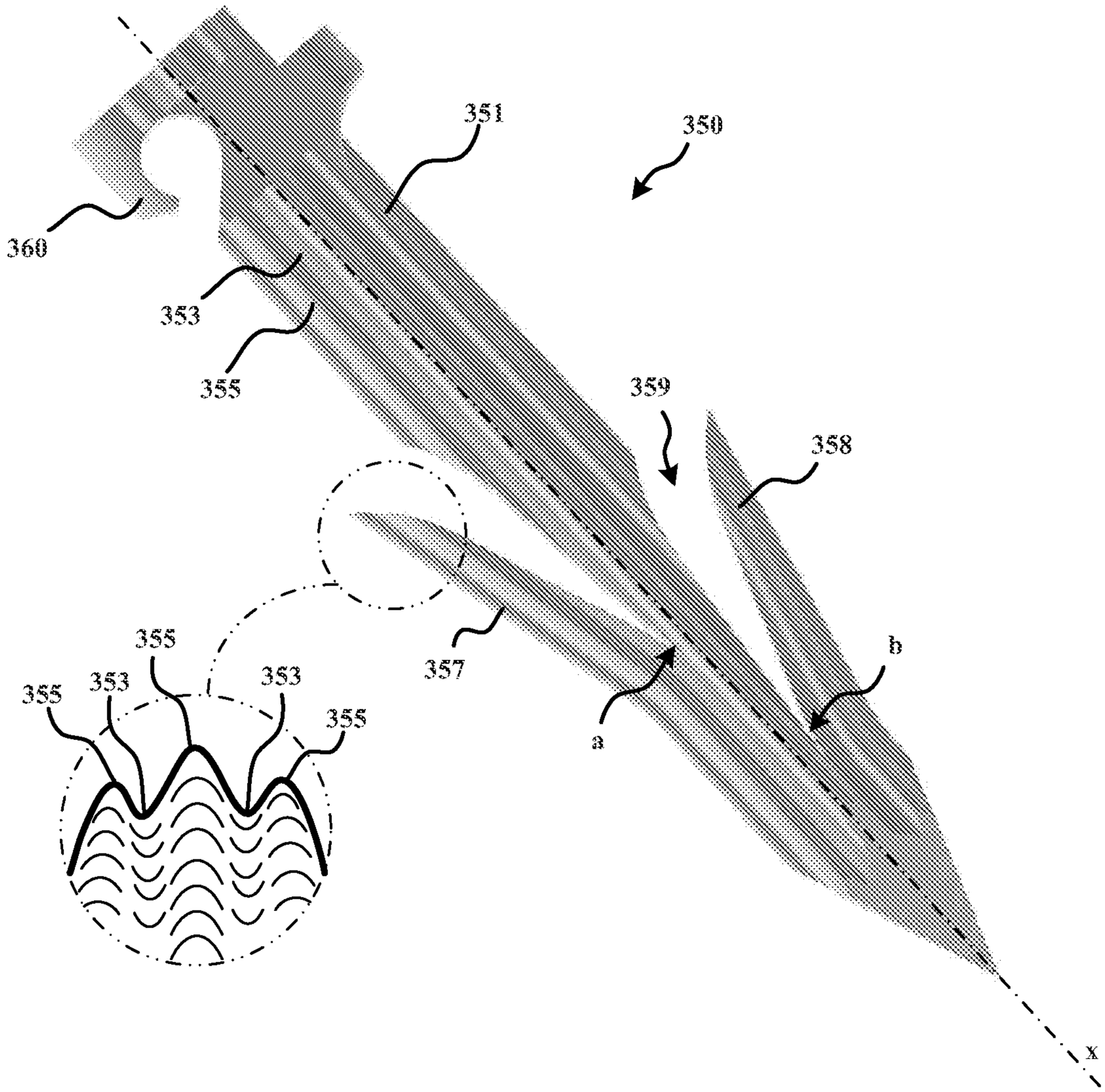

FIG. 13

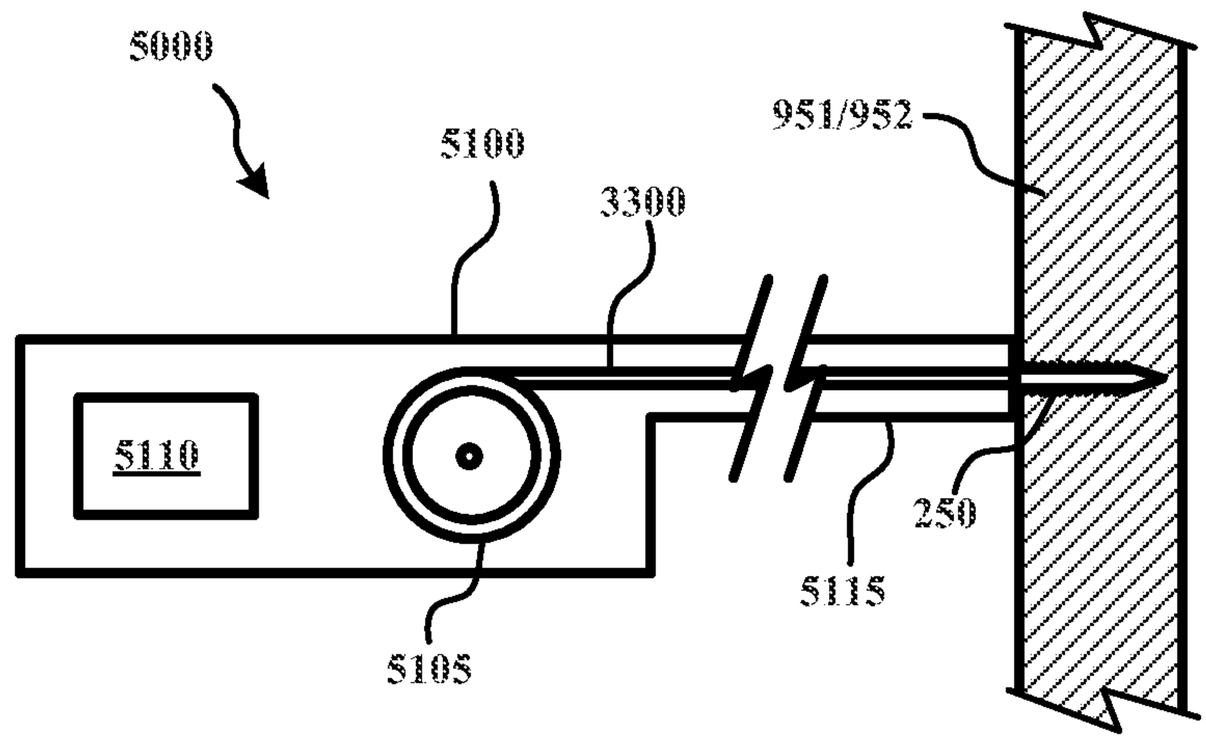

FIG. 14

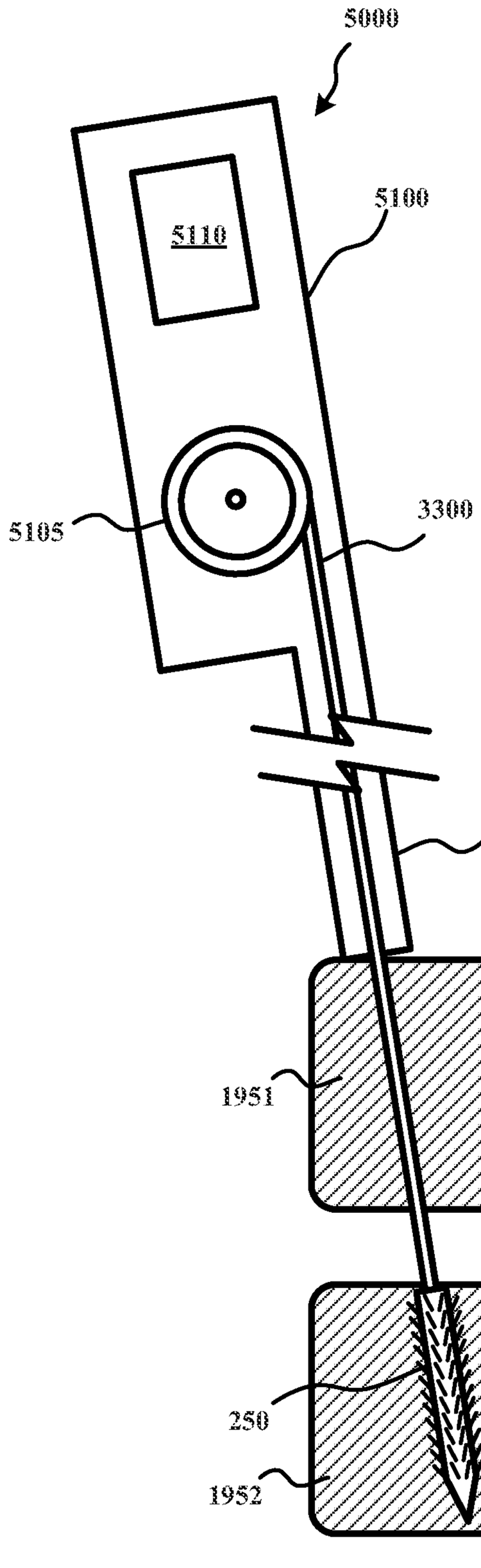

FIG. 15A

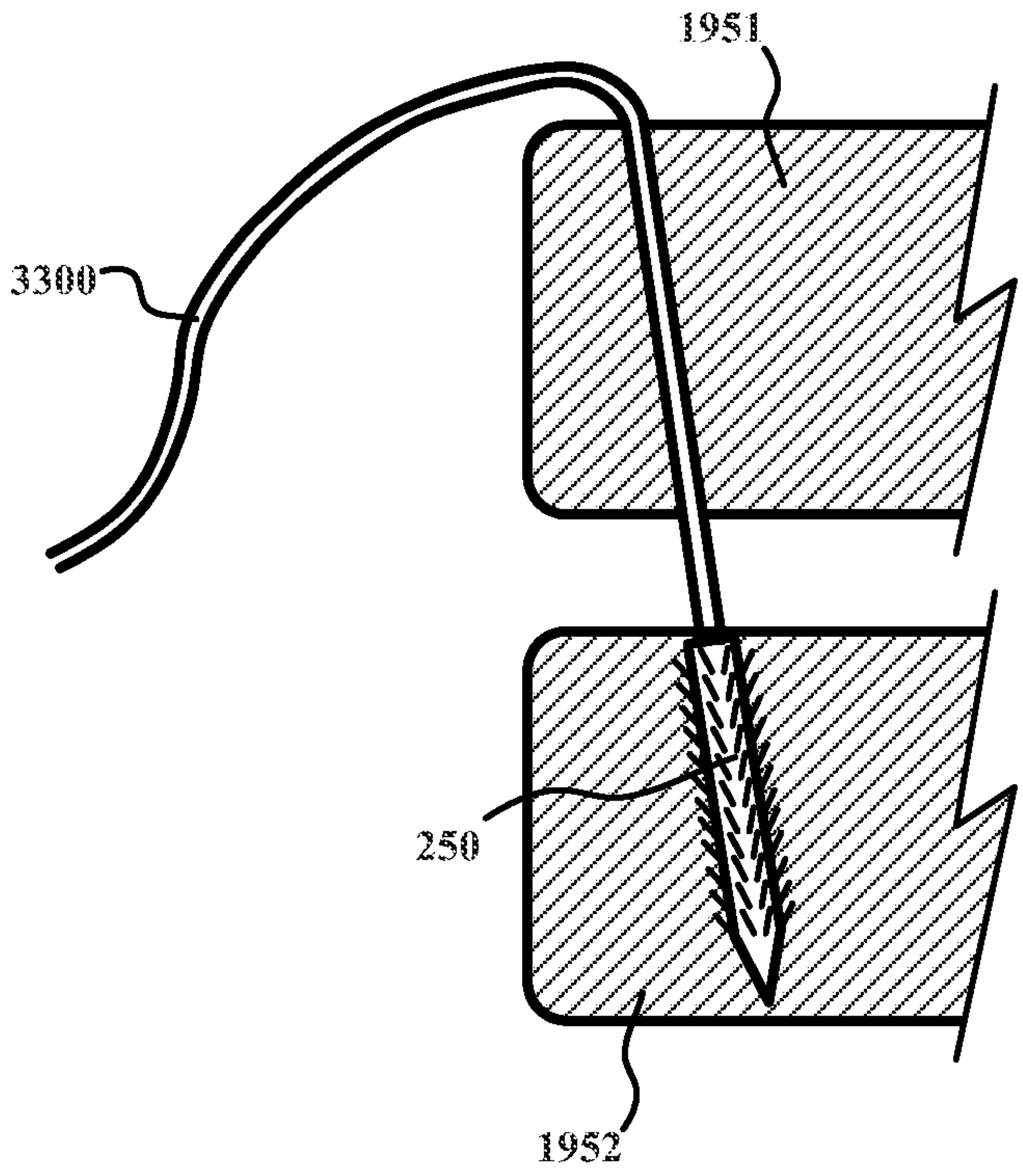

FIG. 15B

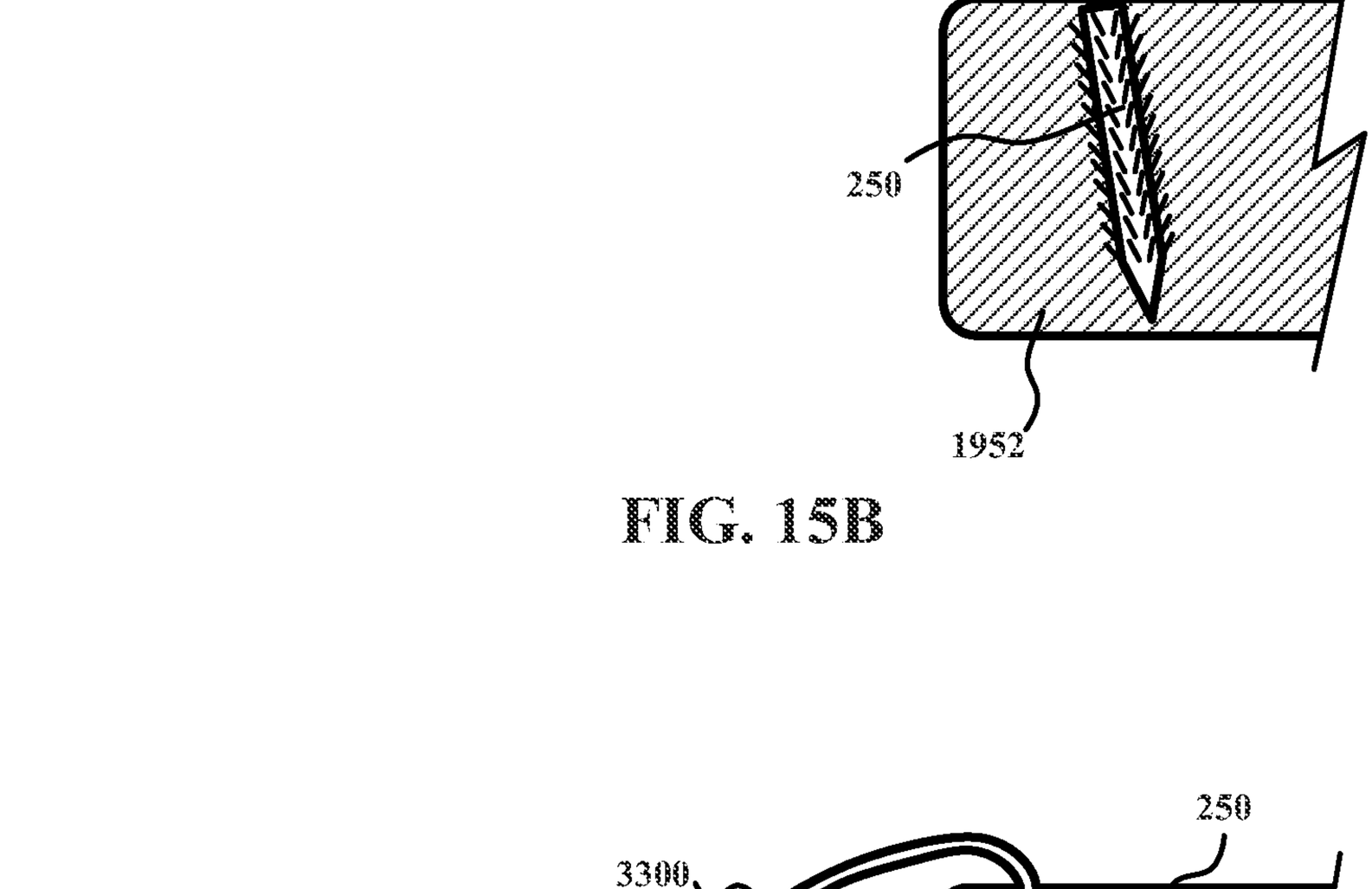

FIG. 15C

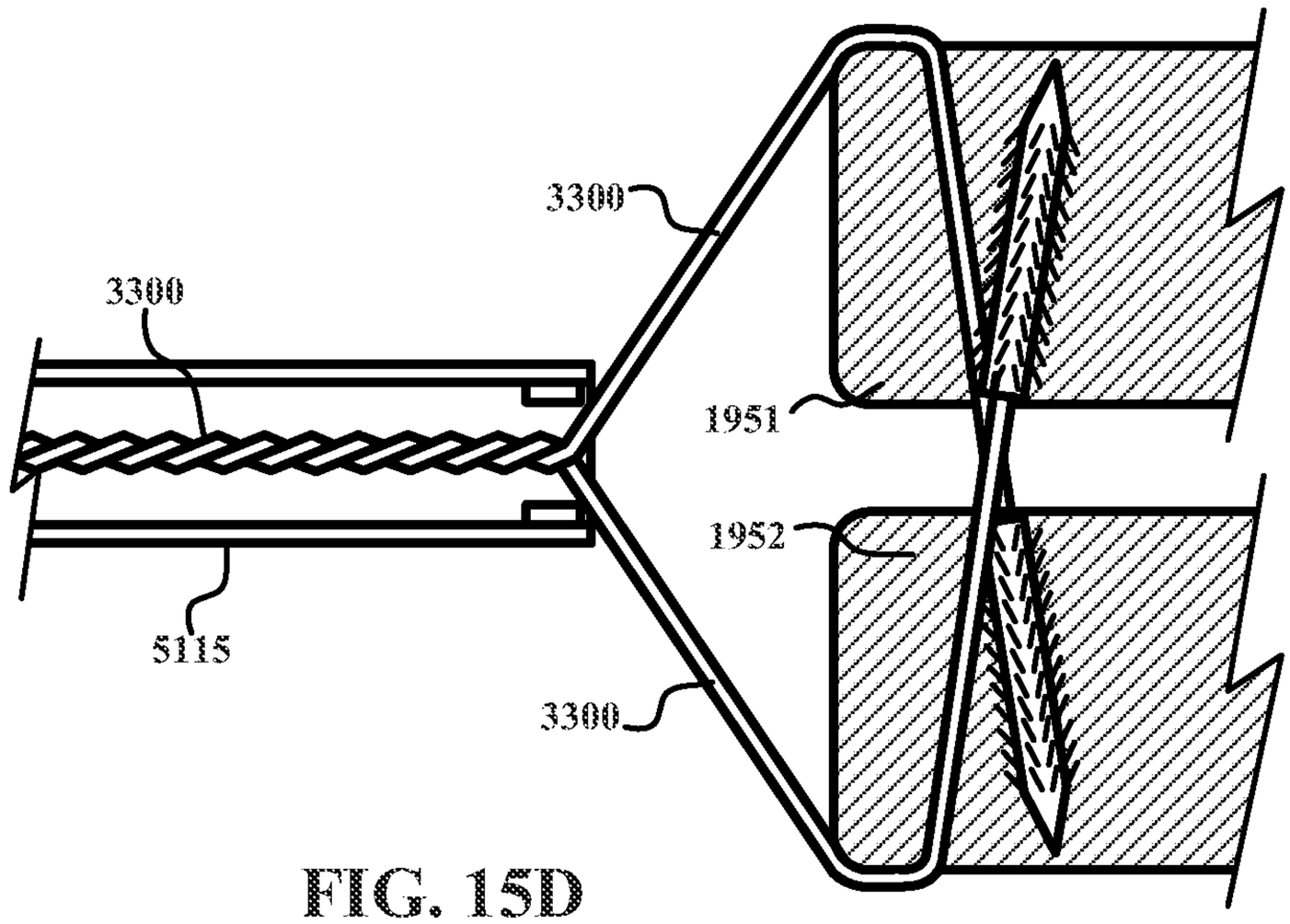

FIG. 15D

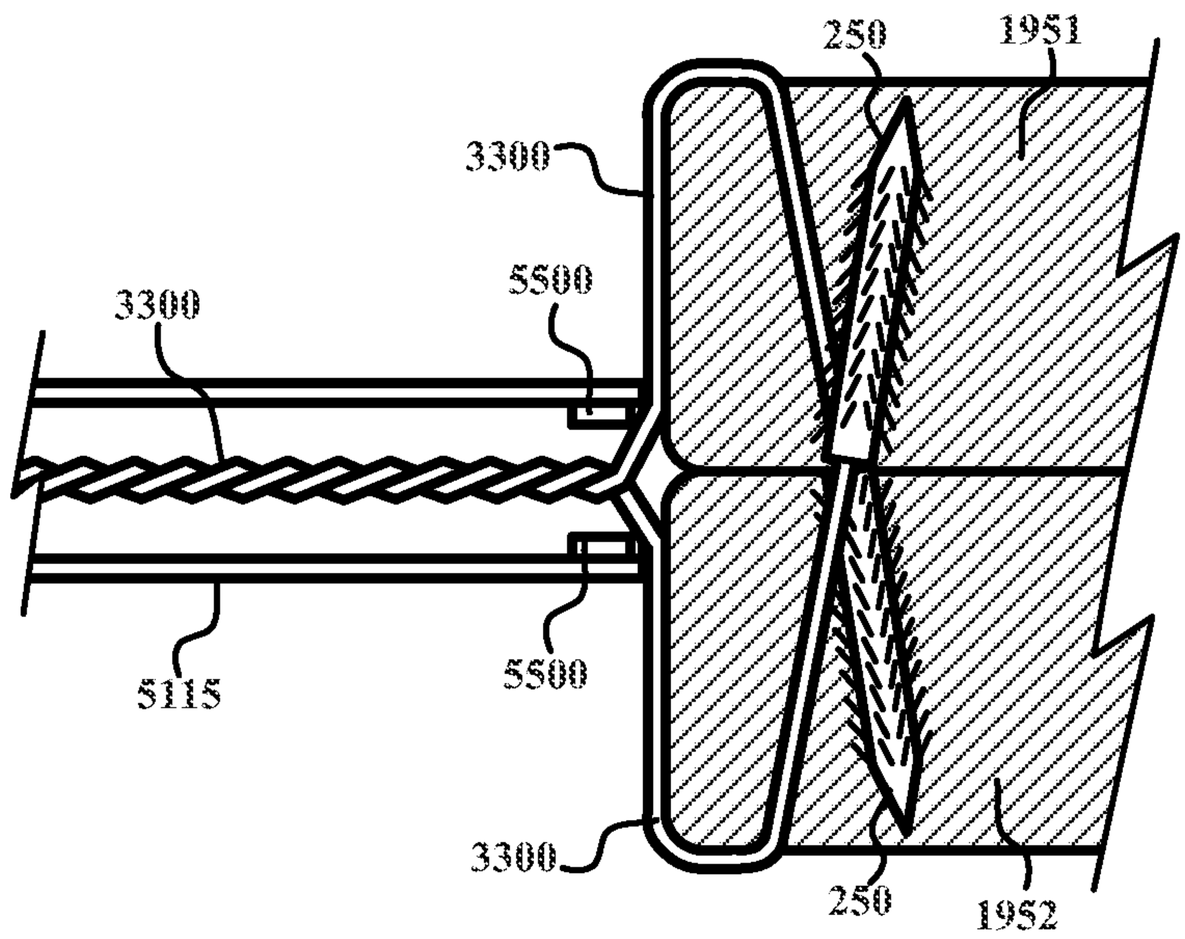

FIG. 15E

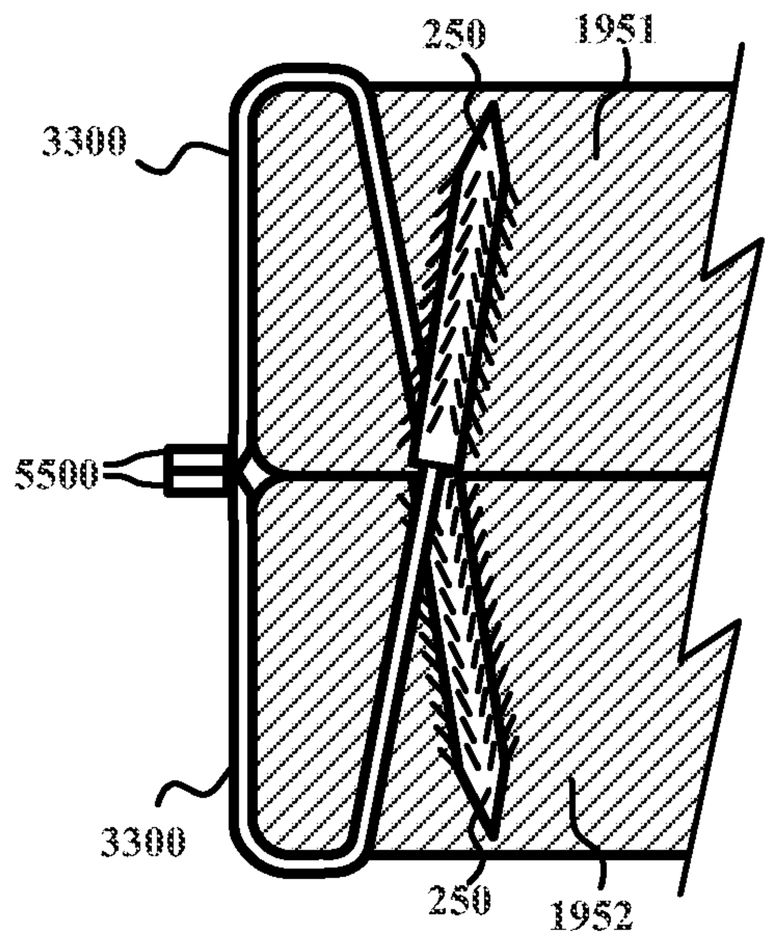

FIG. 15F

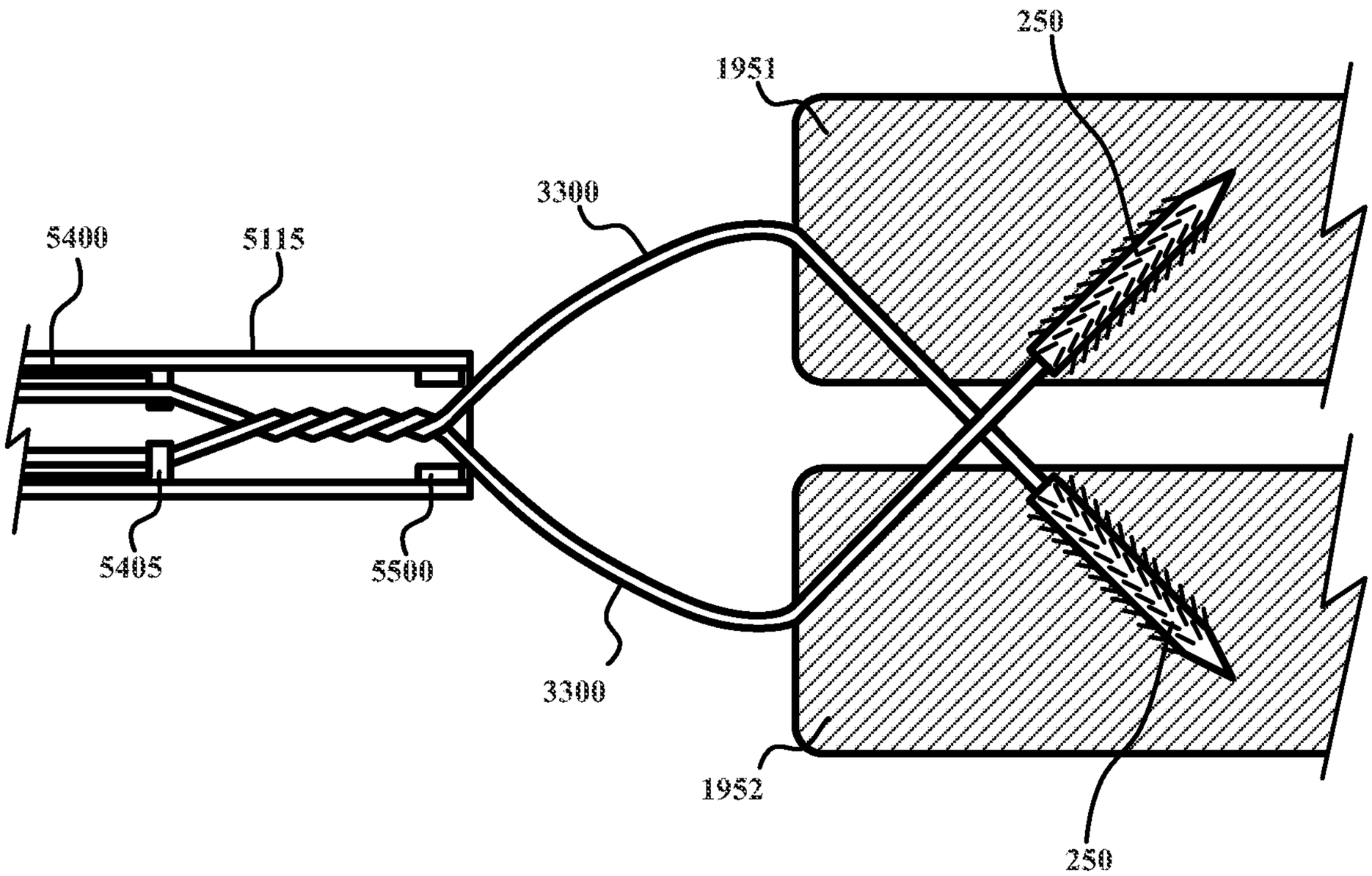

FIG. 15G

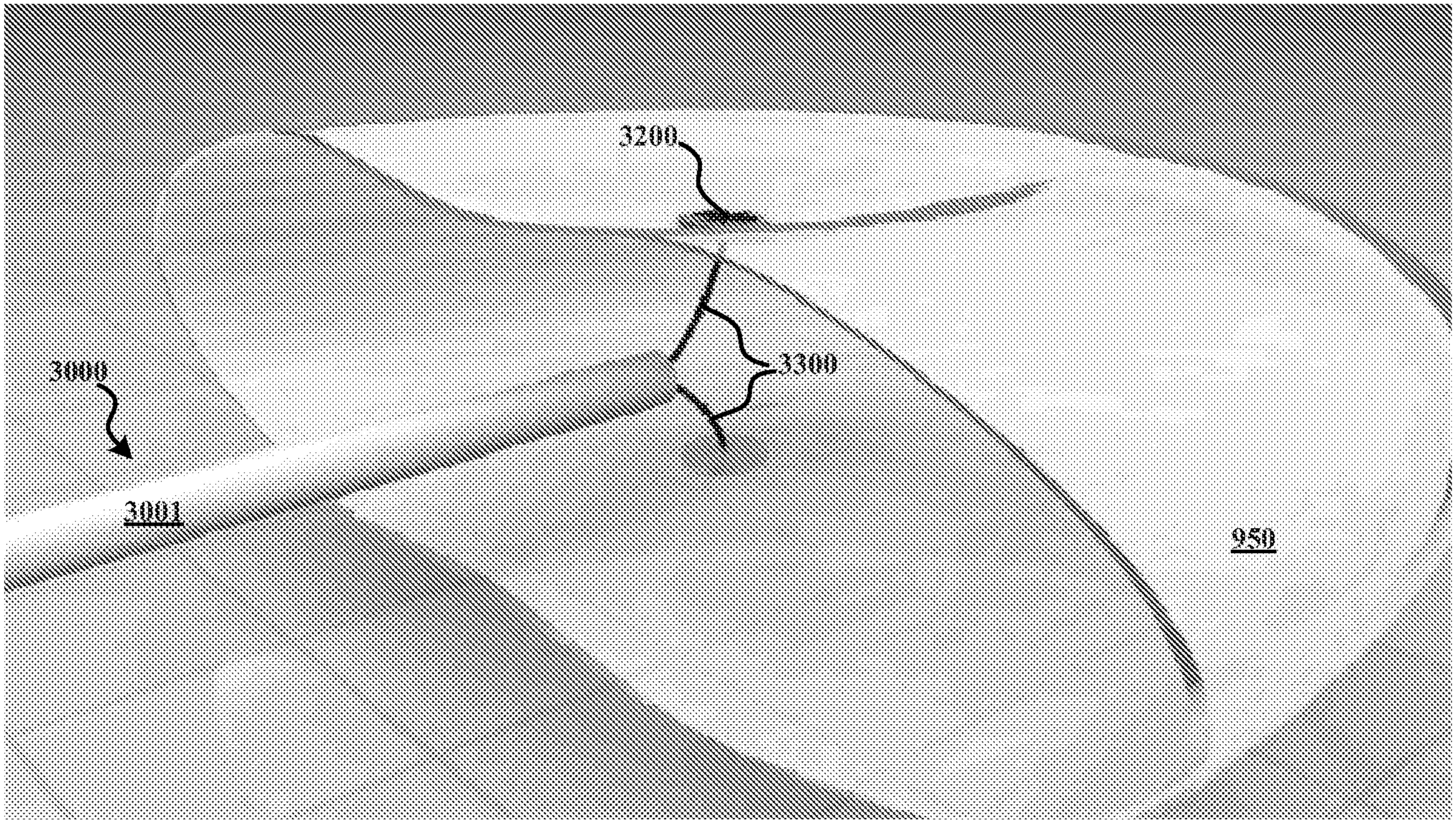

FIG. 7B