US011863546B2

(12) **United States Patent**
McCall

(10) **Patent No.: US 11,863,546 B2**
(45) **Date of Patent: Jan. 2, 2024**

(54) **METHOD FOR SECURE COMMUNICATIONS AND STRUCTURE THEREFOR**

(71) Applicant: **Eberle Design, Inc.**, Phoenix, AZ (US)

(72) Inventor: **Timothy McCall**, Phoenix, AZ (US)

(73) Assignee: **Eberle Design, Inc.**, Phoenix, AZ (US)

(*) Notice: Subject to any disclaimer, the term of this patent is extended or adjusted under 35 U.S.C. 154(b) by 526 days.

(21) Appl. No.: **16/865,308**

(22) Filed: **May 2, 2020**

(65) **Prior Publication Data**

US 2020/0259820 A1 Aug. 13, 2020

Related U.S. Application Data

(63) Continuation-in-part of application No. 16/670,018, filed on Oct. 31, 2019, now Pat. No. 11,521,486.

(60) Provisional application No. 62/977,121, filed on Feb. 14, 2020, provisional application No. 62/758,485, filed on Nov. 9, 2018.

(51) **Int. Cl.**

G01C 21/00	(2006.01)
G01C 21/20	(2006.01)
H04L 9/40	(2022.01)
H04W 4/40	(2018.01)
H04W 4/021	(2018.01)
G08B 13/22	(2006.01)

(52) **U.S. Cl.**

CPC ***H04L 63/0823*** (2013.01); ***G08B 13/22*** (2013.01); ***H04W 4/021*** (2013.01); ***H04W 4/40*** (2018.02)

(58) **Field of Classification Search**

CPC H04L 63/0823; H04L 2209/84; H04L 9/0852; H04L 9/3239; H04L 9/3263; H04L 9/50; H04L 2463/082; G08B 13/22; H04W 4/021; H04W 4/40; H04W 12/069

USPC 340/146.2

See application file for complete search history.

(56) **References Cited**

U.S. PATENT DOCUMENTS

2007/0223702	A1	9/2007	Tengler et al.	
2015/0256534	A1*	9/2015	Goudy	H04W 12/033 713/156
2016/0323715	A1*	11/2016	Leroux	H04W 4/029
2017/0186257	A1	6/2017	Gerlach	
2018/0146471	A1*	5/2018	Xu	H04W 4/08
2019/0057557	A1	2/2019	Wang et al.	
2019/0238343	A1	8/2019	Racklyeft et al.	
2019/0381189	A1*	12/2019	Xu	A61K 47/6939

* cited by examiner

Primary Examiner — Tanmay K Shah

(74) *Attorney, Agent, or Firm* — Weiss & Moy, PC; Jeffrey D. Moy

(57) **ABSTRACT**

In accordance with an embodiment, a method for delivering a certificate to a vehicle comprising transmitting the certificate to the vehicle via near field coupling is provided. The near field coupling can be accomplished by transmitting data using a near field coupled antenna to a receiver. The near field coupled antenna can also be used for content delivery such as for example, a streaming video signal, a streaming webcast signal, non-streaming transfer of information, etc. The method can be used for location validation of land vehicles, marine vehicles, and pedestrians as well as content delivery, and payment mechanisms. In accordance with another embodiment a traffic control system is configured to control vehicles and pedestrians in an intelligent transportation system.

7 Claims, 33 Drawing Sheets

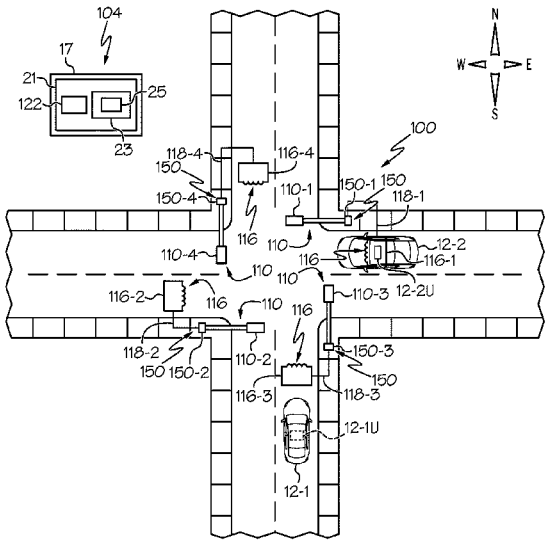

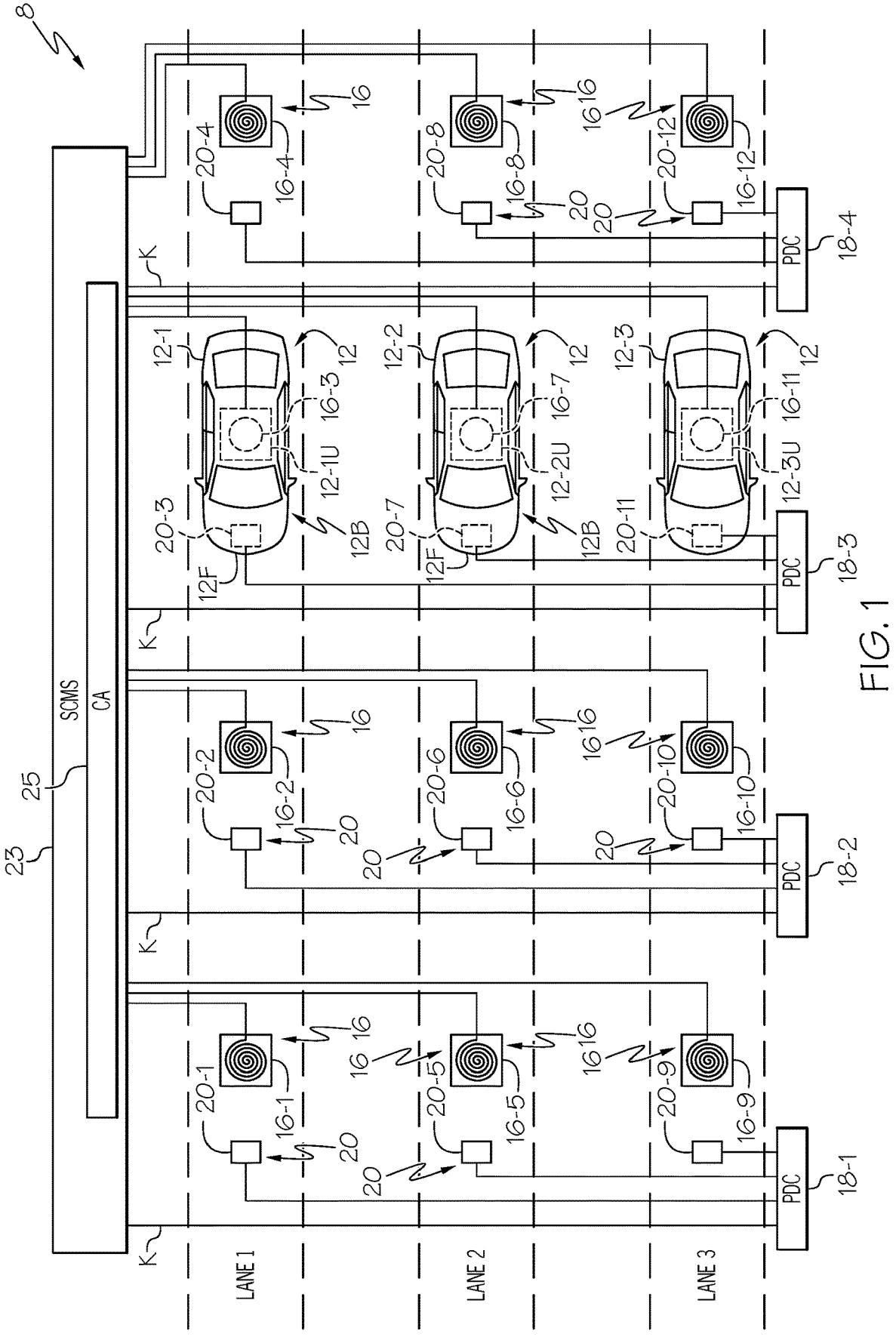
8
SCMS
CA
25
23
K
LANE 1
LANE 2
LANE 3
PDC
18-1
18-2
18-3
18-4
12-1
12-2
12-3
12
12-1U
12-2U
12-3U
12B
12F
16
16-1
16-2
16-3
16-4
16-5
16-6
16-7
16-8
16-9
16-10
16-11
16-12
20
20-1
20-2
20-3
20-4
20-5
20-6
20-7
20-8
20-9
20-10
20-11
20-12

FIG. 1

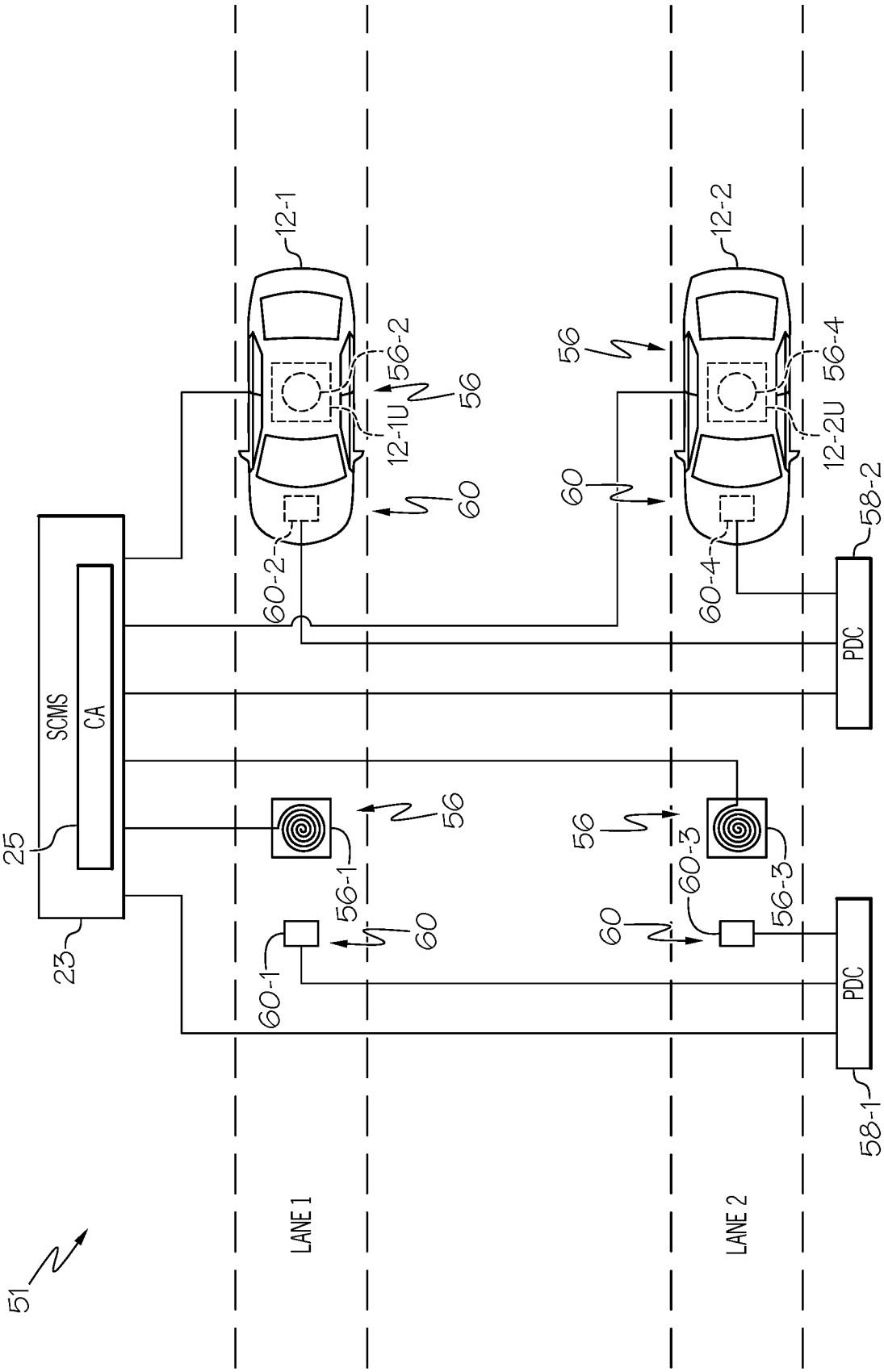
51
LANE 1
LANE 2
SCMS
CA
25
23
12-1
12-2
12-1U
12-2U
56-1
56-2
56-3
56-4
56
60
60-1
60-2
60-3
60-4
58-1
58-2
PDC
PDC

FIG. 2

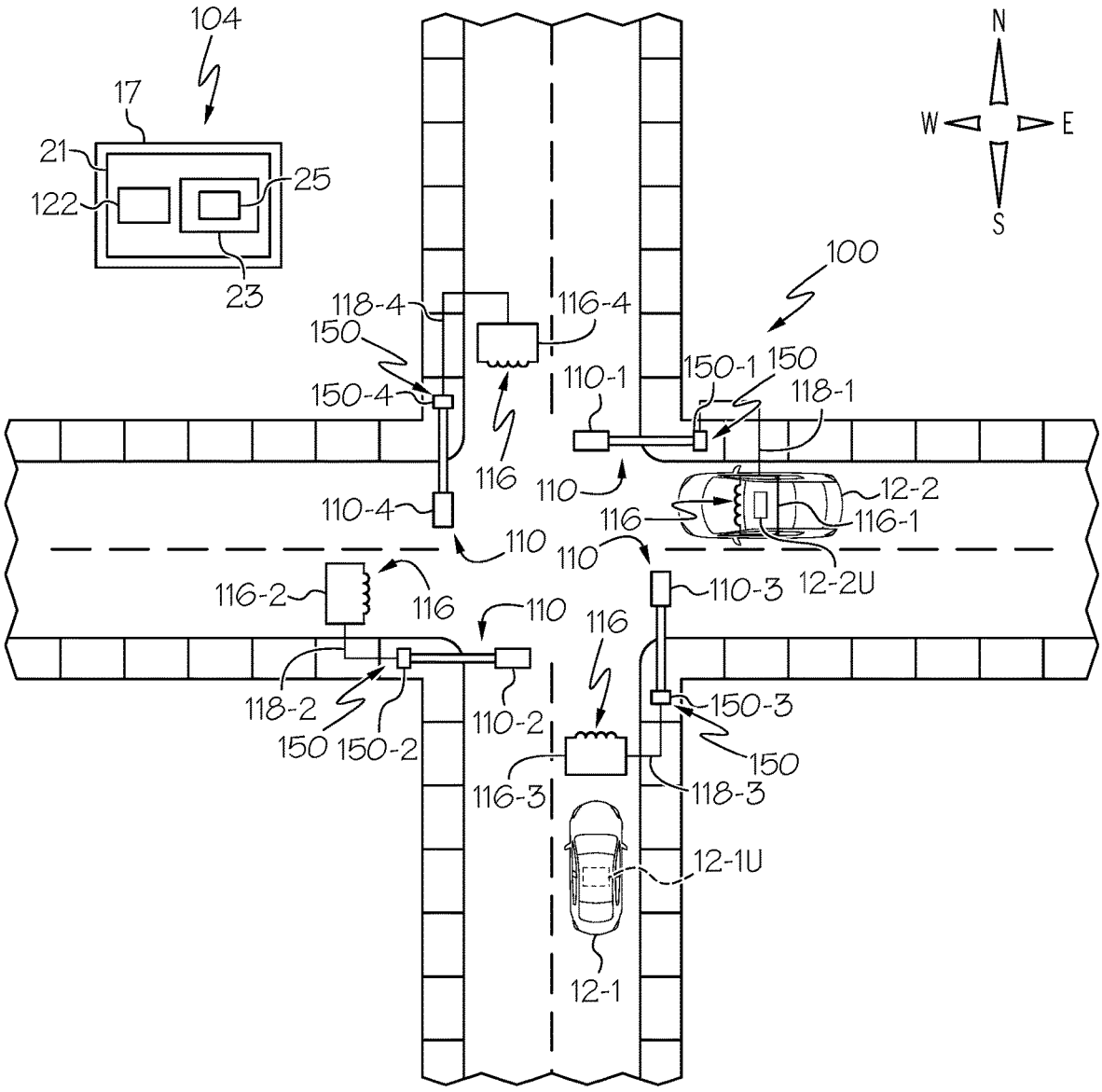
104
17
21
122
25
23
N
W
E
S
100
118-4
150
116-4
150-4
110-1
150-1
150
118-1
116
110
110-4
12-2
116
116-1
110
110
12-2U
116-2
116
110
110-3
116
118-2
150
150-2
110-2
150-3
150
116-3
118-3
12-1U
12-1

FIG. 3

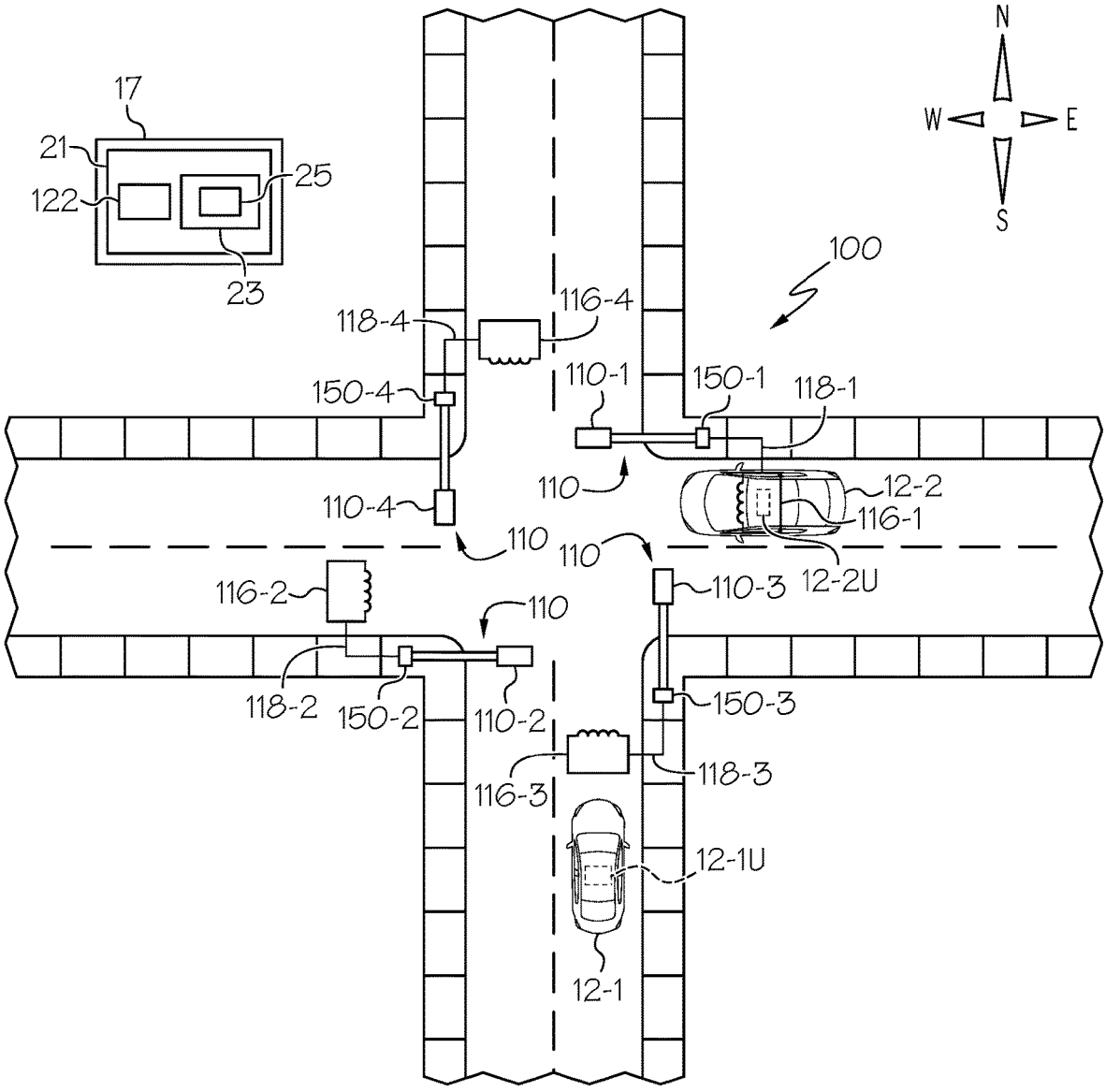
17
21
122
25
23
N
W
E
S
100
118-4
116-4
150-4
110-1
150-1
118-1
110
12-2
116-1
110-4
110
110
110-3
12-2U
116-2
110
118-2
150-2
110-2
150-3
116-3
118-3
12-1U
12-1

FIG. 4

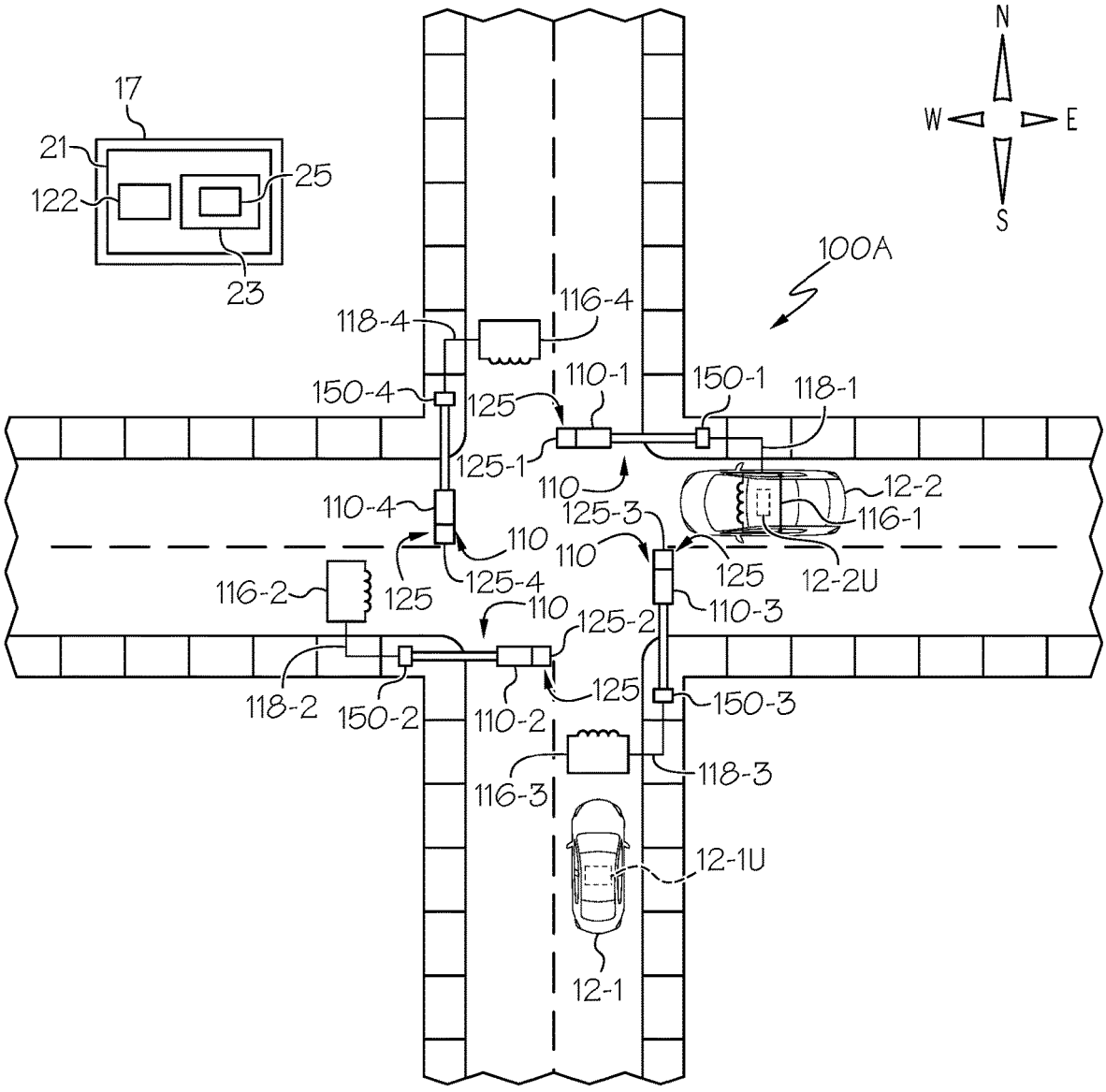
17
21
122
25
23
N
W
E
S
100A
118-4
116-4
150-4
125
110-1
150-1
118-1
125-1
110
12-2
110-4
125-3
116-1
110
110
125
12-2U
116-2
125
125-4
110
110-3
125-2
118-2
150-2
110-2
125
150-3
116-3
118-3
12-1U
12-1

FIG. 5

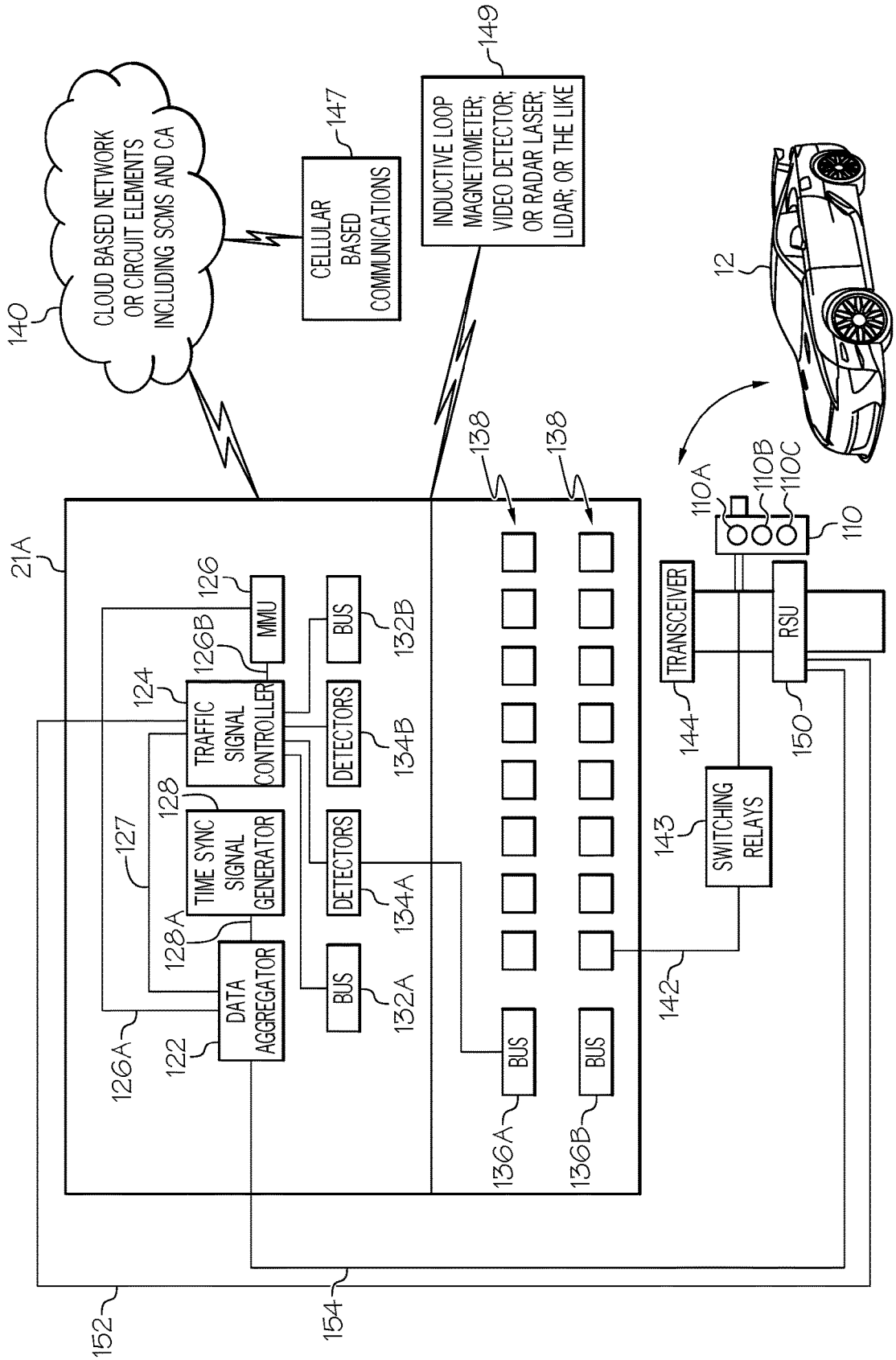
CLOUD BASED NETWORK OR CIRCUIT ELEMENTS INCLUDING SCMS AND CA
140
CELLULAR BASED COMMUNICATIONS
147
INDUCTIVE LOOP MAGNETOMETER; VIDEO DETECTOR; OR RADAR LASER; LIDAR; OR THE LIKE
149
12
21A
138
138
110A
110B
110C
110
TRANSCEIVER
RSU
144
150
143
SWITCHING RELAYS
142
126
MMU
126B
124
TRAFFIC SIGNAL CONTROLLER
128
127
TIME SYNC SIGNAL GENERATOR
128A
126A
122
DATA AGGREGATOR
BUS
132B
DETECTORS
134B
DETECTORS
134A
BUS
132A
BUS
136A
BUS
136B
152
154

FIG. 6

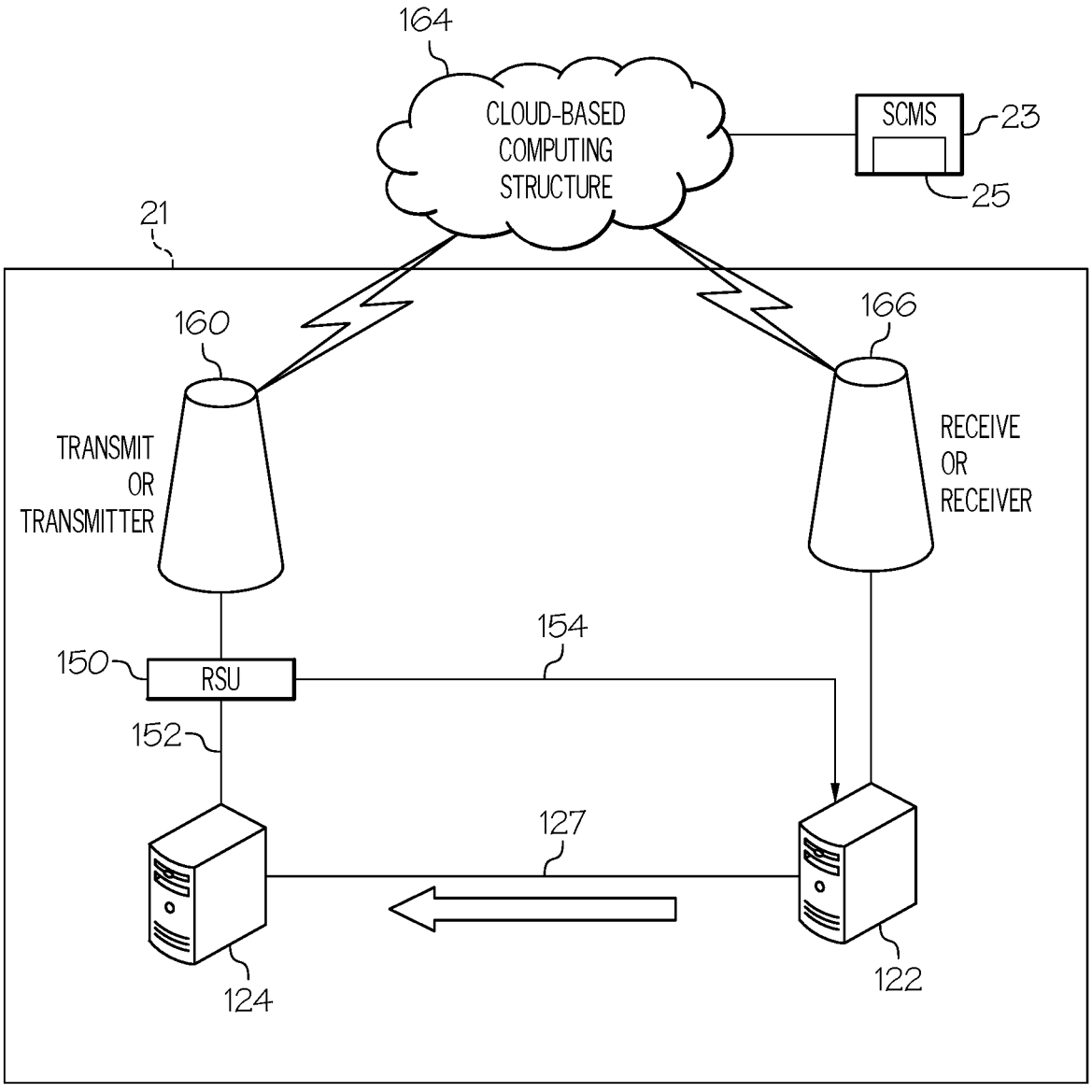
164
CLOUD-BASED COMPUTING STRUCTURE
SCMS
23
25
21
160
166
TRANSMIT OR TRANSMITTER
RECEIVE OR RECEIVER
154
150
RSU
152
127
124
122

FIG. 7

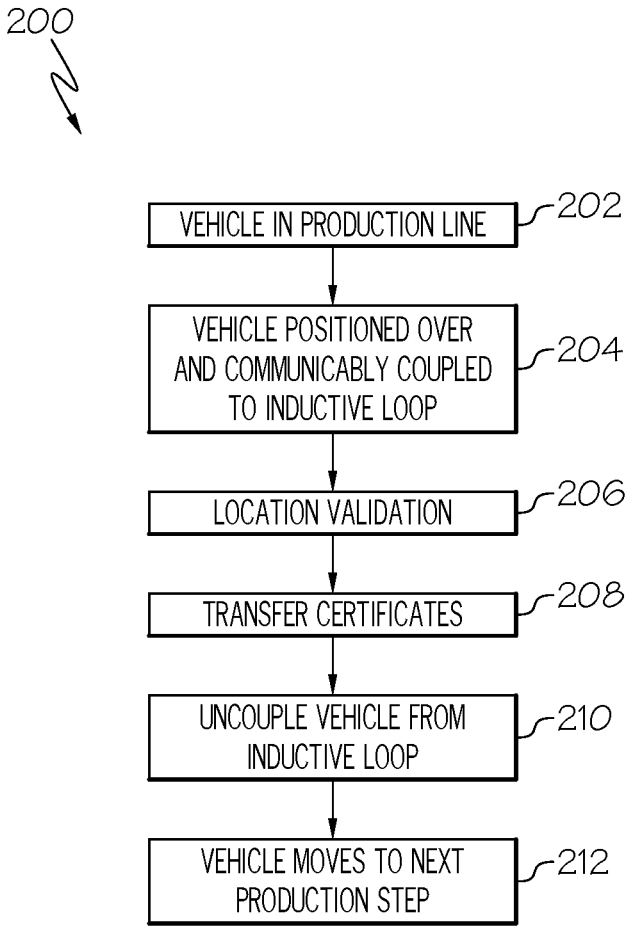
200
VEHICLE IN PRODUCTION LINE
202
VEHICLE POSITIONED OVER AND COMMUNICABLY COUPLED TO INDUCTIVE LOOP
204
LOCATION VALIDATION
206
TRANSFER CERTIFICATES
208
UNCOUPLE VEHICLE FROM INDUCTIVE LOOP
210
VEHICLE MOVES TO NEXT PRODUCTION STEP
212

FIG. 8

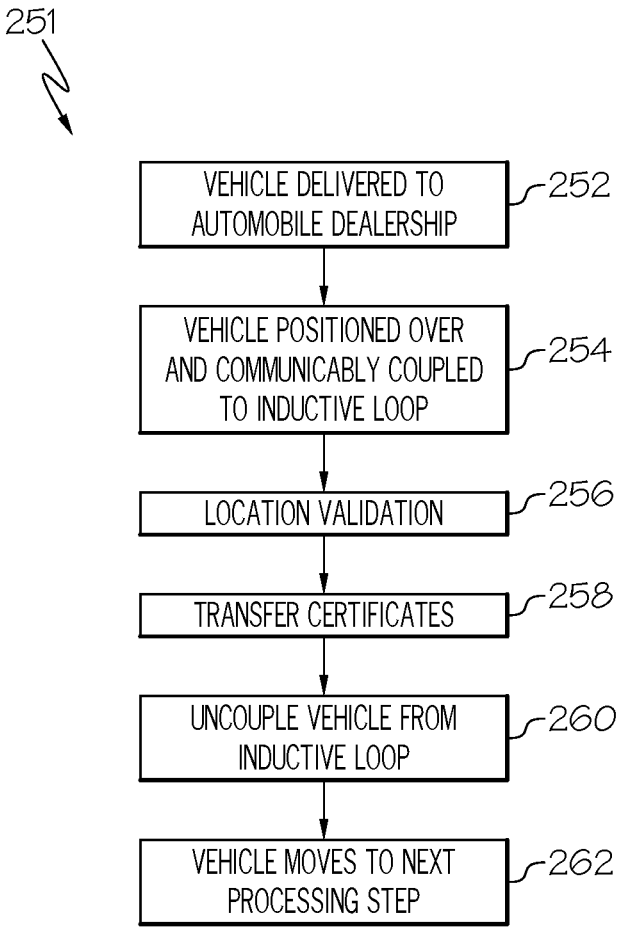
251
VEHICLE DELIVERED TO AUTOMOBILE DEALERSHIP
252
VEHICLE POSITIONED OVER AND COMMUNICABLY COUPLED TO INDUCTIVE LOOP
254
LOCATION VALIDATION
256
TRANSFER CERTIFICATES
258
UNCOUPLE VEHICLE FROM INDUCTIVE LOOP
260
VEHICLE MOVES TO NEXT PROCESSING STEP
262

FIG. 9

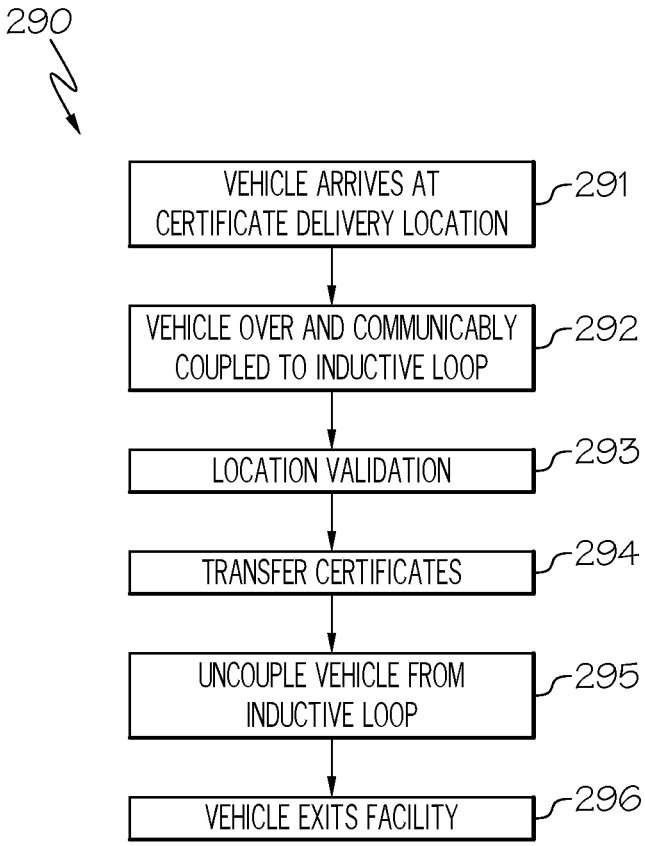
290
VEHICLE ARRIVES AT CERTIFICATE DELIVERY LOCATION
291
VEHICLE OVER AND COMMUNICABLY COUPLED TO INDUCTIVE LOOP
292
LOCATION VALIDATION
293
TRANSFER CERTIFICATES
294
UNCOUPLE VEHICLE FROM INDUCTIVE LOOP
295
VEHICLE EXITS FACILITY
296

FIG. 10

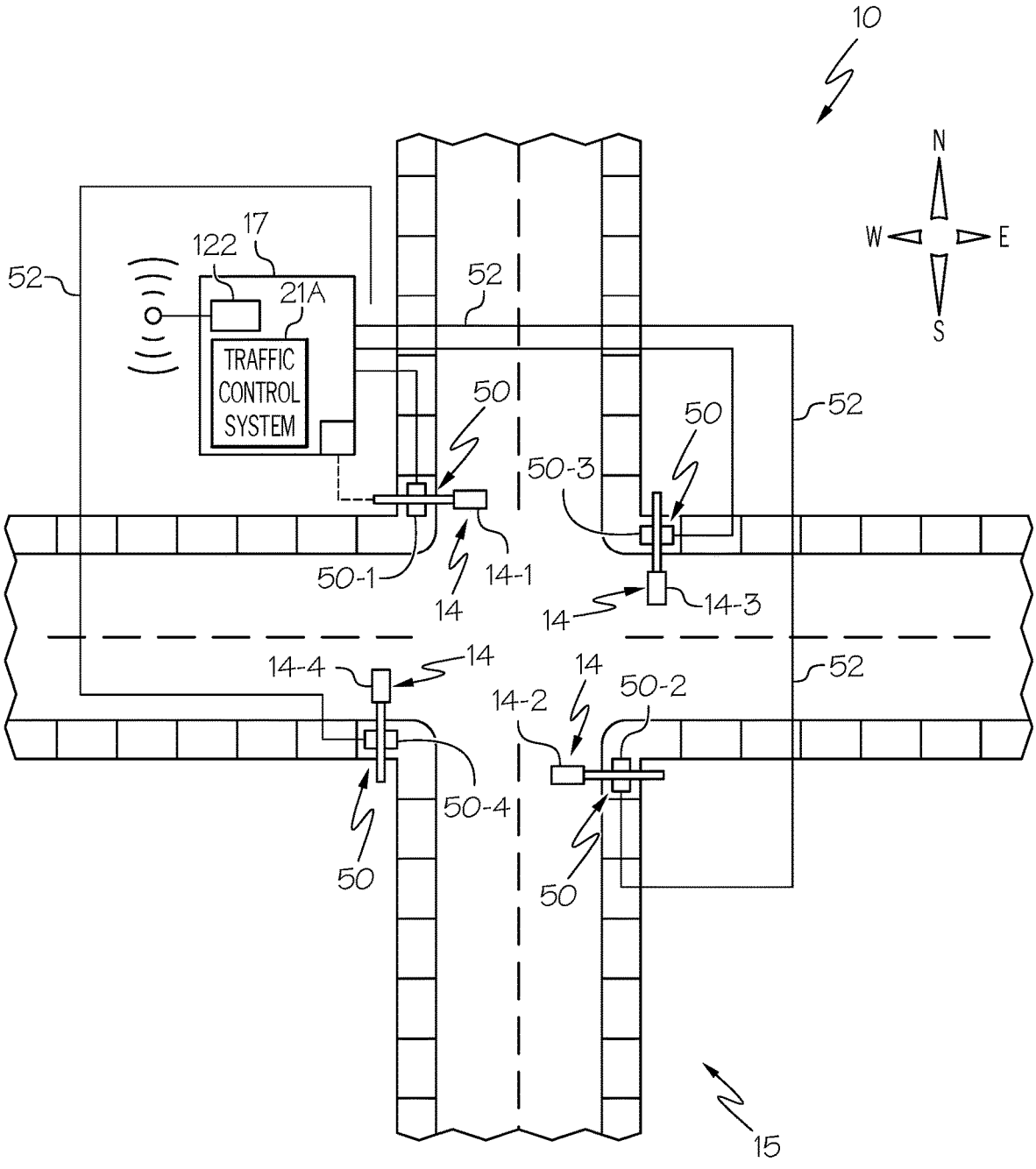
10
N
W
E
S
52
17
122
21A
TRAFFIC CONTROL SYSTEM
50
50-3
50-1
14
14-1
14-3
14-4
14-2
50-2
50-4
15

FIG. 11

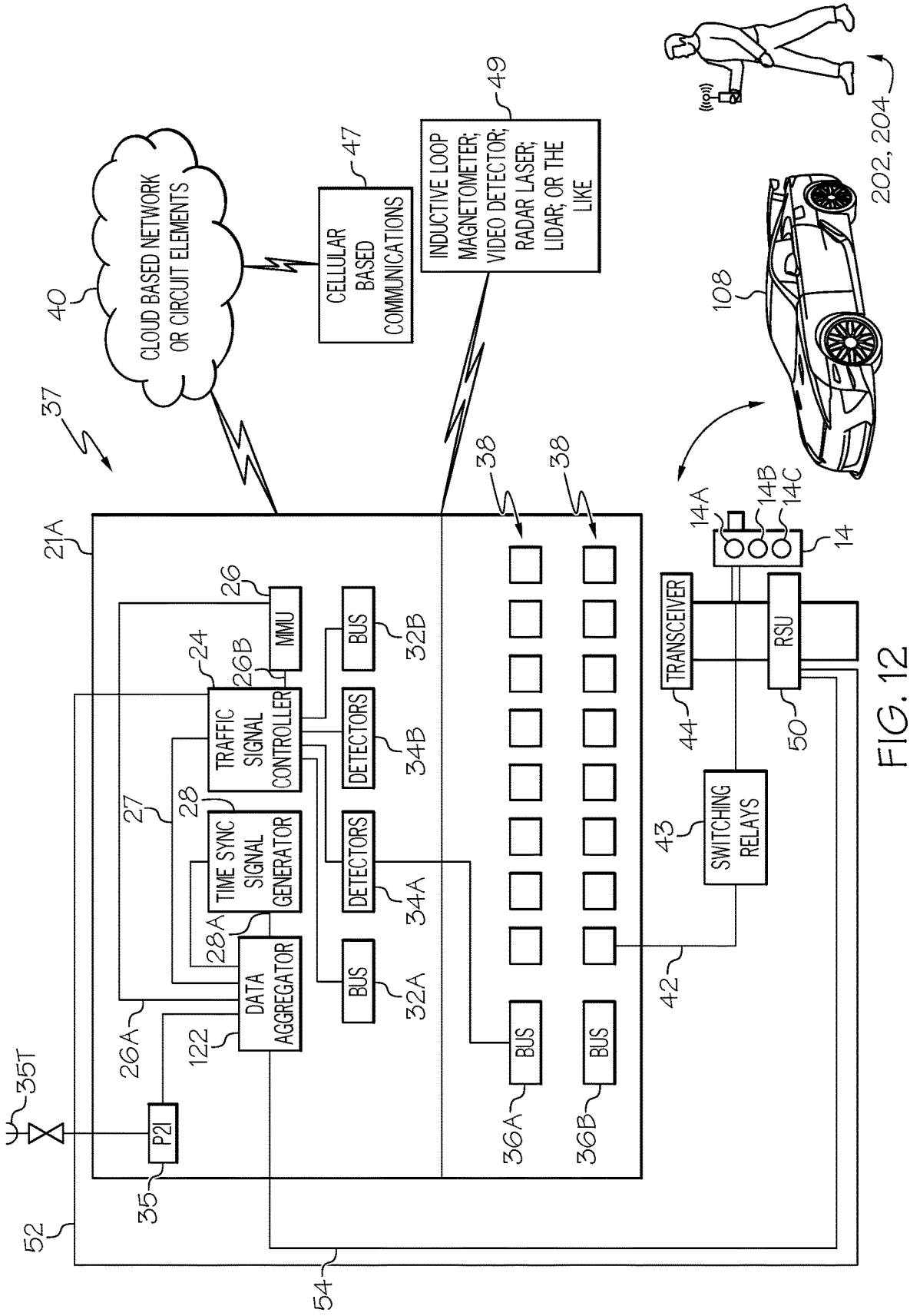
CLOUD BASED NETWORK OR CIRCUIT ELEMENTS
40
CELLULAR BASED COMMUNICATIONS
47
INDUCTIVE LOOP MAGNETOMETER; VIDEO DETECTOR; RADAR LASER; LIDAR; OR THE LIKE
49
202, 204
108
37
38
38
21A
14A
14B
14C
14
TRANSCEIVER
RSU
44
50
43
SWITCHING RELAYS
42
26
MMU
BUS
32B
24
26B
TRAFFIC SIGNAL CONTROLLER
DETECTORS
34B
27
28
TIME SYNC SIGNAL GENERATOR
28A
DETECTORS
34A
DATA AGGREGATOR
BUS
32A
122
26A
35T
P2I
35
52
54
BUS
36A
BUS
36B

FIG. 12

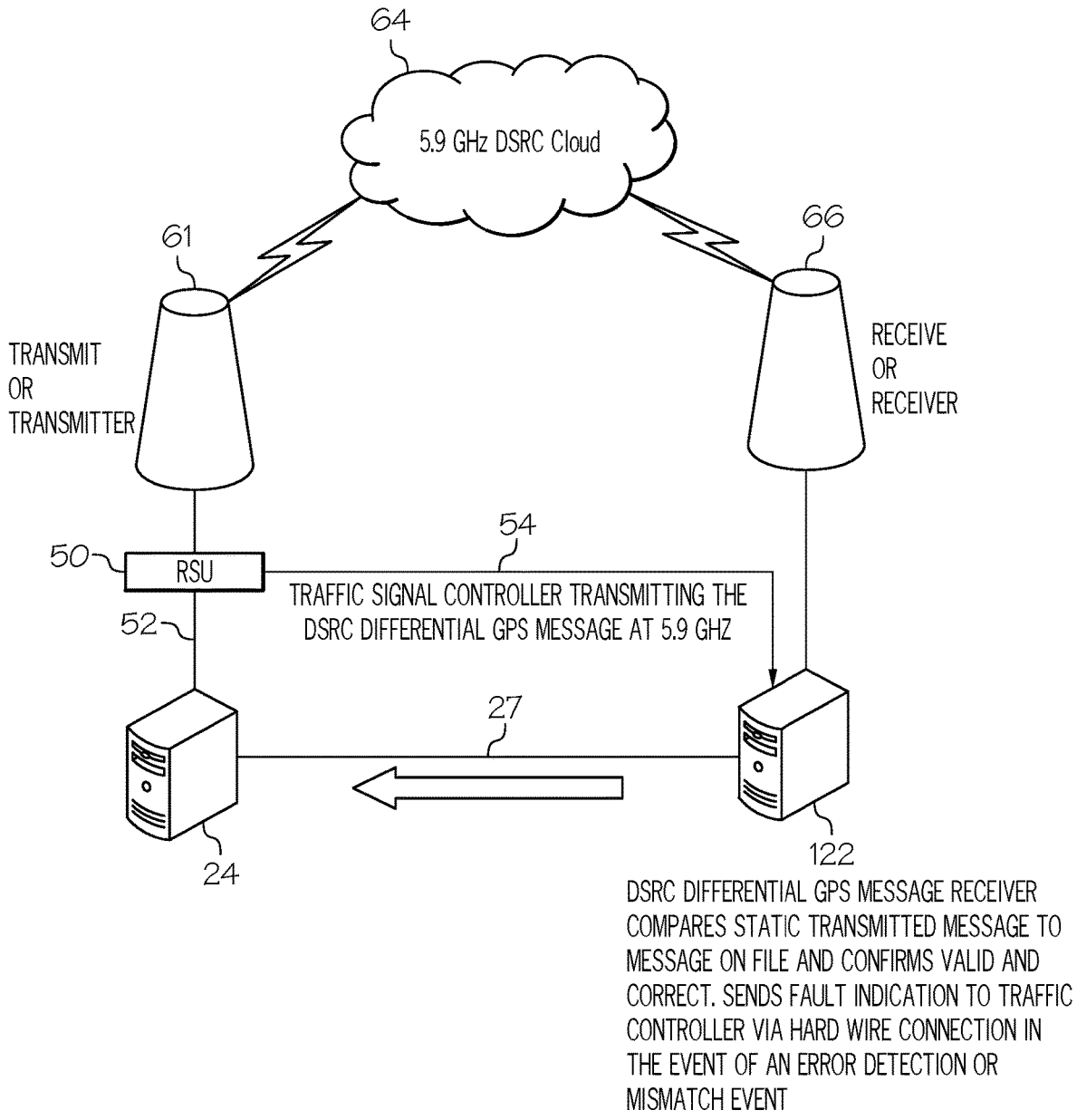
64
5.9 GHz DSRC Cloud
61
66
TRANSMIT
OR
TRANSMITTER
RECEIVE
OR
RECEIVER
54
50
RSU
TRAFFIC SIGNAL CONTROLLER TRANSMITTING THE
DSRC DIFFERENTIAL GPS MESSAGE AT 5.9 GHZ
52
27
24
122
DSRC DIFFERENTIAL GPS MESSAGE RECEIVER
COMPARES STATIC TRANSMITTED MESSAGE TO
MESSAGE ON FILE AND CONFIRMS VALID AND
CORRECT. SENDS FAULT INDICATION TO TRAFFIC
CONTROLLER VIA HARD WIRE CONNECTION IN
THE EVENT OF AN ERROR DETECTION OR
MISMATCH EVENT

FIG. 13

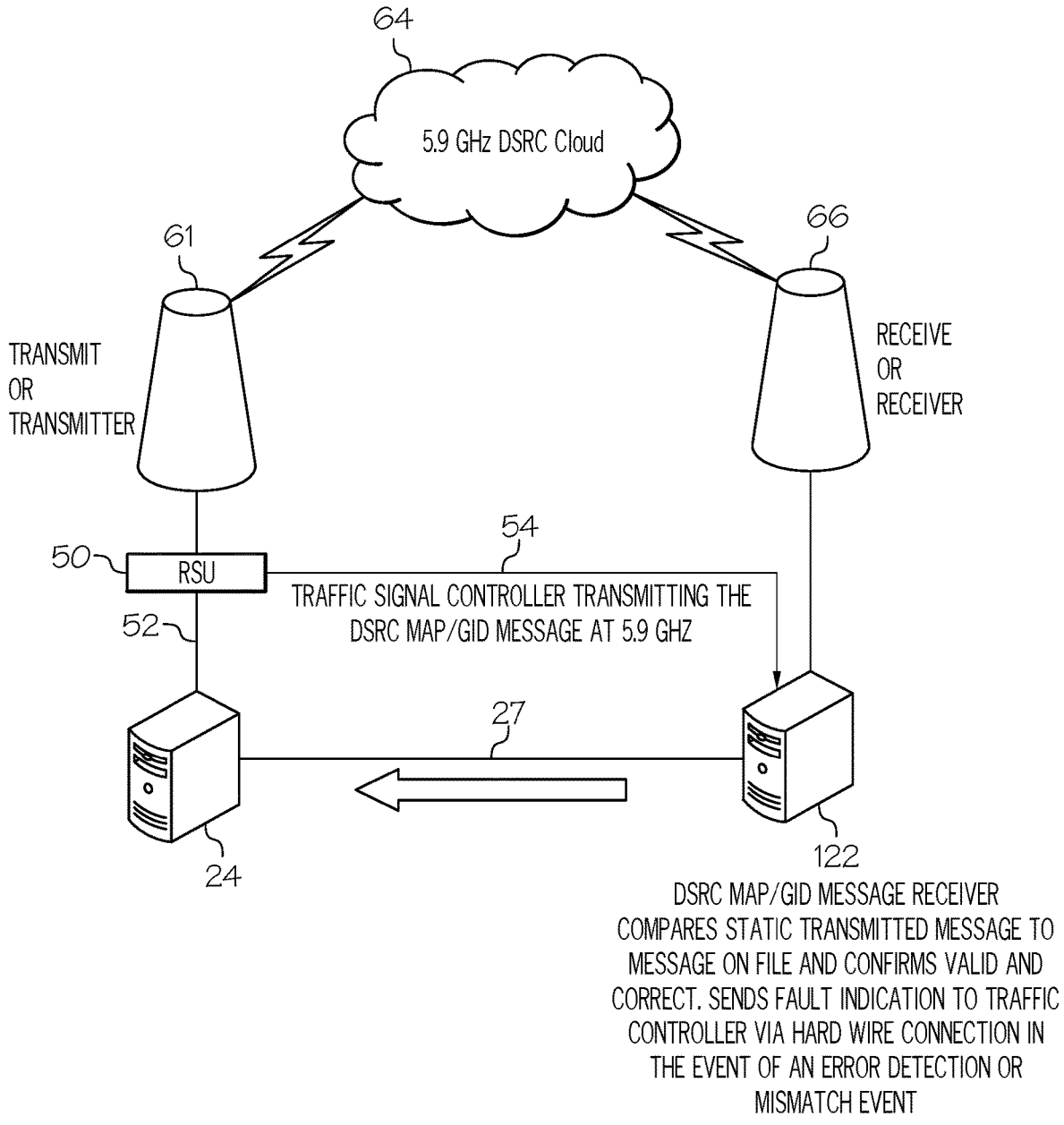
64
5.9 GHz DSRC Cloud
61
66
TRANSMIT
OR
TRANSMITTER
RECEIVE
OR
RECEIVER
50
RSU
54
TRAFFIC SIGNAL CONTROLLER TRANSMITTING THE DSRC MAP/GID MESSAGE AT 5.9 GHZ
52
27
24
122
DSRC MAP/GID MESSAGE RECEIVER COMPARES STATIC TRANSMITTED MESSAGE TO MESSAGE ON FILE AND CONFIRMS VALID AND CORRECT. SENDS FAULT INDICATION TO TRAFFIC CONTROLLER VIA HARD WIRE CONNECTION IN THE EVENT OF AN ERROR DETECTION OR MISMATCH EVENT

FIG. 14

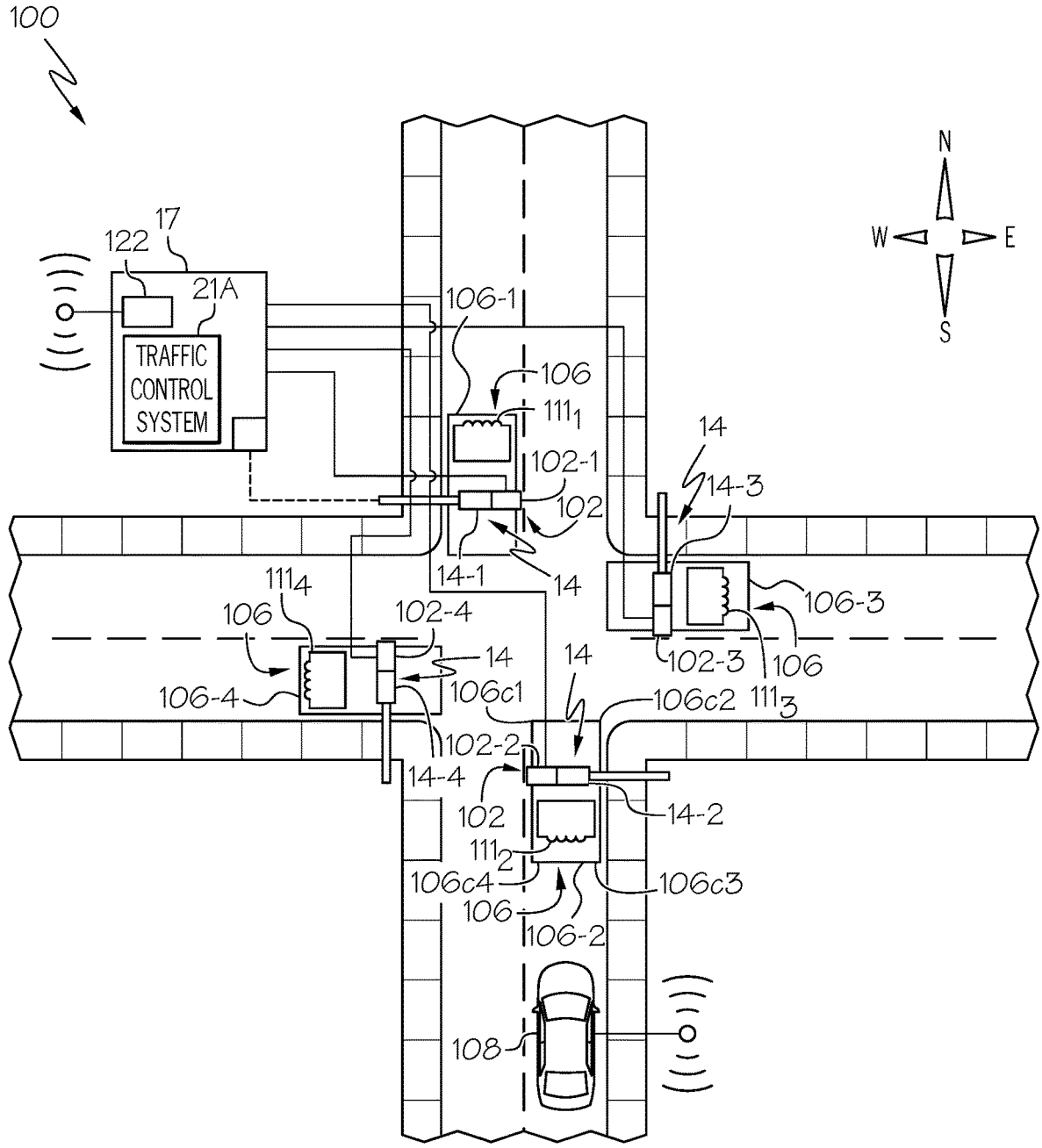
100
17
122
21A
TRAFFIC CONTROL SYSTEM
106-1
106
111_1
102-1
102
14
14-3
14-1
14
111_4
106
102-4
14
106-4
106c1
14
106c2
111_3
106-3
102-3
106
102-2
14-4
102
111_2
106c4
106
106-2
14-2
106c3
108
N
W
E
S

FIG. 15

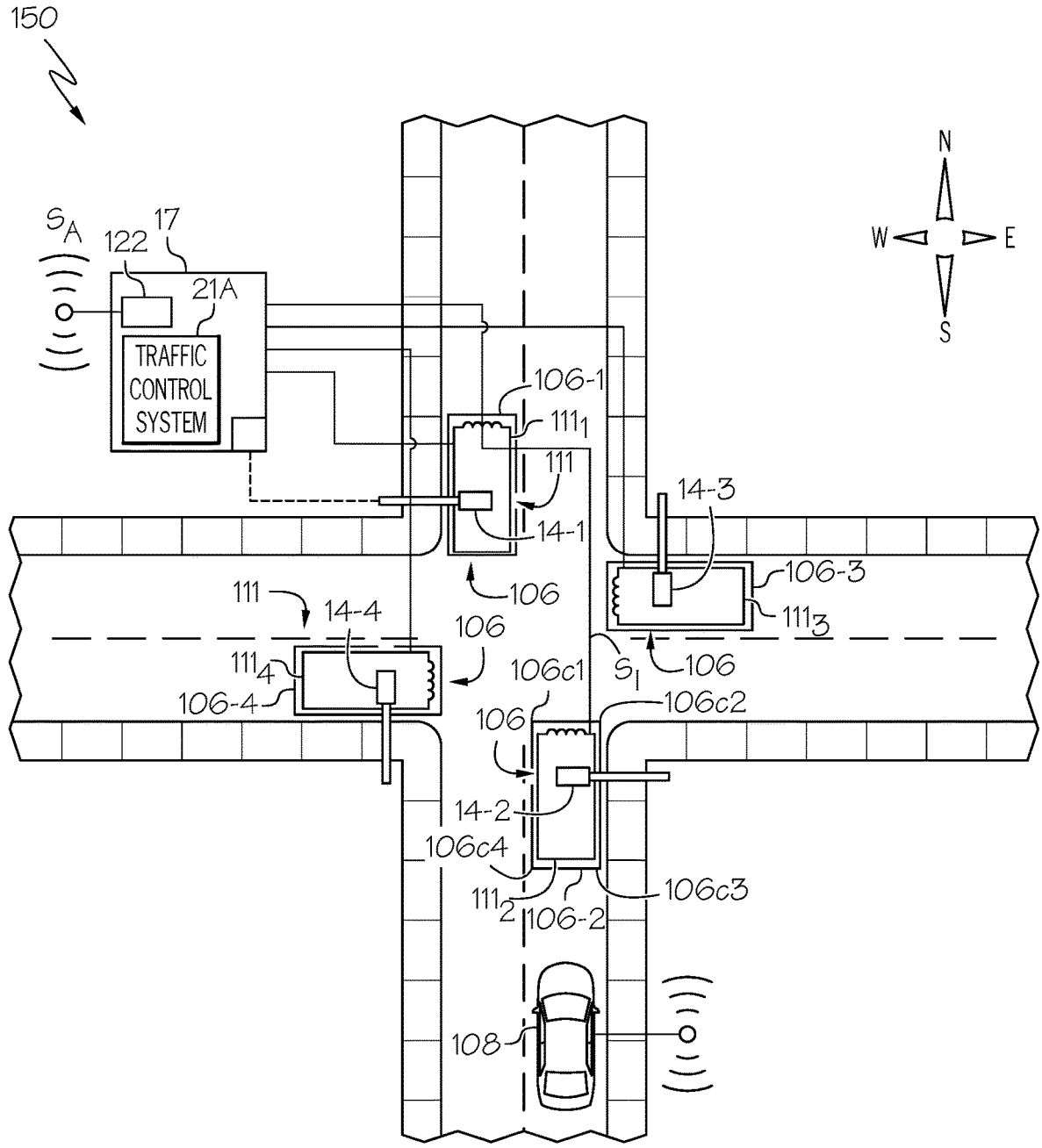
150
S_A
122
17
21A
TRAFFIC CONTROL SYSTEM
N
W
E
S
106-1
111_1
111
14-1
14-3
106
106-3
111_3
111
14-4
106
111_4
106-4
106c1
S_1
106
106c2
106
14-2
106c4
111_2
106-2
106c3
108

FIG. 16

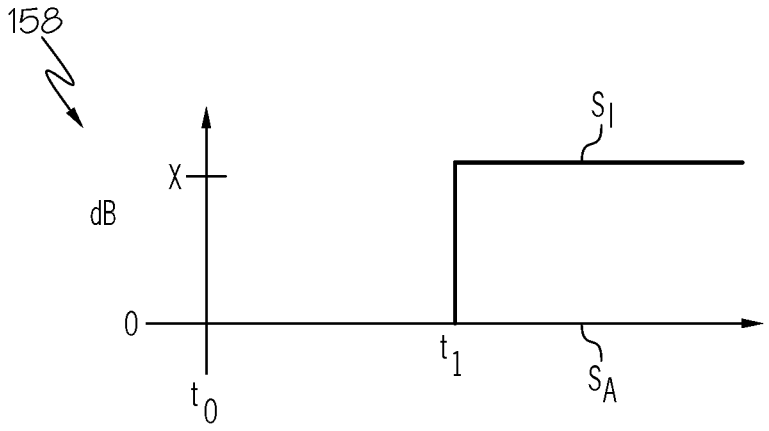

FIG. 17

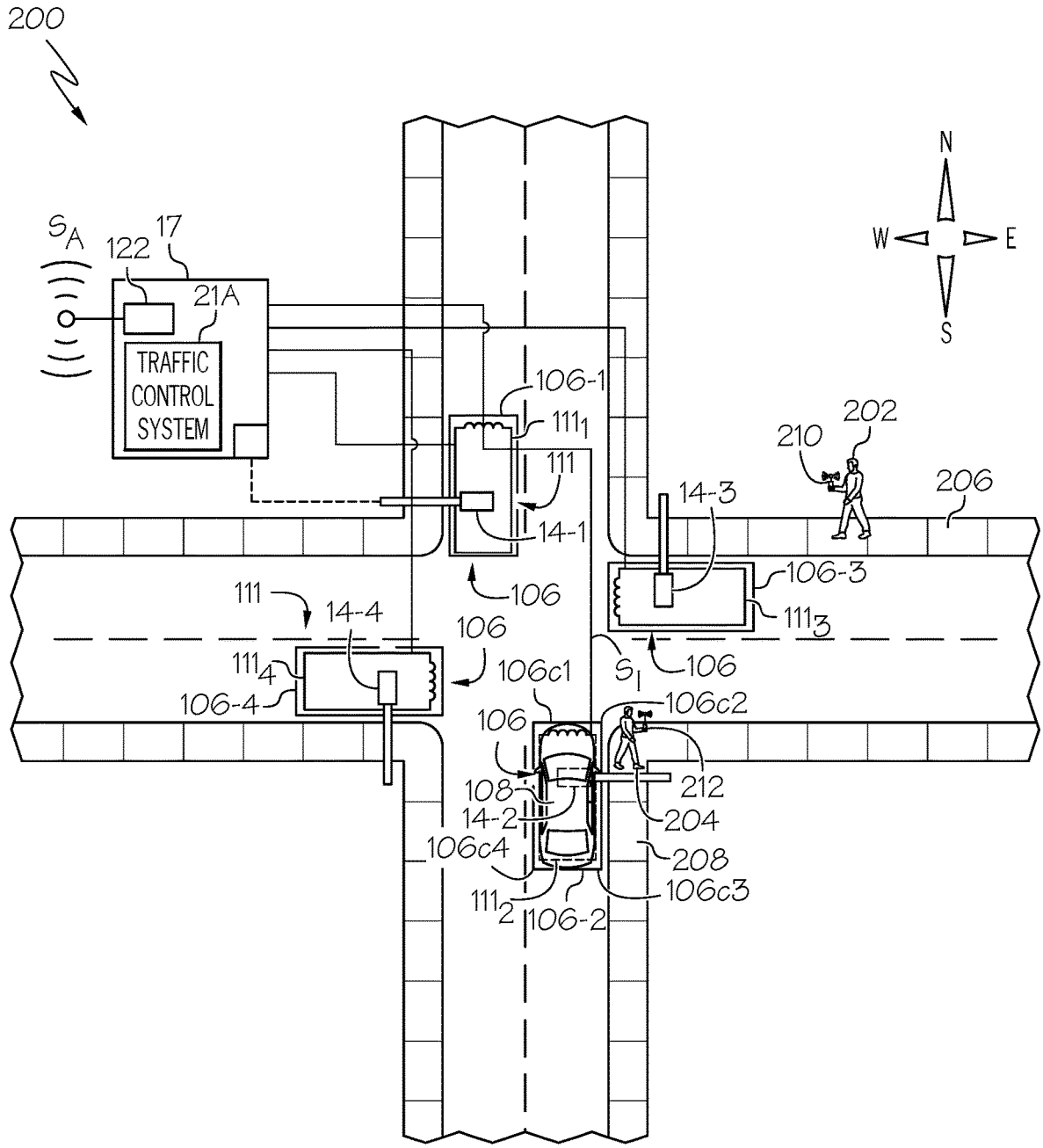
200
S_A
122
17
21A
TRAFFIC CONTROL SYSTEM
N
W
E
S
106-1
111_1
111
14-1
106
14-3
106-3
111_3
210
202
206
111
14-4
106
111_4
106-4
106c1
S_1
106
106c2
108
14-2
106c4
111_2
106-2
212
204
208
106c3

FIG. 18

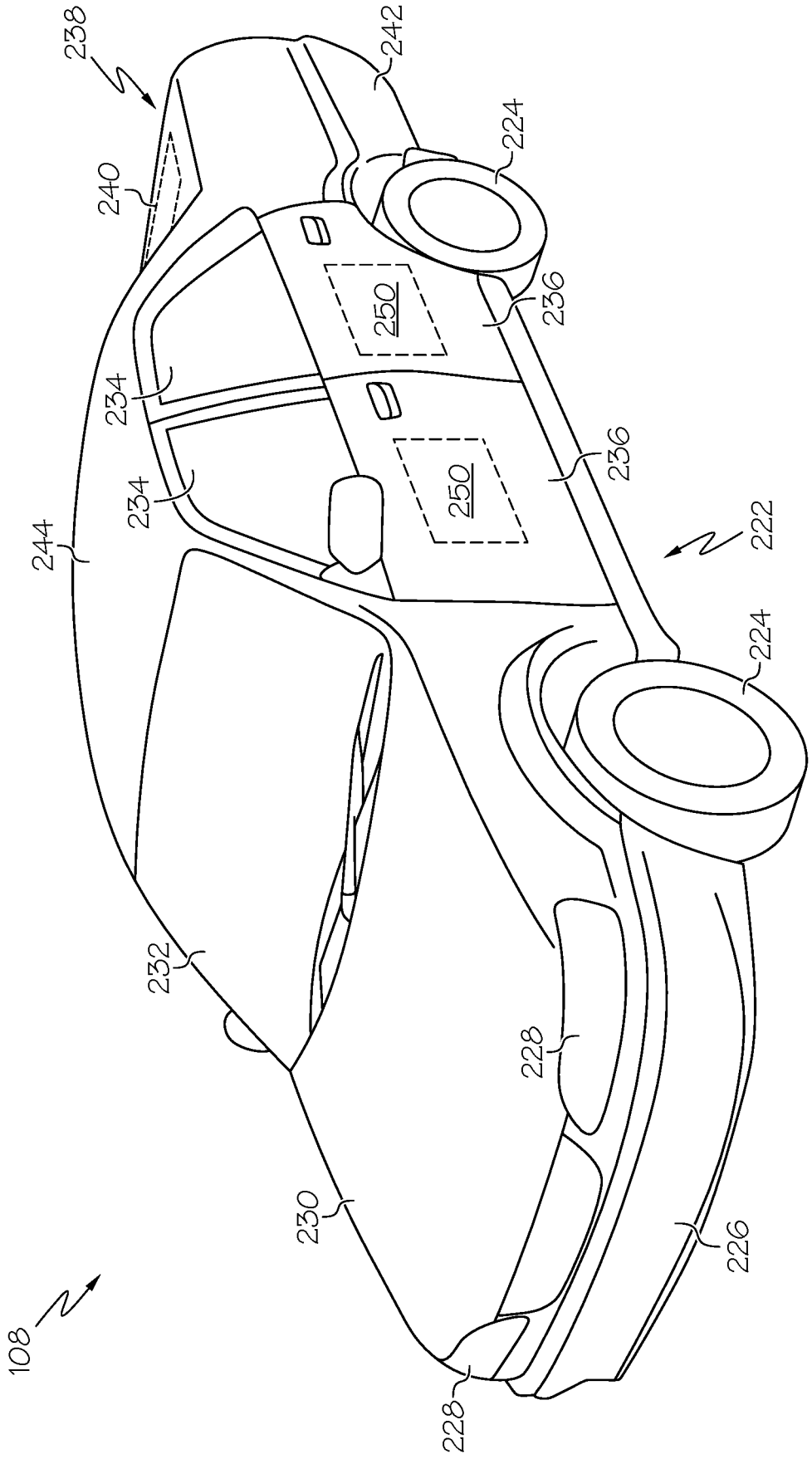
238
242
240
224
250
236
234
250
236
234
244
222
224
232
228
230
226
228
108

FIG. 19

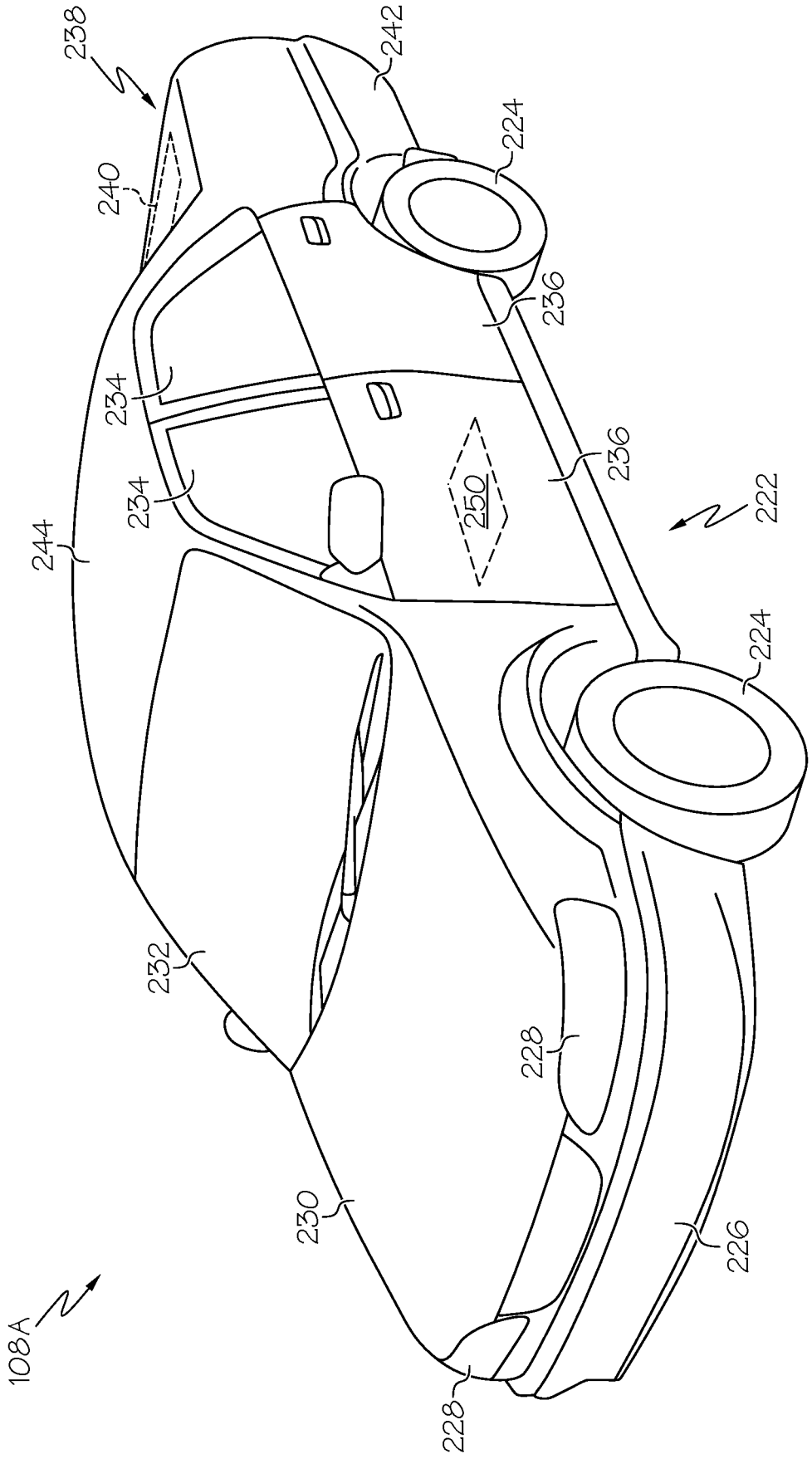
238
242
224
240
236
234
236
234
250
222
244
224
232
228
230
226
228
108A

FIG. 20

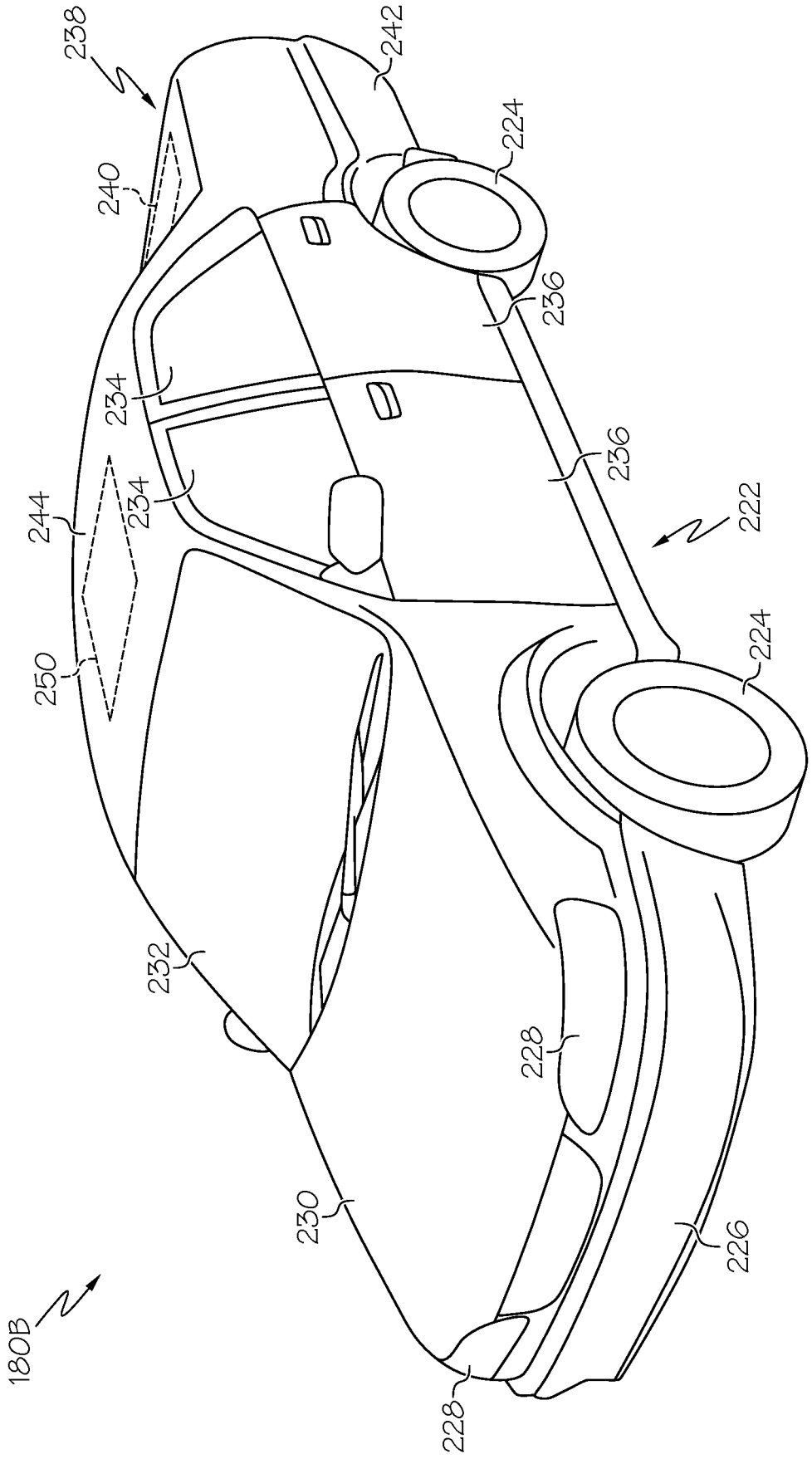
238
242
224
240
236
234
236
234
244
222
224
250
232
228
230
226
228
180B

FIG. 21

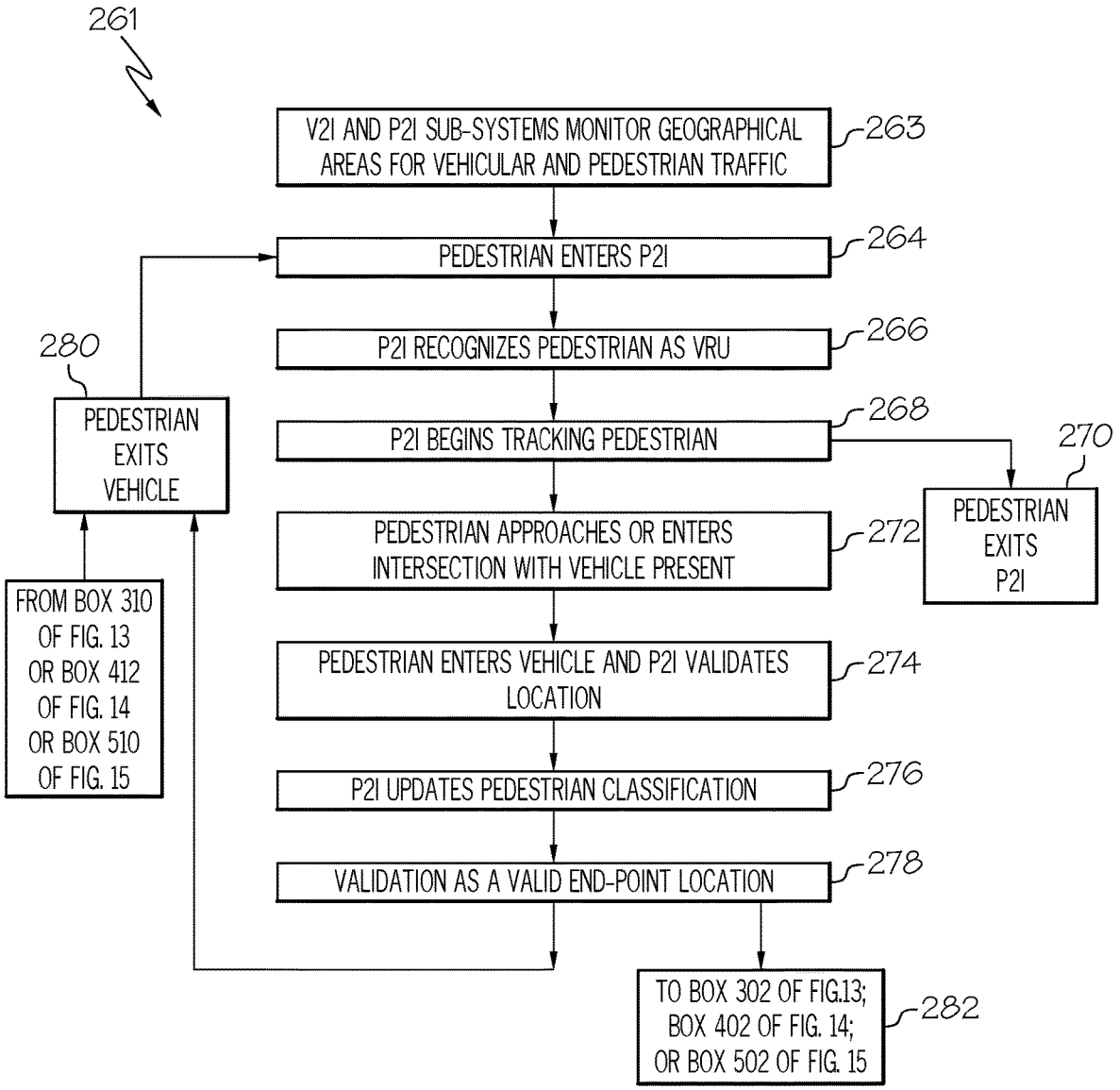
261
V2I AND P2I SUB-SYSTEMS MONITOR GEOGRAPHICAL AREAS FOR VEHICULAR AND PEDESTRIAN TRAFFIC
263
PEDESTRIAN ENTERS P2I
264
P2I RECOGNIZES PEDESTRIAN AS VRU
266
P2I BEGINS TRACKING PEDESTRIAN
268
270
PEDESTRIAN EXITS P2I
PEDESTRIAN APPROACHES OR ENTERS INTERSECTION WITH VEHICLE PRESENT
272
PEDESTRIAN ENTERS VEHICLE AND P2I VALIDATES LOCATION
274
P2I UPDATES PEDESTRIAN CLASSIFICATION
276
VALIDATION AS A VALID END-POINT LOCATION
278
TO BOX 302 OF FIG.13; BOX 402 OF FIG. 14; OR BOX 502 OF FIG. 15
282
280
PEDESTRIAN EXITS VEHICLE
FROM BOX 310 OF FIG. 13 OR BOX 412 OF FIG. 14 OR BOX 510 OF FIG. 15

FIG. 22

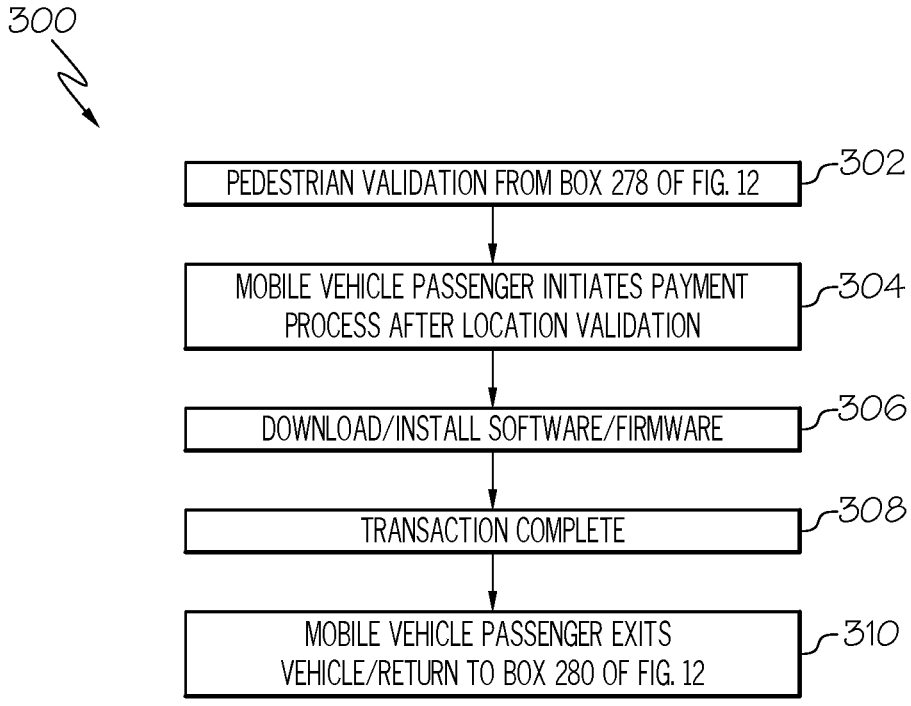
300
PEDESTRIAN VALIDATION FROM BOX 278 OF FIG. 12
302
MOBILE VEHICLE PASSENGER INITIATES PAYMENT PROCESS AFTER LOCATION VALIDATION
304
DOWNLOAD/INSTALL SOFTWARE/FIRMWARE
306
TRANSACTION COMPLETE
308
MOBILE VEHICLE PASSENGER EXITS VEHICLE/RETURN TO BOX 280 OF FIG. 12
310

FIG. 23

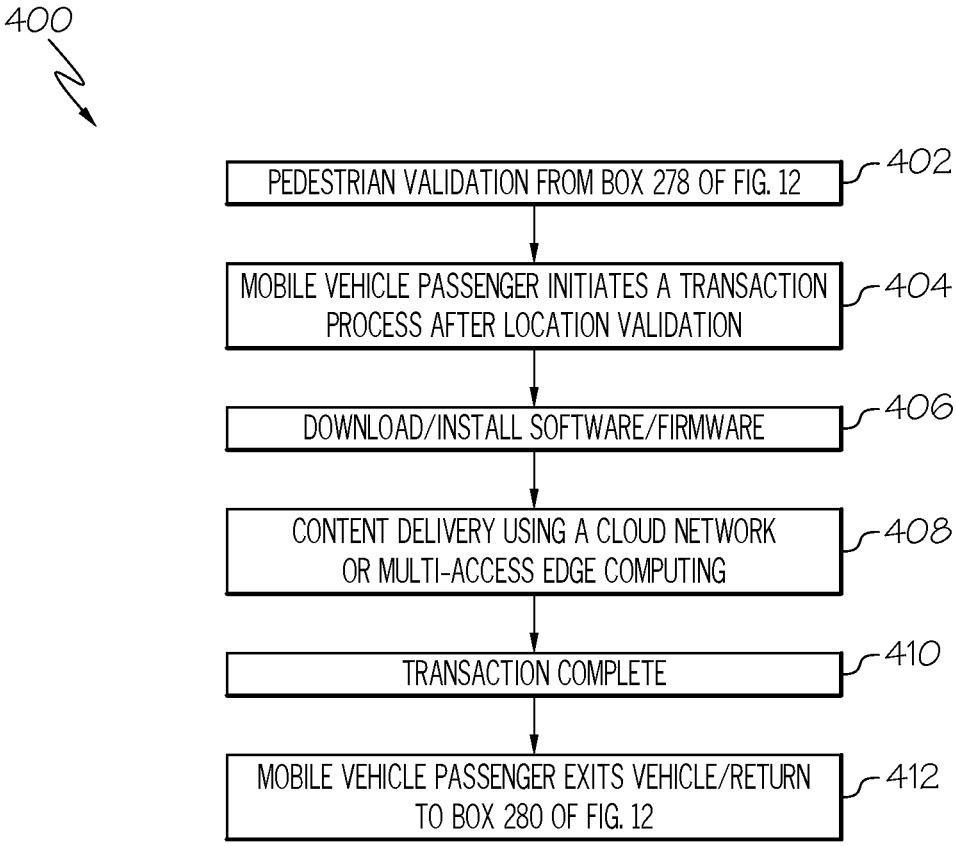
400
PEDESTRIAN VALIDATION FROM BOX 278 OF FIG. 12
402
MOBILE VEHICLE PASSENGER INITIATES A TRANSACTION PROCESS AFTER LOCATION VALIDATION
404
DOWNLOAD/INSTALL SOFTWARE/FIRMWARE
406
CONTENT DELIVERY USING A CLOUD NETWORK OR MULTI-ACCESS EDGE COMPUTING
408
TRANSACTION COMPLETE
410
MOBILE VEHICLE PASSENGER EXITS VEHICLE/RETURN TO BOX 280 OF FIG. 12
412

FIG. 24

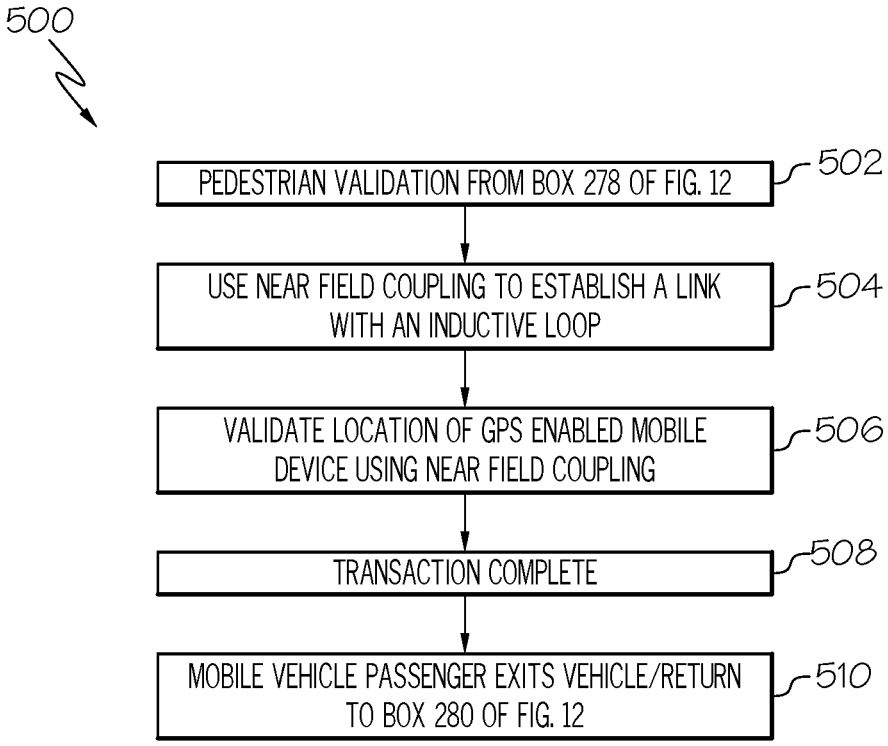
500
PEDESTRIAN VALIDATION FROM BOX 278 OF FIG. 12
502
USE NEAR FIELD COUPLING TO ESTABLISH A LINK WITH AN INDUCTIVE LOOP
504
VALIDATE LOCATION OF GPS ENABLED MOBILE DEVICE USING NEAR FIELD COUPLING
506
TRANSACTION COMPLETE
508
MOBILE VEHICLE PASSENGER EXITS VEHICLE/RETURN TO BOX 280 OF FIG. 12
510

FIG. 25

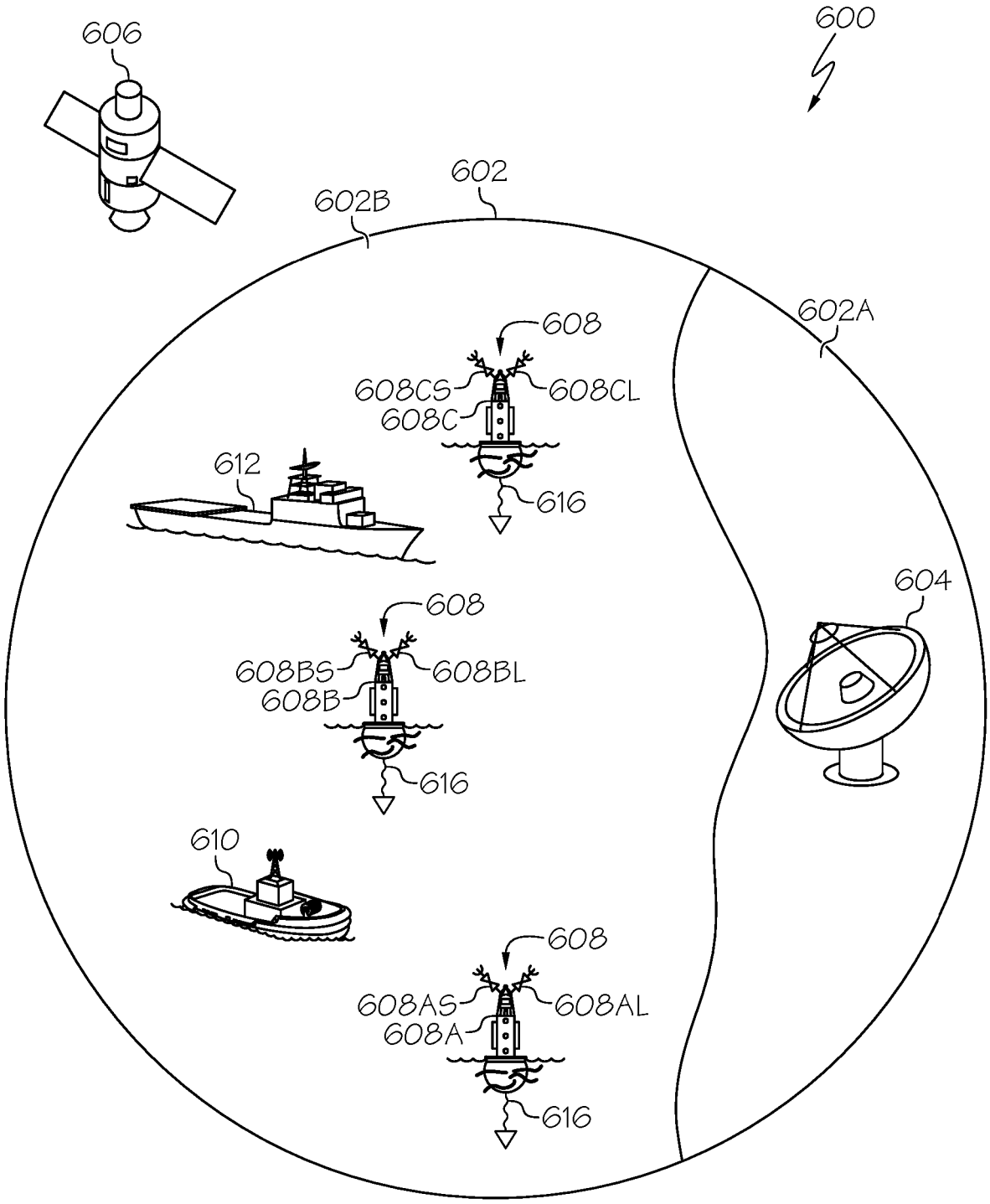
606
600
602
602B
602A
608
608CS
608CL
608C
612
616
604
608
608BS
608BL
608B
616
610
608
608AS
608AL
608A
616

FIG. 26

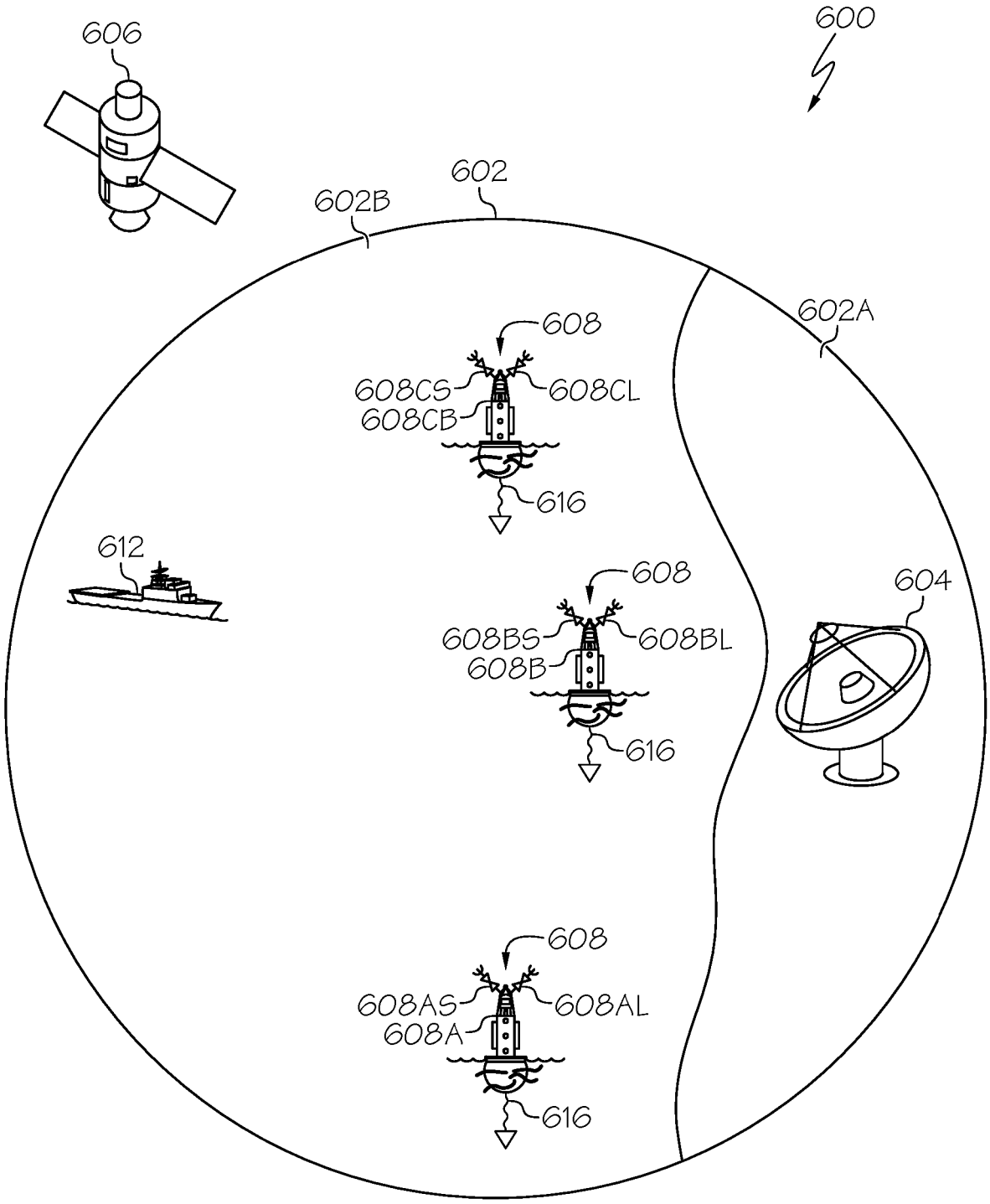
606
600
602
602B
602A
608
608CS
608CL
608CB
616
612
608
608BS
608BL
608B
616
604
608
608AS
608AL
608A
616

FIG. 27

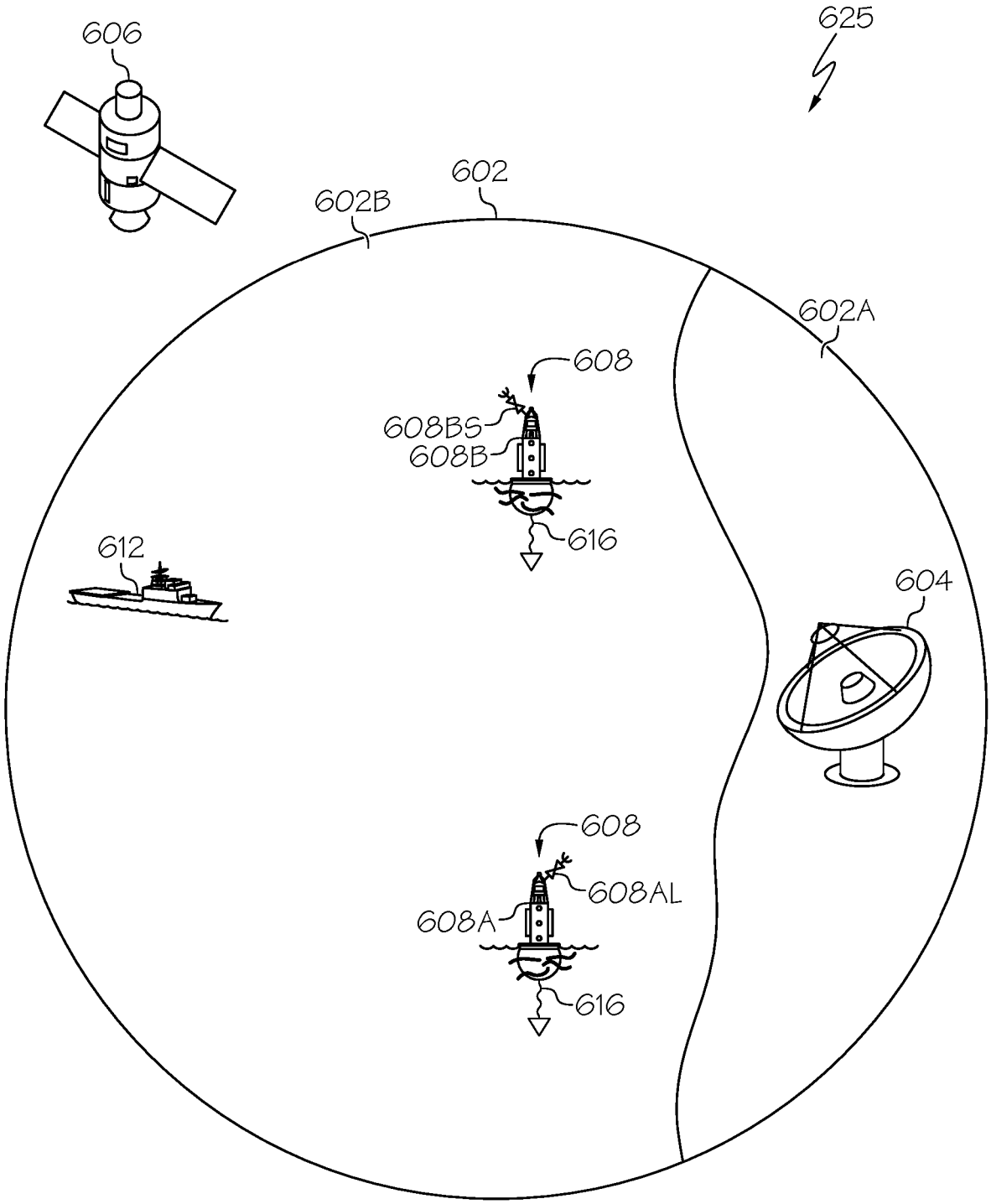
606
625
602
602B
602A
608
608BS
608B
616
612
604
608
608AL
608A
616

FIG. 28

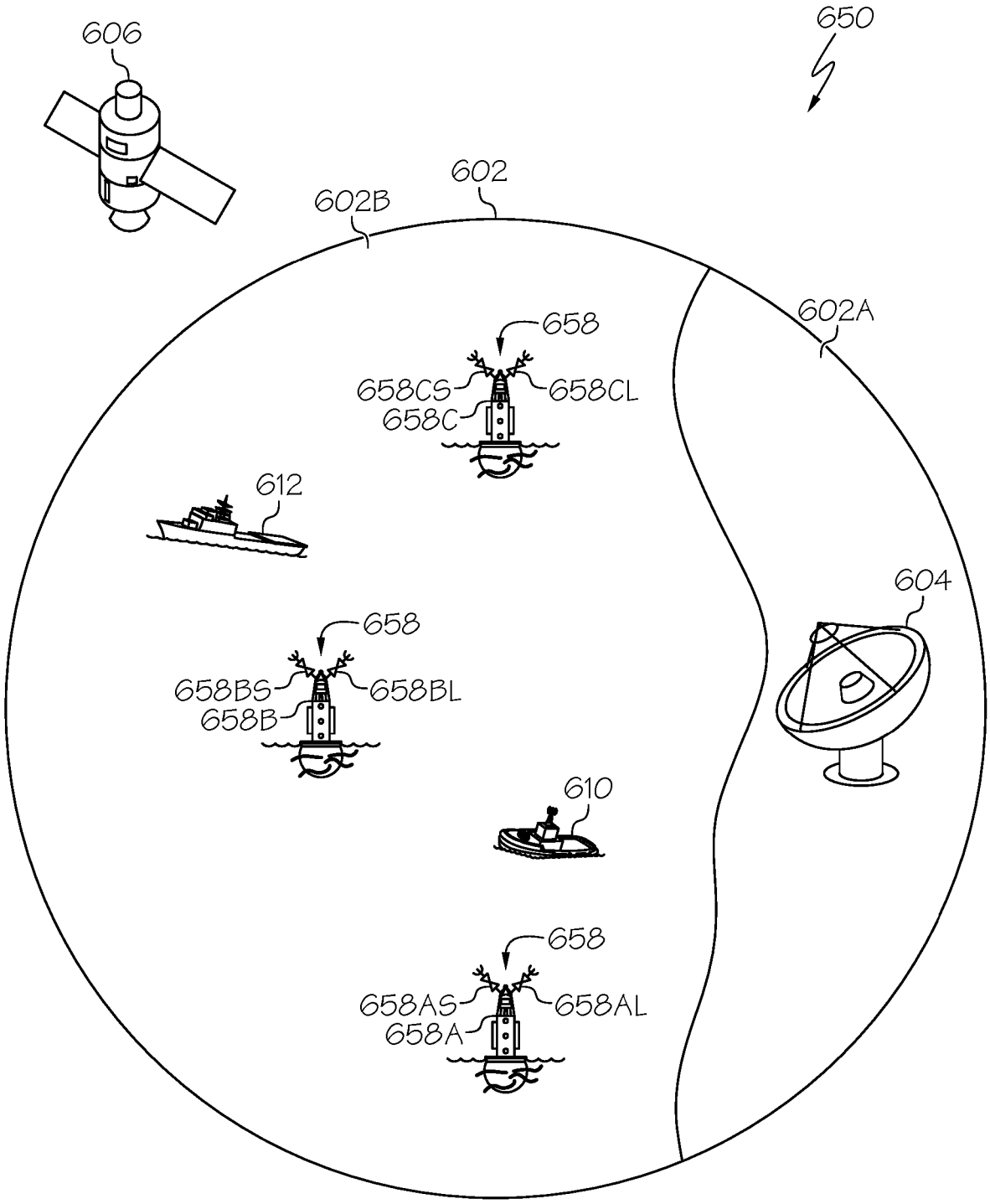
606
650
602
602B
602A
658
658CS
658CL
658C
612
658
658BS
658BL
658B
604
610
658
658AS
658AL
658A

FIG. 29

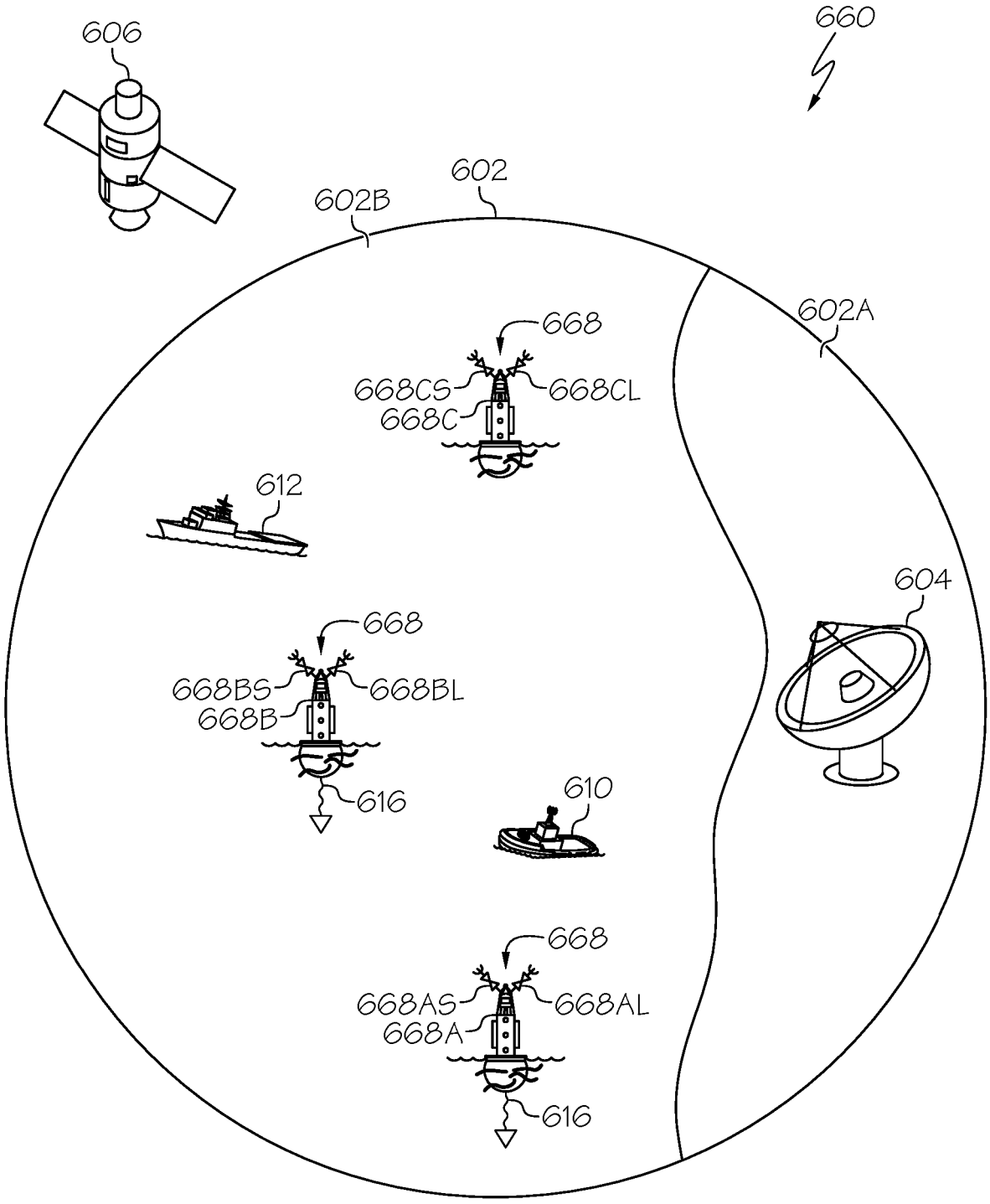
606
660
602
602B
602A
668
668CS
668CL
668C
612
604
668
668BS
668BL
668B
616
610
668
668AS
668AL
668A
616

FIG. 30

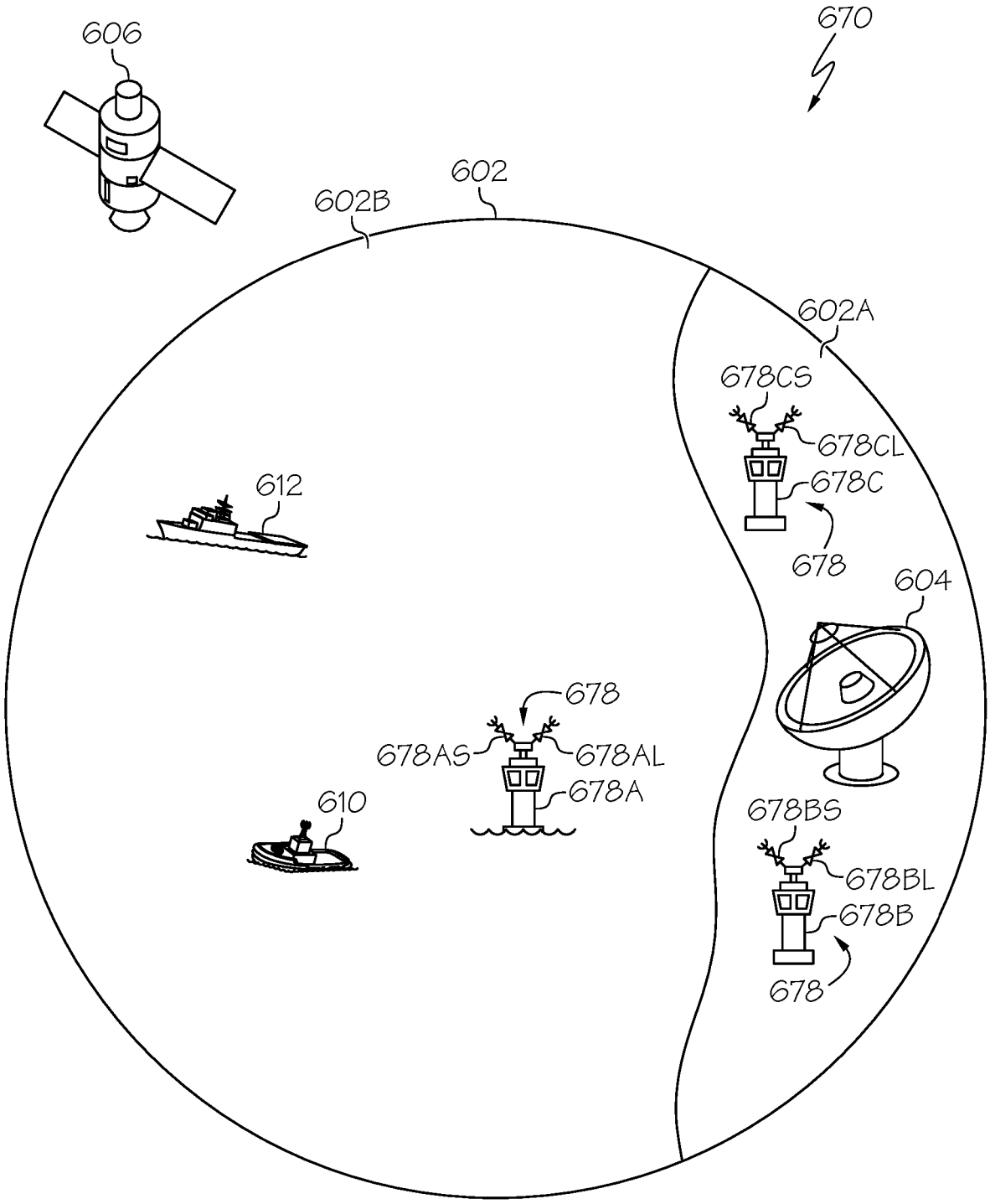
606
670
602
602B
602A
678CS
678CL
678C
678
612
604
678
678AS
678AL
678A
610
678BS
678BL
678B
678

FIG. 31

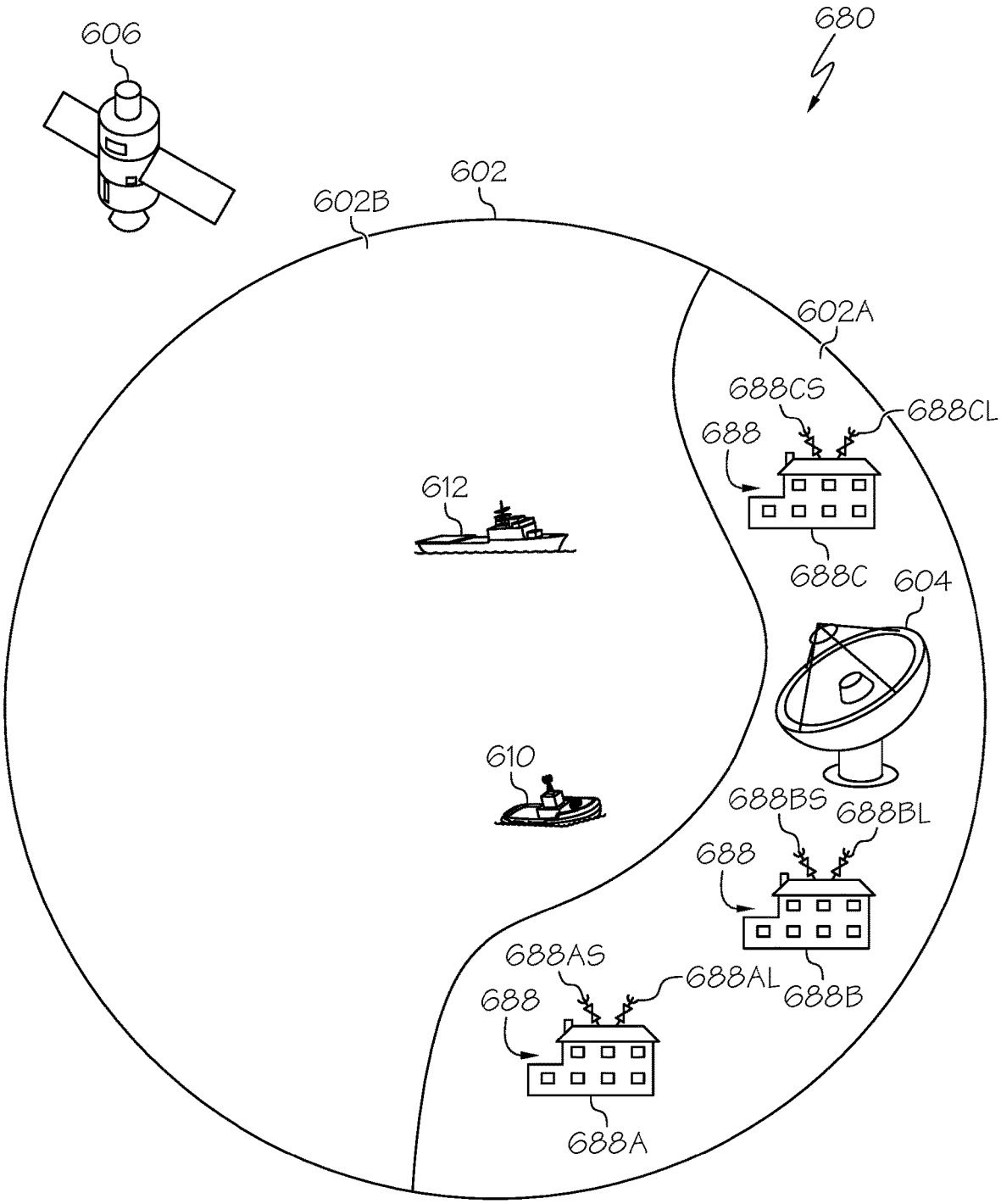
606
680
602
602B
602A
688CS
688CL
688
612
688C
604
610
688BS
688BL
688
688AS
688AL
688
688B
688A

FIG. 32

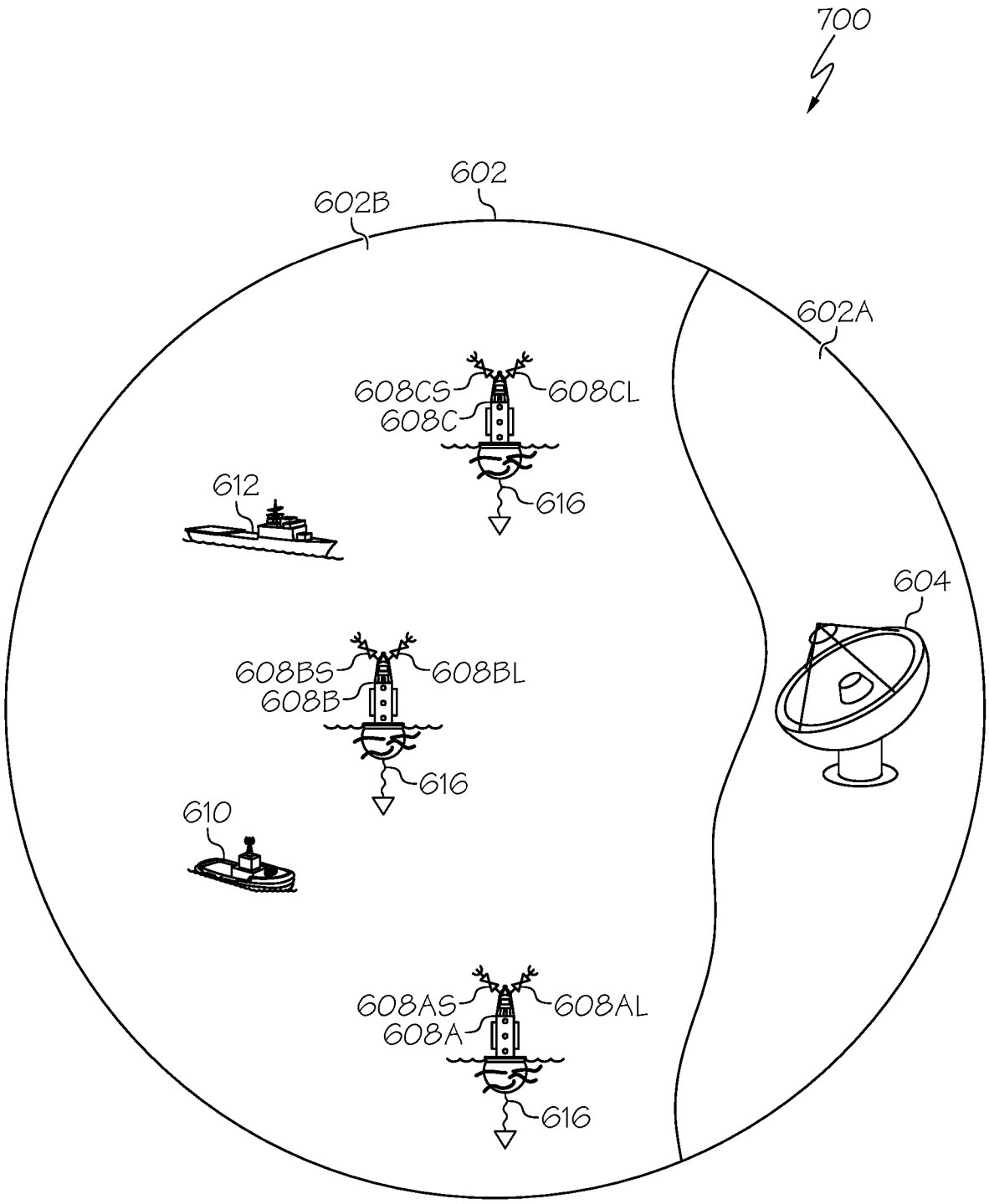
700
602
602B
602A
608CS
608CL
608C
616
612
604
608BS
608BL
608B
616
610
608AS
608AL
608A
616

FIG. 33

METHOD FOR SECURE COMMUNICATIONS AND STRUCTURE THEREFOR

The present invention relates, in general, to secure communications and, more particularly, to secure communications between vehicles and between vehicles and traffic infrastructure.

Traffic control systems are designed to ensure the safety of vehicular and pedestrian traffic. In the past, these systems have included, for example, traffic signal control, malfunction management units, vehicle pre-emption and prioritization devices, data aggregation devices, vehicle detection systems, time synchronization receivers and signal generators, and variable, dual, and multi-mode power supplies operatively coupled together, and enclosed and protected by a control cabinet. These components and assemblies can communicate with traffic signals, other traffic control systems, or with a central command center through hard-wired interconnects, through one or more cloud-based or locally deployed servers, or combinations thereof to control intersections, crosswalks, railroad crossings, or the like.

More recently, with the advent of the Internet of Things, and the Internet of Vehicles, automobile manufacturers and traffic control system manufacturers have begun incorporating digital signaling and communication technologies in their products for the implementation of, for example, Vehicle-to-Vehicle ("V2V"), Vehicle-to-Pedestrian ("V2P"), and Vehicle-to-Infrastructure ("V2I") communications. It should be noted that Vehicle-to-Vehicle ("V2V"), Vehicle-to-Pedestrian ("V2P"), and Vehicle-to-Infrastructure ("V2I") communications are collectively referred to as Vehicle-to-Everything ("V2X") or Cellular V2X communications. Because these systems are based on digital and analog communications technologies for information transmission, cryptographic and network security systems are used to provide secure V2X communications. A common technique used in these systems to verify the authenticity of the devices that are sending and receiving information involves certificate-based authentication using a public key and a private key. In this approach, a server generates a public key and a private key and transmits this information in a certificate signing request to a Certificate Authority for validation. It should be noted that the keys can be generated by an e-mail client or other enabled device. After validation, the Certificate Authority issues a digital certificate that allows parties to recognize each other. In the case of V2V protocols, the certificate facilitates secure communication between two or more vehicles, or traffic infrastructure. In V2I protocols, these certificates may facilitate communications between one or more vehicles and a traffic control system.

Although certificate-based authentication provides a measure of security, these types of systems can still be compromised. For example, the digital certificates may be intercepted and de-encrypted, which would compromise the integrity of the communication.

Accordingly, it would be advantageous to have an improved traffic system and methods that increase the security and integrity of the signal transmission. It would be of further advantage for the improved traffic system and method to be cost efficient to implement.

BRIEF DESCRIPTION OF THE DRAWINGS

The present invention will be better understood from a reading of the following detailed description, taken in conjunction with the accompanying drawing figures, in which like reference characters designate like elements and in which:

FIG. **1** is a top view of a vehicle production line in accordance with an embodiment of the present invention;

FIG. **2** is a top view of, for example, a vehicle dealership in accordance with another embodiment of the present invention;

FIG. **3** is a diagram of a roadway intersection that includes a traffic monitoring system in accordance with an embodiment of the present invention;

FIG. **4** is a diagram of a roadway intersection that includes a traffic monitoring system in accordance with another embodiment of the present invention;

FIG. **5** is a diagram of a roadway intersection that includes a traffic monitoring system in accordance with another embodiment of the present invention;

FIG. **6** is a block diagram of a traffic monitoring system in accordance with another embodiment of the present invention;

FIG. **7** is a diagram of a traffic monitoring system in accordance with another embodiment of the present invention;

FIG. **8** is a flow diagram of a method for location validation and transfer of digital certificates in accordance with an embodiment of the present invention;

FIG. **9** is a flow diagram of a method for location validation and transfer of digital certificates in accordance with an embodiment of the present invention;

FIG. **10** is a flow diagram of a method for location validation and transfer of digital certificates in accordance with an embodiment of the present invention;

FIG. **11** is a diagram of a roadway intersection that includes a traffic monitoring system in accordance with an embodiment of the present invention;

FIG. **12** is a block diagram of a traffic monitoring system in accordance with an embodiment of the present invention;

FIG. **13** is a diagram of a traffic control system in accordance with another embodiment of the present invention;

FIG. **14** is a diagram of a traffic control system in accordance with another embodiment of the present invention;

FIG. **15** is a diagram of a roadway intersection that includes a traffic monitoring system in accordance with another embodiment of the present invention;

FIG. **16** is a diagram of a roadway intersection that includes a traffic monitoring system in accordance with another embodiment of the present invention;

FIG. **17** is a timing diagram of signals of the traffic monitoring system of FIG. **16**;

FIG. **18** is a diagram of a roadway intersection that includes a traffic monitoring system in accordance with an embodiment of the present invention;

FIG. **19** is a perspective side view of a vehicle configured for cooperating with roadway intersection in accordance with an embodiment of the present invention;

FIG. **20** is a perspective side view of a vehicle configured for cooperating with roadway intersection in accordance with an embodiment of the present invention;

FIG. **21** is a perspective side view of a vehicle configured for cooperating with roadway intersection in accordance with an embodiment of the present invention;

FIG. **22** is a flow diagram of a method for validating the location of a pedestrian in accordance with an embodiment of the present invention;

FIG. **23** is a flow diagram of a location validation and payment method in accordance with an embodiment of the present invention;

FIG. **24** is a flow diagram of a location validation and content delivery method in accordance with an embodiment of the present invention;

FIG. **25** is a flow diagram of a location validation method in accordance with an embodiment of the present invention;

FIG. **26** is a diagram of a traffic control system in accordance with another embodiment of the present invention;

FIG. **27** is a diagram of a traffic control system in accordance with another embodiment of the present invention;

FIG. **28** is a diagram of a traffic control system in accordance with another embodiment of the present invention;

FIG. **29** is a diagram of a traffic control system in accordance with another embodiment of the present invention;

FIG. **30** is a diagram of a traffic control system in accordance with another embodiment of the present invention;

FIG. **31** is a diagram of a traffic control system in accordance with another embodiment of the present invention;

FIG. **32** is a diagram of a traffic control system in accordance with another embodiment of the present invention; and

FIG. **33** is a diagram of a traffic control system in accordance with another embodiment of the present invention.

It will be appreciated by those skilled in the art that the words during, while, and when as used herein are not exact terms that mean an action takes place instantly upon an initiating action but that there may be some small but reasonable delay, such as a propagation or processing delay, between the reaction that is initiated by the initial action and the initial action. The use of the word approximately, about, or substantially means that a value of an element has a parameter that is expected to be very close to a stated value or position. However, as is well known in the art there are always minor variances that prevent the values or positions from being exactly as stated.

Terms of enumeration such as "first," "second," "third," and the like may be used for distinguishing between similar elements and not necessarily for describing a particular spatial or chronological order. These terms, so used, are interchangeable under appropriate circumstances. The embodiments of the invention described herein are, for example, capable of use in sequences other than those illustrated or otherwise described herein. Unless expressly stated otherwise, "connected," if used herein, means that one element/node/feature is directly joined to (or directly communicates with) another element/node/feature, and not necessarily mechanically. Likewise, unless expressly stated otherwise, "coupled" means that one element/node/feature is directly or indirectly joined to (or directly or indirectly communicates with) another element/node/feature, and not necessarily mechanically.

The terms "comprise," "include," "have" and any variations thereof are used synonymously to denote non-exclusive inclusion. The terms "left," "right," "in," "out," "front," "back," "up," "down," and other such directional terms are used to describe relative positions, not necessarily absolute positions, in space. The term "exemplary" is used in the sense of "example," rather than "ideal."

DETAILED DESCRIPTION

The following detailed description is merely exemplary in nature and is not intended to limit the range of possible embodiments, implementations, and applications. Furthermore, there is no intention to be bound by any theory presented in the preceding background or the following detailed description.

For simplicity and clarity of illustration, the drawing figures depict the general topology, structure and/or manner of construction of the various embodiments. Descriptions and details of well-known features and techniques may be omitted to avoid unnecessarily obscuring other features. For example, conventional techniques and components related to traffic control devices are not described in detail herein. Elements in the drawing figures are not necessarily drawn to scale, i.e., the dimensions of some features may be exaggerated relative to other elements to assist understanding of the example embodiments.

FIG. **1** is a top view of a vehicle production line **8** at a vehicle manufacturing facility during a step in manufacturing vehicles **12** in accordance with an embodiment of the present invention. Vehicle production line **8** includes three production lanes: LANE **1**, LANE **2**, and LANE **3**. LANE **1** includes inductive loops **16-1**, **16-2**, **16-3**, and **16-4**. LANE **1** further includes a sensor **20-1** connected to a Position Detection Circuit ("PDC") **18-1**, a sensor **20-2** connected to a PDC **18-2**, a sensor **20-3** connected to a PDC **18-3**, and a sensor **20-4** connected to a PDC **18-4**. PDC **18-1**, PDC **18-2**, PDC **18-3**, and PDC **18-4** are connected to a Security Credential Management System ("SCMS") **23** by K interconnects, where K is an integer. It should be noted that SCMS **23** includes, among other things, a Certificate Authority ("CA") **25**, which CA **25** is configured for or capable of delivering one or more certificates to vehicles **12**. The number of certificates per vehicle that can be delivered by CA **25** of SCMS **23** is not a limitation. It should be noted that inductive loop **16-3** is shown as a circle whose boundary is denoted by a broken line because it is under vehicle **12-1** and thus is blocked from view by vehicle **12-1** and that sensor **20-3** is shown as a square whose boundary is denoted by a broken line because it is under vehicle **12-1** and also blocked from view by vehicle **12-1**. It should be further noted that: vehicles are collectively identified by reference character **12**, but for the sake of clarity may be identified by reference character **12** followed by a hyphen and a number, e.g., **12-1**, **12-2**, **12-3**, etc.; inductive loops are collectively identified by reference character **16**, but for the sake of clarity may be identified by reference character **16** followed by a hyphen and a number, e.g., **16-1**, **16-2**, **16-3**, etc.; sensors are collectively identified by reference character **20**, but for the sake of clarity may be identified by reference character **20** followed by a hyphen and a number, e.g., **20-1**, **20-2**, **20-3**, etc.

LANE **2** includes inductive loops **16-5**, **16-6**, **16-7**, and **16-8**. Inductive loop **16-7** is shown as a circle whose boundary is denoted by a broken line because it is under vehicle **12-2** and thus is blocked from view by vehicle **12-2**. LANE **2** further includes a sensor **20-5** connected to PDC **18-1**, a sensor **20-6** connected to PDC **18-2**, a sensor **20-7** connected to PDC **18-3**, and a sensor **20-8** connected to PDC **18-4**. It should be noted that inductive loop **16-7** is shown as a circle whose boundary is denoted by a broken line because it is under vehicle **12-2** and thus is blocked from view by vehicle **12-2** and that sensor **20-7** is shown as a square whose boundary is denoted by a broken line because it is under vehicle **12-2** and also blocked from view by vehicle **12-2**.

LANE **3** includes inductive loops **16-9**, **16-10**, **16-11**, and **16-12**. Inductive loop **16-11** is shown as a circle whose boundary is denoted by a broken line because it is under vehicle **12-3** and thus is blocked from view by vehicle **12-3**. LANE **3** further includes a sensor **20-9** connected to PDC **18-1**, a sensor **20-10** connected to PDC **18-2**, a sensor **20-11** connected to PDC **18-3**, and a sensor **20-12** connected to PDC **18-4**. Sensors **20-3**, **20-7**, and **20-11** are illustrated as boxes whose boundaries are denoted by broken lines because they are hidden from view by vehicles **12-1**, **12-2**, and **12-3**, respectively. It should be noted that inductive loop **16-11** is shown as a circle whose boundary is denoted by a broken line because it is under vehicle **12-3** and thus is blocked from view by vehicle **12-3** and that sensor **20-11** is shown as a square whose boundary is denoted by a broken line because it is under vehicle **12-3** and also blocked from view by vehicle **12-3**.

Vehicles **12** each possess many features known to those skilled in the art, including, but not limited to, a body, a roof, tires, windows, and engine, etc. Because these features are commonly known they have not been specifically identified. Each vehicle **12** also have an On-Board Unit ("OBU"). For example, vehicles **12-1**, **12-2**, and **12-3** include OBU's **12-1**U, **12-2**U, and **12-3**U, respectively. OBUs **12-1**U, **12-2**U, and **12-3**U are illustrated as boxes bounded by broken lines because they are built into vehicles **12** and are hidden from view. It should be noted that only three vehicles **12-1**, **12-2**, and **12-3** have been shown, but typically more than three vehicles would be present in a production facility.

Sensors **20-1**, **20-5**, and **20-9** sense whether a vehicle is over inductive loops **16-1**, **16-5**, and **16-9**, respectively, and transmit signals to PDC **18-1** indicating whether vehicles are or are not present over one or more of inductive loops **16-1**, **16-5**, and **16-9**. PDC **18-1** transmits a signal to SCMS **23** indicating whether any vehicles are present in LANES **1**, **2**, and **3**, and which of inductive loops **16-1**, **16-5**, and **16-9** the vehicle or vehicles are in position to communicate with SCMS **23**. More particularly, PDC **18-1** indicates whether a vehicle **12** is positioned to be able to communicate with inductive loop **16-1**, a vehicle **12** is positioned to be able to communicate with inductive loop **16-5**, and a vehicle **12** is positioned to be able to communicate with inductive loop **16-9**.

Similarly, sensors **20-2**, **20-6**, and **20-10** sense whether a vehicle is over inductive loops **16-2**, **16-6**, and **16-10**, respectively, and transmit signals to PDC **18-2** indicating whether a vehicle is or is not present over one or more of inductive loops **16-2**, **16-6**, and **16-10**. PDC **18-2** transmits a signal to a SCMS **23** indicating whether any vehicles are present in LANES **1**, **2**, and **3**, and which of inductive loops **16-2**, **16-6**, and **16-10** the vehicle or vehicles are in position to communicate with SCMS **23**. More particularly, PDC **18-2** indicates whether a vehicle **12** is positioned to be able to communicate with inductive loop **16-2**, a vehicle **12** is positioned to be able to communicate with inductive loop **16-6**, and a vehicle **12** is positioned to be able to communicate with inductive loop **16-10**.

Sensors **20-3**, **20-7**, and **20-11** sense whether a vehicle **12** is over inductive loops **16-3**, **16-7**, and **16-11**, respectively, and transmit signals to PDC **18-3** indicating whether a vehicle is or is not present over one or more of inductive loops **16-3**, **16-7**, and **16-11**. PDC **18-3** transmits a signal to SCMS **23** indicating whether any vehicles are present in LANES **1**, **2**, and **3**, and which of inductive loops **16-3**, **16-7**, and **16-11** the vehicle or vehicles are in position to communicate with SCMS **23**. More particularly, PDC **18-3** indicates whether a vehicle **12** is positioned to be able to communicate with inductive loop **16-3**, a vehicle **12** is positioned to be able to communicate with inductive loop **16-7**, and a vehicle **12** is positioned to be able to communicate with inductive loop **16-11**. It should be noted that inductive loops **16** operate as near field coupled loop antennas that communicate with the onboard units of vehicles **12**.

Sensors **20-4**, **20-8**, and **20-12** sense whether a vehicle is over inductive loops **16-4**, **16-8**, and **16-12**, respectively, and transmit signals to PDC **18-4** indicating whether a vehicle is or is not present over one or more of inductive loops **16-4**, **16-8**, and **16-12**. PDC **18-4** transmits a signal to a SCMS **23** indicating whether a vehicle is present in LANES **1**, **2**, and **3**, and which of inductive loops **16-4**, **16-8**, and **16-12** the vehicle or vehicles are in position to communicate with SCMS **23**. More particularly, PDC **18-4** indicates whether a vehicle **12** is positioned to be able to communicate with inductive loop **16-4**, a vehicle **12** is positioned to be able to communicate with inductive loop **16-8**, and a vehicle **12** is positioned to be able to communicate with inductive loop **16-12**. It should be noted that for the sake of clarity only three vehicles are shown as being present in vehicle production facility **8** and that vehicles may be present over one or all inductive loops **16-1** to **16-12**. Although the production facility is shown and described as including sensors and position detection circuits, this is not a limitation. For example, vehicle production facility **8** can be configured so that the vehicles are moved along LANES **1**, **2**, and **3** using a conveyor system that is programmed to stop the vehicles at the desired positions above inductive loops **16-1** to **16-12**.

It should be appreciated that the term vehicles is not limited to automobiles, but can refer to trucks, motorcycles, trains, boats, airplanes, drones, autonomous vehicles, semi-autonomous vehicles, or the like.

In operation, vehicles **12** are positioned over corresponding inductive loops **16**. In the example of FIG. **1**, three vehicles **12-1**, **12-2**, and **12-3** are positioned in LANE **1**, LANE **2**, and LANE **3**, respectively, so that vehicle **12-1** is positioned over inductive loop **16-3**, vehicle **12-2** is positioned over inductive loop **16-7**, and vehicle **12-3** is positioned over inductive loop **16-11**. Once positioned, sensors **20-3**, **20-7**, and **20-11** transmit signals to PDC **18-3**, which sends position verification signals to SCMS **23** to verify that vehicles **12-1**, **12-2**, and **12-3** are ready to receive digital certificates from CA **25**. Accordingly, in response to the verification signals from PDC **18-3**, SCMS **23** instructs CA **25** to issue at least one digital certificate to each of vehicles **12-1**, **12-2**, and **12-3**. CA **25** can issue one or more digital certificates to each or vehicles **12-1**, **12-2**, and **12-3**. For example, CA **25** may issue ten thousand digital certificates to each of vehicles **12-1**, **12-2**, and **12-3**. It should be noted that CA **25** may issue the same number of digital certificates to each of the vehicles **12** or CA **25** may issue a different number of digital certificates to each vehicle **12**. Thus, CA **25** may issue five thousand digital certificates to vehicle **12-1**, seven thousand digital certificates to vehicle **12-2**, and ten thousand digital certificates to vehicle **12-3** or the same number of digital certificates to each of vehicles **12-1**, **12-2**, and **12-3**.

One set of digital certificates may be transmitted to inductive loop **16-3**, which serves as a near field coupled loop antenna that transmits the digital certificates to OBU **12-1**U of vehicle **12-1**. Another set of digital certificates may be transmitted to inductive loop **16-7**, which serves as a near field coupled loop antenna that transmits the digital certificates to OBU **12-2**U of vehicle **12-2**. Another set of digital certificates may be transmitted to inductive loop **16-11**, which serves as a near field coupled loop antenna that

transmits the digital certificates to OBU **12-3**U of vehicle **12-3**. The signal from inductive loop **16-11** is received by OBU **12-3**U. Thus, the signal from inductive loop **16-3** is received by OBU **12-1**U; the signal from inductive loop **16-7** is received by OBU **12-2**U; and the signal from inductive loop **16-11** is received by OBU **12-3**U. Accordingly, vehicle manufacturers securely load digital certificates into vehicles at the factory that allow the vehicles to securely communicate with the traffic infrastructure, such as, for example, traffic control devices, other vehicles, autonomous vehicles, or the like.

In accordance with embodiments in which inductive loops **16** serve as near field transmitter antennas, they transmit electromagnetic waves whose characteristics vary in accordance with their distance from each inductive loop **16**. The region close to the inductive loops **16** at which a signal can be received is referred to as the near field region. Thus, for a vehicle to receive a signal from an inductive loop **16** it has to be within the near field region. The near field region ("NFR") is given by Equation 1 ("EQT. 1"):

$$NFR<2*D^2/\lambda \qquad \text{EQT. 1}$$

where

D is the maximum linear dimension of the antenna; and

λ is the wavelength of the electromagnetic waves.

In accordance with alternative embodiments, vehicle production line **8** may be configured to use a hardwired system to deliver digital certificates to each OBU **12**U of a vehicle **12** or it may be configured to use a hybrid wired/wireless system to deliver digital certificates to each OBU **12**U of a vehicle **12**.

For that sake of security, SCMS **23** and CA **25** can use quantum key certificate generation and distribution, which is an application of quantum cryptography, to transmit the digital certificates to vehicles **12**. An advantage of this encryption technique is that it reduces the probability of a third party being able to eavesdrop on the communication between RSU **150**, SCMS **23**, and data aggregator **122** (shown in FIG. **6**). The use of a shared key allows the use of symmetric-key algorithms for secure cryptographic communication.

Alternatively, SCMS **23** and CA **25** use a blockchain technique to transfer digital certificates to the onboard units of vehicles **12**.

FIG. **2** is a top view of a portion of, for example, a vehicle dealership **51** in accordance with another embodiment of the present invention. Vehicle dealership **51** receives vehicles from a vehicle manufacturer or customer whose digital certificates have been exhausted. The vehicles received from the manufacturer may or may not come pre-loaded with digital certificates. In instances when the vehicle dealership receives vehicles from the manufacturer with pre-loaded digital certificates, the vehicle dealer can prepare the vehicles for sale without loading digital certificates. In instances in which the vehicle manufacture has not pre-loaded vehicles with digital certificates, the vehicle dealership can load digital certificates into the vehicles, e.g., load the digital certificates into the OBU's of the vehicles. FIG. **2** illustrates an embodiment in which a vehicle dealership has two certificate loading lanes: LANE **1** and LANE **2**. The number of certificate loading lanes is not limited to two, i.e., there can be one, two, three, or more certificate loading lanes. LANE **1** includes inductive loops **56-1** and **56-2**. Inductive loop **56-2** is shown as a circle bounded by a broken line because it is under vehicle **12-1** and thus is blocked from view by vehicle **12-1**.

LANE **1** further includes a sensor **60-1** connected to a Position Detection Circuit ("PDC") **58-1** and a sensor **60-2** connected to a PDC **58-2**. PDC **58-1** is connected to a Security Credential Management System ("SCMS") **23**. Sensor **60-2** is shown as a square bounded by a broken line because it is under vehicle **12-1** and thus blocked from view by vehicle **12-1**. It should be noted that SCMS **23** includes, among other things, a Certificate Authority ("CA") **25**, which CA **25** is configured for or capable of delivering one or more certificates to vehicles **12**. The number of certificates per vehicle that can be delivered by CA **25** of SCMS **23** is not a limitation.

LANE **2** includes inductive loops **56-3** and **56-4**. LANE **2** further includes a sensor **60-3** connected to PDC **58-1** and a sensor **60-4** connected to PDC **58-2**. Inductive loop **56-4** is shown as a circle bounded by a broken line because it is under vehicle **12-2** and thus blocked from view by vehicle **12-2** and sensor **60-4** is shown as a square bounded by a broken line because it is under vehicle **12-2** and thus blocked from view by vehicle **12-2**.

Sensors **60-1** and **60-3** sense whether a vehicle is over inductive loops **56-1** and **56-3**, respectively, and transmit a signal to PDC **58-1** indicating whether a vehicle is or is not present over one or more of inductive loops **56-1** and **56-3**. Sensors **60-2** and **60-4** transmit signals to PDC **58-2** indicating whether a vehicle is or is not present over one or more of inductive loops **56-2** and **56-4**. PDC **58-1** transmits a signal to SCMS **23** indicating whether a vehicle is present in LANES **1** and **2**, and which of inductive loops **56-1** and **56-3** the vehicle is in position to communicate with. More particularly, PDC **58-1** indicates whether vehicles **12** are positioned to be able to communicate with corresponding inductive loops **56-1** and **56-3**.

Similarly, sensors **60-2** and **60-4** sense whether a vehicle is over inductive loops **56-2** and **56-4**, respectively, and transmit signals to PDC **58-2** indicating whether a vehicle is or is not present over one or more of inductive loops **56-2** and **56-4**. PDC **58-2** transmits a signal to SCMS **23** indicating whether a vehicle is present in LANES **1** and **2**, and which of inductive loops **56-2** and **56-4** the vehicle or vehicles are in position to communicate with. More particularly, PDC **58-2** indicates whether vehicles **12** are positioned to be able to communicate with corresponding inductive loops **56-2** and **56-4**.

It should be further noted that: inductive loops are collectively identified by reference character **56**, but for the sake of clarity may be identified by reference character **56** followed by a hyphen and a number, e.g., **56-1**, **56-2**, **56-3**, etc.; sensors are collectively identified by reference character **60**, but for the sake of clarity may be identified by reference character **60** followed by a hyphen and a number, e.g., **60-1**, **60-2**, **60-3**, etc.

In operation, vehicles **12** are positioned over corresponding inductive loops **56**. In the example of FIG. **2**, a vehicle **12-1** is positioned in LANE **1** and a vehicle **12-2** is positioned in LANE **2**, so that vehicle **12-1** is positioned over inductive loop **56-2**, and a vehicle **12-2** is positioned over inductive loop **56-4**. Once positioned, sensors **60-2** and **60-4** transmit signals to PDC **58-2**, which sends verification signals to SCMS **23** to verify that vehicles **12-1** and **12-2** are ready to receive digital certificates issued by CA **25**. Accordingly, in response to the verification signals from PDC **58-2**, SCMS **23** instructs CA **25** to issue at least one digital certificate to each of vehicles **12-1** and **12-2**. By way of example, CA **25** issues ten thousand digital certificates to each of vehicles **12-1** and **12-2**. It should be noted that CA **25** may issue the same number of digital certificates to each

of the vehicles **12** or CA **25** may issue a different number of digital certificates to each vehicle **12**. Thus, CA **25** may issue five thousand digital certificates to vehicle **12-1**, ten thousand digital certificates to vehicle **12-2**, etc.

One set of digital certificates may be transmitted to inductive loop **56-2**, which serves as a near field transmitter antenna that transmits the digital certificates to OBU **12-1**U. Another set of digital certificates may be transmitted to inductive loop **56-4**, which serves as a near field transmitter antenna that transmits the digital certificates to OBU **12-2**U. Thus, the signal from inductive loop **56-2** is received by OBU **12-1**U and the signal from inductive loop **56-4** is received by OBU **12-2**U. Accordingly, vehicle dealers or dealerships load digital certificates into vehicles at their dealership that allow the vehicles to securely communicate with the traffic infrastructure, such as, for example, traffic control devices, other vehicles, autonomous vehicles, or the like.

In accordance with embodiments in which inductive loops **56** serve as near field transmitter antennas, they transmit electromagnetic waves whose characteristics vary in accordance with their distance from inductive loops **56**. The region close to the inductive loops **56** is referred to as the near field region and is given by EQT. 1. As discussed above, a vehicle should be within the near field region to receive a signal, and thus a digital certificate from inductive loops **56**.

In accordance with another embodiment, the OBU's in vehicles **12** are programmed to activate a warning light in the vehicle or send a notification to the vehicle's operator when the number of unused digital certificates falls to a predetermined number. In response to the warning light or a notification, the owner of the vehicle can take it to a dealership such as, for example, vehicle dealership **51**, and re-supply the vehicle with digital certificates using a method like the one described with reference to FIG. **2**. Alternatively, a vehicle maintenance facility could read the number of digital certificates that are available during routine maintenance of the vehicle, and the maintenance facility could alert the owner of the vehicle to have additional digital certificates downloaded to the vehicle's OBU.

In accordance with another embodiment, prior to certificate delivery the vehicles OBUs transmit their GPS coordinates which are compared to known GPS coordinates of inductive loops **16** or **56** to validate the vehicle's location. Thus, the particular vehicle is identified prior to certificate delivery.

For that sake of security, SCMS **23** and CA **25** use quantum key distribution, which is an application of quantum cryptography, to transmit the digital certificates to vehicles **12**. An advantage of this encryption technique is that it reduces the probability of a third party being able to eavesdrop on the communication between RSU **150**, SCMS **23**, and data aggregator **122** (shown in FIG. **6**). The use of a shared key allows the use of symmetric-key algorithms for secure cryptographic communication.

Alternatively, SCMS **23** and CA **25** use a blockchain technique to transfer digital certificates to the onboard units of vehicles **12**.

FIG. **3** is a top view of a four-way intersection **100** controlled by a traffic control system **21** within a controller cabinet **17**. Traffic control system **21** may include a data aggregator **122** and an SCMS **23**, which SCMS **23** includes a CA **25**. Controller cabinet **17** may be referred to as a traffic control cabinet. It should be noted that an SCMS **23** and CA**25** may not be present in controller cabinets **17** in which a jurisdiction does not want digital certificates loaded into vehicles **12** at an intersection such as, for example, intersection **100**. In the example shown in FIG. **3**, traffic control system **21** within controller cabinet **17** controls four signal heads **110**. To distinguish individual signal heads **110**, the signal head at the north location of intersection **100** is identified by reference character **110-1**, the signal head at the south location of intersection **100** is identified by reference character **110-2**, the signal head at the east location of intersection **100** is identified by reference character **110-3**, and the signal head at the west location of intersection **100** is identified by reference character **110-4**. By way of example, signal heads **110-1** and **110-2** may control traffic flow in a north-south direction, including traffic turning into the east-west direction, and signal heads **110-3** and **110-4** may control traffic flow in an east-west direction, including traffic turning into the north-south direction. Cabinet **17** houses a traffic control system, e.g., traffic control system **21**, configured for controlling traffic. Traffic control system **21** may also serve as a traffic monitoring system.

Road side units ("RSU's") **150** are mounted to the support structures to which signal heads **110** are mounted. To distinguish RSU's **150**, the RSU at the northeast location of intersection **100** is identified by reference character **150-1**, the RSU at the southwest location of intersection **100** is identified by reference character **150-2**, the RSU at the southeast location of intersection **100** is identified by reference character **150-3**, and the RSU at the northwest location of intersection **100** is identified by reference character **150-4**. Inductive loops **116** are formed in the roadway and are associated with corresponding signal heads **110** and road side units **150**. Inductive loop **116-1** is electrically connected to RSU **150-1** through an electrical interconnect **118-1**, inductive loop **116-2** is electrically connected to RSU **150-2** through an electrical interconnect **118-2**, inductive loop **116-3** is electrically connected to RSU **150-3** through an electrical interconnect **118-3**, and inductive loop **116-4** is electrically connected to RSU **150-4** through an electrical interconnect **118-4** for communicating with SCMS **23** and CA **25**. Although inductive loops **116-1**, **116-2**, **116-3**, and **116-4** are shown as being connected to RSU's **150-1**, **150-2**, **150-3**, and **150-4**, respectively, through electrical interconnects, this is not a limitation and they may be electrically coupled through wireless connections. It should be noted that in an alternative embodiment, inductive loops **116-1**, **116-2**, **116-3**, and **116-4** can be connected to data aggregator **122** and data aggregator **122** can be connected to RSU **150** either wirelessly or through hardwired connections.

To distinguish inductive loops **116**, the inductive loop at the northeast location of intersection **100** is identified by reference character **116-1**, the inductive loop at the southwest location of intersection **100** is identified by reference character **116-2**, the inductive loop at the southeast location of intersection **100** is identified by reference character **116-3**, and the inductive loop located at the northwest location of intersection **100** is identified by reference character **116-4**.

Although roadside units are shown and described as being mounted to the support structures to which signal heads **110** are mounted, this is not a limitation. For example, roadside units can be placed at any desired location alongside a roadway, above or below the pavement, underground with exposed antennas, in a cabinet, etc.

FIG. **3** further illustrates a vehicle **12-1** carrying an OBU **12-1**U traveling in a northerly direction and a vehicle **12-2** carrying an OBU **12-2**U traveling in a westerly direction. For the sake of clarity, vehicles **12-1** and **12-2** may be referred to collectively as vehicles **12**.

In accordance with an embodiment, the owner of a vehicle ready to receive additional digital certificates may take the

vehicle to a dealership to obtain additional digital certificates as described with reference to FIG. **2**. Alternatively, the vehicle may be configured to request additional digital certificates at an intersection such as intersection **100**. For example, if vehicle **12-2** needs additional digital certificates its OBU **12-2**U may transmit a request to traffic control system **21** for the additional digital certificates using inductive loop **116-1** and RSU **150-1**. Inductive loop **116-1** is electrically connected to RSU **150-1** by an electrical interconnect **118-1**. In response to the request, SCMS **23** validates the request and CA **25** of traffic control system **21** generates the digital certificates and transmits them to inductive loop **116-1**, which operates as a near field antenna and securely transmits the digital certificates to OBU **12-2**U of vehicle **12-2**.

Alternatively, SCMS **23** and CA **25** may generate an inquiry to a vehicle in response to the vehicle being in proximity to an inductive loop in the roadway. The vehicle may respond to the request by indicating that the vehicle does not need additional digital certificates or by indicating that it desires additional digital certificates and sends an enable signal to CA **25** to send the digital certificates. In response to the enable signal from vehicle **12-2**, CA **25** sends the digital certificates to inductive loop **116-1**, which operates as a near field antenna and securely transmits the digital certificates to OBU **12-2**U of vehicle **12-2**.

For the sake of security, SCMS **23** and CA **25** use quantum key distribution, which is an application of quantum cryptography, to transmit the digital certificates to vehicles **12**. An advantage of this encryption technique is that it reduces the probability of a third party being able to eavesdrop on the communication between RSU **150**, SCMS **23**, data aggregator **122**, and vehicle **12**. The use of a shared key allows the use of symmetric-key algorithms for secure cryptographic communication.

Alternatively, SCMS **23** and CA **25** use a blockchain technique to transfer digital certificates to the onboard units of vehicles **12**.

FIG. **4** is a top view of a four-way intersection **100** controlled by a traffic control system **21** within a controller cabinet **17** in accordance with another embodiment of the present invention. The vehicle may be configured to request additional digital certificates at an intersection such as, for example, intersection **100**. For example, if vehicle **12-2** needs additional digital certificates its OBU **12-2**U may transmit a request to traffic control system **21** for the additional digital certificates using inductive loop **116-1** and RSU **150-1**. The request also includes additional identifying information such as, for example, the Vehicle Identification Number ("VIN") of the vehicle. Other identifying information may include cellular subscriber identification module ("SIM") card information, WiFi media access control ("MAC") address, personably identifiable information, or the like. Inductive loop **116-1** is electrically connected to RSU **150-1** by an electrical interconnect **118-1**. In response to the request, SCMS **23** validates the request and confirms the identification of the vehicle using the VIN of the vehicle. Once verified, CA **25** of traffic control system **21** generates the digital certificates and transmits them to inductive loop **116-1**, which operates as a near field antenna and securely transmits the digital certificates to OBU **12-2**U of vehicle **12-2**. In accordance with an embodiment RSU **150**, e.g., RSU's **150-1**, **150-2**, **150-3**, and **150-4**, communicate with traffic control system **21** wirelessly. Alternatively, RSU's can be electrically coupled to traffic control system **21** in a hard wired configuration using electrically conductive interconnects such as, for example, copper wires, optical fibers, etc.

FIG. **5** is a top view of a four-way intersection **100**A controlled by a traffic control system **21** within a controller cabinet **17**. Traffic control system **21** has been described with reference to FIG. **3**. Intersection **100**A differs from intersection **100** in that a verification system **125** is coupled to signal heads **110**. More particularly, verification system **125-1** is coupled to signal head **110-1**, verification system **125-2** is coupled to signal head **110-2**, verification system **125-3** is coupled to signal head **110-3**, and verification system **125-4** is coupled to signal head **110-4**. It should be appreciated that verification systems **125-1**, **125-2**, **125-3**, and **124-4** are collectively referred to as verification system **125**. In accordance with an embodiment, verification system **125** comprises cameras that are used to verify the identity and location of vehicles **12**. By way of example, verification system **125** comprises cameras that take pictures of the license plates of vehicles **12** approaching intersection **100**A. Cameras **125** may be hard wire connected to data aggregator **122** via metallic interconnects, optical fibers, or the like or they may be wirelessly connected to data aggregator **122** via, for example, a radio frequency transmitter. Cameras **125** may be still cameras, video cameras, or a combination thereof and cameras **125** may be configured to transmit DSRC signals, V2V signals, V2X signals, C-V2X signals, 3G signals, 4G signals, 5G signals, GPS signals, or the like. The number of cameras **125-1**, **125-2**, **125-3**, and **125-4** connected to the traffic control system is not limited to four. There may be one, two, three, four, or more cameras connected to the traffic control system.

Accordingly, in response to OBU **12-2**U requesting that traffic control system **21** provide additional digital certificates, camera **125-2** takes a picture of the license plate of vehicle **12-2**, transmits the image to traffic control system **21**, which then verifies the identity of vehicle **12-2** through a central database and the license plate number and validate the global position system ("GPS") location. After vehicle verification and location validation, SCMS **23** validates the request and CA **25** of traffic control system **21** generates the digital certificates and transmits them to inductive loop **116-1**, which operates as a near field antenna and securely transmits the digital certificates to OBU **12-2**U of vehicle **12-2**. It should be noted that the camera may be configured to take a picture of other attributes, rather than the license plate number, including the VIN number, the color of the vehicle, the make and model of the vehicle, facial recognition of the driver of the vehicle, the MAC address of the driver's phone, the MAC address of the vehicle, other personal identification information, or the like.

For that sake of security, SCMS **23** and CA **25** use quantum key distribution, which is an application of quantum cryptography, to transmit the digital certificates to vehicles **12**. An advantage of this encryption technique is that it reduces the probability of a third party being able to eavesdrop on the communication between RSU **150**, SCMS **23**, data aggregator **122**, and vehicles **12**. The use of a shared key allows the use of symmetric-key algorithms for secure cryptographic communication.

Alternatively, SCMS **23** and CA **25** use a blockchain technique to transfer digital certificates to the onboard units of vehicles **12**.

FIG. **6** illustrates another embodiment of a traffic control system **21** that may be within controller cabinet **17** as shown in FIGS. **3**, **4**, and **5**. What is shown in FIG. **6** is traffic control system **21** that includes, for example, a data aggre-

gator **122**, a traffic signal controller **124**, a Malfunction Management Unit ("MMU") **126**, and a time sync signal generator **128**. Traffic signal controller **124** may be referred to as a traffic signal generator and is connected to data aggregator **122** through an electrical interconnect **127**. Malfunction management unit **126** is connected to data aggregator **122** by an electrical interconnect **126**A and to traffic signal controller **124** by an electrical interconnect **126**B. Time sync signal generator **128** is connected to data aggregator **122** by an electrical interconnect **128**A. Traffic control system **21** further includes internal bus interface units **132**A and **132**B, detectors **134**A and **134**B, back panel bus interface units **136**A and **136**B and back panel load switches **138**. Bus interface unit **136**A is connected to detectors **134**A. Bus interface units **132**A and **132**B and detectors **134**A and **134**B are connected to traffic signal controller **124**.

Components in controller cabinet **17** such as, for example, data aggregator **122** may be connected to a cloud-based network of circuit elements **140** such as processors, logic circuits, memory elements, etc. It should be noted that a cloud-based network of circuit elements may be comprised of an internet service based data storage and analysis system and may include a cloud-based server. The cloud-based network of circuit elements may be referred to as a cloud-based computing structure and may be connected to an SCMS **23** and a CA **25**.

FIG. **6** further illustrates that traffic control system **21** may be connected to a traffic signal head such as, for example, signal head **110**, via wiring **142** and switches **143** or via a Dedicated Short Range Communications (DSRC) radio transceiver or a C-V2X radio transceiver **144** via the Ethernet and switches **143**. Switches **143** may be referred to as relays or switching relays and may include solid state relays or electromechanical relays. Transceiver **144** is capable of transmitting signals to a traffic signal head and to cloud-based network of circuit elements **140** and receiving signals from cloud-based network of circuit elements **140**. Alternatively, traffic control system **21** may be connected to a traffic signal head, such as, for example, signal head **110** and to cloud-based network of circuit elements **140** through a cellular based communications system **147** with options of 3G, 4G, 5G, GSM, GPRS, or the like. It should be noted that 3G refers to the third generation of cellular based communications systems, 4G refers to the fourth generation of cellular based communications systems, 5G refers to the fifth generation of cellular based communications systems, GSM refers to a Global System for Mobile Communications, and GPRS refers to a General Packet Radio Service.

Traffic signal head **110** may include lamps **110**A, **110**B, and **110**C, where lamp **110**A emits light in the red spectrum, lamp **110**B emits light in the yellow spectrum, and lamp **110**C emits light in the green spectrum.

In addition, a DSRC radio transceiver or a C-V2X radio transceiver in vehicle **12** may transmit to or receive information from data aggregator **122** via a DSRC radio transceiver or a C-V2X radio transceiver or the cellular based communications system **147**. It should be noted that vehicle **12** shown in FIG. **6** may represent one or all of vehicles **12-1**, **12-2**, and **12-3** shown in FIG. **1** and one or both of vehicles **12-1** and **12-2** shown in FIG. **3**. It should be further noted that vehicles **12** may be the same type of vehicles or different types of vehicles, i.e., vehicle **12-1** shown in FIGS. **3**, **4**, and **5** may be a car and vehicles **12-2** may be a car, a truck, a delivery truck, a motorcycle, a bus, a van, or the like.

Data aggregator **122** transmits and receives real time intersection status signals and may pass signals such as, for example, Bluetooth signals, cellular based signals, Wireless Fidelity ("WiFi") signals, or the like to a cloud-based server through, for example, a cellular modem. Data aggregator **122** is suitable for mounting in traffic control cabinet **17** or other locations associated with the traffic infrastructure and may include antenna ports for a Global Positioning System ("GPS"), Wireless Fidelity ("WiFi"), and Cellular ("Cell") modems; Ethernet input/output ports; input/output ports suitable for use with a Synchronous Data Link Control ("SDLC") communications protocol or an Electronic Industries Alliance ("EIA") **232** communication protocol; a plurality of auxiliary input/output ports, and a power indicator signal. In addition, data aggregator **122** can receive signals from one or more of an inductive loop, a magnetometer, a video detector, a radar system, laser system, Light Detection and Ranging ("LIDAR") system, or the like as illustrated by reference character **149**.

It should be noted that the traffic control system housed in intersection cabinet **17** may communicate with signal heads **110-1**, **110-2**, **110-3**, and **110-4** via metal cables, fiber optic cables, via wireless communications, or the like. Likewise, the traffic control system housed in intersection cabinet **17** may communicate with RSU's **150-1**, **150-2**, **150-3**, and **150-4**. The number of signal heads and RSU's connected to cabinet **17** is not limited to four. There may be one, two, three, four, or more signal heads **110** and RSU's **150** connected to traffic control system **21**.

In accordance with an embodiment, RSU's **150** are connected to traffic signal control system **21** within intersection cabinet **17** in a hardwired electrical interconnection configuration. Thus, RSU's **150** are connected to the traffic signal control circuit by electrical connections such as copper wires, aluminum wires, or the like. Still referring to FIG. **6**, an RSU **150** is shown as being connected to data aggregator **122** of traffic control system **21** by an electrical interconnect **154** and to traffic signal controller **124** by another electrical interconnect **152**. Thus, RSU **150** is shown as being hardwired to traffic control system **21**. By way of example, electrical interconnects **152** are copper wires. It should be noted that an RSU **150** may be connected to traffic control system **21** of FIGS. **3**, **4**, **5**, and **6** in a hardwired configuration.

In accordance with another embodiment, RSU's **150** are connected to traffic signal control system **21** within intersection cabinet **17** in an optical interconnection configuration. RSU's **150** are connected to the traffic signal control circuit by electrical connections where the electrical connections are optical fibers. Thus, RSU's **150** are hardwired to intersection cabinet **17** by optical fibers.

Referring now to FIG. **7**, a high level diagram of a traffic control system such as, for example, traffic control system **21** is shown. What is shown in FIG. **7** is a traffic controller, such as, for example, traffic signal controller **124** shown in FIG. **6** coupled to a data aggregator such as, for example, data aggregator **122** also shown in FIG. **6**. In this example, traffic signal controller **124** is hardwired to data aggregator **122** by an electrical interconnect **127** such as, for example, a copper wire, an aluminum wire, an optical fiber, or the like. Traffic signal controller **124** is coupled to a Road Side Unit ("RSU") such as for example, RSU **150** shown in FIGS. **3**, **4**, **5**, and **6**. In accordance with an embodiment, traffic signal controller **124** is hardwired to RSU **150** through an electrical interconnect **152** and to data aggregator **122** through an electrical interconnect **154**. Thus, RSU **150** may be hardwired to data aggregator **122** through a metal interconnect, an optical interconnect, or the like or RSU **150** and data aggregator **122** may also be configured to communicate wirelessly.

RSU **150** has an antenna **160** configured for transmitting a signal through the cloud based computing structure **164** to a receiving antenna **166** that is connected to data aggregator **122**. In accordance with another embodiment antenna **160** is a portion of a transmitter and antenna **166** is a portion of a receiver. It should be noted that the cloud may include a server system configured to communicate with a central control facility, automobiles, buses, drones, other traffic signal controllers, other data aggregators, etc.

Cloud based computing structure **164** is communicably coupled to a Security Credential Management System ("SCMS") **23**, which SCMS **23** includes a Certificate Authority ("CA") **25** that can create, distribute, and revoke digital certificates. In a public key infrastructure ("PKI")-based approach, chain-validation of certificates may be used to ensure the integrity of the transmitted signal and communication path.

In accordance with an embodiment, traffic signal controller **124** transmits a dedicated short range communication ("DSRC") global position system ("GPS") signal or a C-V2X signal to RSU **150**. In response to the DSRC signal or the C-V2X signal, RSU **150** generates a Certificate Signing Request ("CSR") that is transmitted via cloud based computing structure **164** to SCMS **23**. RSU **150** or other elements of the traffic control system can generate the shared key.

SCMS **23** generates a digital certificate and transmits a signal including the digital certificate to cloud based computing structure **164**, which transmits a signal to receiver **166**, which receiver **166** transmits the signal to data aggregator **122**. Data aggregator **122** transmits the digital certificate to RSU **150**, which can transmit the digital certificate to the on-board unit **12**U of a vehicle **12**.

For that sake of security, SCMS **23** and CA **25** use quantum key distribution, which is an application of quantum cryptography, to transmit the digital certificates to vehicles **12**. An advantage of this encryption technique is that it reduces the probability of a third party being able to eavesdrop on the communication between RSU **150**, SCMS **23**, and data aggregator **122**. The use of a shared key allows the use of symmetric-key algorithms for secure cryptographic communication.

Alternatively, SCMS **23** and CA **25** use a blockchain technique to transfer digital certificates to the onboard units of vehicles **12**.

FIG. **8** is a flow diagram **200** of a method for validating the location of a vehicle such as, for example vehicles **12-1**, **12-2**, and **12-3** described with reference to FIG. **1**. The method may also be used to validate an identity of the vehicle. Vehicle **12-1** is in production LANE **1**, vehicle **12-2** is in production LANE **2**, and vehicle **12-3** is in production LANE **3** (identified by box **202**). Vehicle **12-1** is positioned to be over inductive loop **16-3**, vehicle **12-2** is positioned to be over inductive loop **16-7**, and vehicle **12-3** is positioned to be over inductive loop **16-11** (identified by box **204**). SCMS **23** transmits a signal to vehicles **12-1**, **12-2**, and **12-3** via inductive loops **16-3**, **16-7**, and **16-11**, respectively, to couple inductive loops **16-3**, **16-7**, and **16-11** to vehicles **12-1**, **12-2**, and **12-3**, respectively, and to verify that vehicle **12-1** is in LANE **1** and over inductive loop **16-3**, vehicle **12-2** is in LANE **2** and over inductive loop **16-7**, and vehicle **12-3** is in LANE **3** and over inductive loop **16-11**. Vehicles **12-1**, **12-2**, and **12-3** send verification signals to SCMS **23** confirming their identity and that they are over inductive loops **16-3**, **16-7**, and **16-11**, respectively (identified by box **206**), i.e., SCMS **23** validates the location or identity of vehicles **12-1**, **12-2**, and **12-3**. Vehicles **12-1**, **12-2**, and **12-3** provide their GPS coordinates to SCMS **23**, which SCMS **23** then compares the coordinates of inductive loops **16-3**, **16-7**, and **16-11**, i.e., known coordinates or defined, with the coordinates from vehicles **12-1**, **12-2**, and **12-3**, respectively, to verify that they match. Thus, inductive loops **16** are communicably coupled to vehicles **12**. After SCMS **23** verifies or validates the positions and locations of vehicles **12-1**, **12-2**, and **12-3**, certificate authority **25** transfers digital certificates to vehicles **12-1**, **12-2**, and **12-3** to via inductive loops **16-3**, **16-7**, and **16-11**, respectively (identified by box **208**). After the digital certificates have been delivered, vehicles **12-1**, **12-2**, and **12-3** are uncoupled from inductive loops **16-3**, **16-7**, and **16-11**, respectively (identified by box **210**). Vehicles **12-1**, **12-2**, and **12-3** are moved to the next step in the production process (identified by reference character **212**).

FIG. **9** is a flow diagram **251** of a method for validating the location of a vehicle such as, for example vehicles **12-1** and **12-2** described with reference to FIG. **2**. The method may also be used to validate an identity of the vehicle or vehicles. Vehicles are delivered to, for example, an automobile dealership and positioned so that vehicle **12-1** is in LANE **1** and vehicle **12-2** is in LANE **2** (identified by box **252**). Vehicle **12-1** is positioned to be over inductive loop **56-2** and vehicle **12-2** is positioned to be over inductive loop **56-4** (identified by box **254**). SCMS **23** transmits a signal to vehicles **12-1** and **12-2** via inductive loops **56-2** and **56-4**, respectively, to couple inductive loops **56-1** and **56-4** to vehicles **12-1** and **12-2**, respectively, and to verify their identity and location and that vehicle **12-1** is in LANE **1** and over inductive loop **56-2** and vehicle **12-2** is in LANE **2** and over inductive loop **56-4**. Vehicles **12-1** and **12-2** send verification signals to SCMS **23** confirming their identity and location and that they are over inductive loops **56-2** and **56-4**, respectively (identified by box **256**), i.e., validate the location of vehicles **12-1** and **12-2**. Thus, inductive loops **56** are communicably coupled to vehicles **12**. Vehicles **12-1** and **12-2** provide their GPS coordinates to SCMS **23**, which SCMS **23** then compares the coordinates of inductive loops **56-2** and **56-4**, i.e., known coordinates or defined location, with the coordinates from vehicles **12-1** and **12-2**, respectively, to verify that they match. After SCMS **23** verifies or validates the positions and locations of vehicles **12-1** and **12-2**, certificate authority **25** transfers digital certificates to vehicles **12-1** and **12-2** via inductive loops **56-2** and **56-4**, respectively (identified by box **258**), which inductive loops **56-2** and **56-4** are communicatively coupled to vehicles **12-1** and **12-2**, respectively. After the digital certificates have been delivered, vehicles **12-1** and **12-2** are uncoupled from inductive loops **56-2** and **56-4**, respectively (identified by box **260**). Vehicles **12-1** and **12-2**, are moved to the next step in the inventory process (identified by reference character **262**).

Although FIG. **9** describes the digital certificates being delivered at a vehicle dealership **51**, this is not a limitation of the present invention. For example, the element identified by reference character **51** may be a facility licensed to deliver digital certificates such as a government licensing facility, e.g., a department of motor vehicles, or it may be a repair shop, a shop having a permit to inspect vehicles, a special lane at a toll road that is configured with an inductive loop capable of delivering digital certificates, or the like. For the sake of completeness, FIG. **10** is a flow diagram **290** of a method for validating the location of a vehicle such as, for example vehicle **12-1**, at a facility licensed to issue digital certificates. A vehicle **12-1** arrives at a location licensed to issue a certificate of authority and is positioned to be in a

lane configured with an inductive loop (identified by box **291**). Vehicle **12-1** is positioned to be over the inductive loop (identified by box **292**). The licensed facility has a server that transmits a signal to vehicle **12-1** via the inductive loop to couple the inductive loop to vehicle **12-1**, and to verify the identity of vehicle **12-1** and that vehicle **12-1** is present, in the lane, and over the inductive loop. Vehicle **12-1** sends a verification signal to the server confirming or validating the identity of vehicle **12-1** and that it is over the inductive loop (identified by box **293**). After the server verifies that vehicle **12-1** is present and in position, the certificate authority associated with the server transfers a digital certificate to vehicle **12-1** via the inductive loop (identified by box **294**). After the digital certificates have been delivered, vehicle **12-1** is uncoupled from the inductive loop (identified by box **295**). Vehicle **12-1** exits the facility (identified by reference character **296**).

Although, a plurality of digital certificates has been described as being transferred, it should be understood that a single digital certificate may be transferred.

FIG. **11** is a top view of a four-way intersection **10** controlled by a traffic control system **21**A that is within a controller cabinet **17** (shown in FIG. **12**). Alternatively, the traffic control system can be like traffic control system **21** shown in controller cabinet **17** or a traffic control system **21** shown in FIG. **6**. Traffic control system **21** and **21**A are typically part of an Intelligent Transportation System ("ITS") **15** that includes a Vehicle-to-Infrastructure ("V2I") sub-system and a Pedestrian-to-Infrastructure ("P2I") sub-system **35**. In the example shown in FIG. **11**, traffic control system **21** within controller cabinet **17** controls four signal heads **14**. To distinguish individual signal heads **14**, the signal head at the north location of intersection **10** is identified by reference character **14-1**, the signal head at the south location of intersection **10** is identified by reference character **14-2**, the signal head at the east location of intersection **10** is identified by reference character **14-3**, and the signal head at the west location of intersection **10** is identified by reference character **14-4**. By way of example, signal heads **14-1** and **14-2** may control traffic flow in a north-south direction, including traffic turning into the east-west direction, and signal heads **14-3** and **14-4** may control traffic flow in an east-west direction, including traffic turning into the north-south direction. Cabinet **17** houses a traffic control system, e.g., traffic control system **21**A of FIG. **11**, configured for controlling traffic. Traffic control system **21**A may also serve as a traffic monitoring system.

Referring to FIGS. **11** and **12**, an example of a traffic control system **21**A that may be within controller cabinet **17** is shown. Controller cabinet **17** is configured to support and protect traffic control system **21**A. What is shown in FIG. **12** is traffic control system **21**A that includes, for example, a data aggregator **122**, a traffic signal controller **24**, a Malfunction Management Unit (MMU) **26**, and a time sync signal generator **28**. Traffic signal controller **24** may be referred to as a traffic signal generator and is connected to data aggregator **122** through an electrical interconnect **27**. Malfunction management unit **26** is connected to data aggregator **122** by an electrical interconnect **26**A and to traffic signal controller **24** by an electrical interconnect **26**B. Time sync signal generator **28** is connected to data aggregator **122** by an electrical interconnect **28**A. Traffic control system **21**A further includes internal bus interface units **32**A and **32**B, detectors **34**A and **34**B, back panel bus interface units **36**A and **36**B, and back panel load switches **38**. Bus interface unit **36**A is connected to detectors **34**A and bus interface units **32**A and **32**B and detectors **34**A and **34**B are connected to traffic signal controller **24**.

Components in controller cabinet **17** such as, for example, data aggregator **122** may be connected to a cloud-based network of circuit elements **40** such as processors, logic circuits, memory elements, etc. It should be noted that a cloud-based network of circuit elements may be comprised of an internet service based data storage and analysis system and may include a cloud-based server **40**.

For the sake of completeness, FIG. **12** further illustrates that controller cabinet **17** may be connected to a traffic signal head such as, for example, signal head **14**, via wiring **42** and switches **43** or via a Dedicated Short Range Communications (DSRC) radio transceiver **44** or a C-V2X radio transceiver via the Ethernet and switches **43**. Switches **43** may be referred to as switching relays or relays and may include solid state relays or electromechanical relays. Transceiver **44** is capable of transmitting signals to a traffic signal head and cloud-based network of circuit elements **40** and receiving signals from cloud-based network of circuit elements **40**. Alternatively, controller cabinet **17** may be connected to a traffic signal head, such as, for example, signal head **14** and to cloud-based network of circuit elements **40** through a cellular based communications system **47** with options of 3G, 4G, 5G, GSM, GPRS, or the like. It should be noted that 3G refers to the third generation of cellular based communications systems, 4G refers to the fourth generation of cellular based communications systems, 5G refers to the fifth generation of cellular based communications systems, GSM refers to a Global System for Mobile Communications, and GPRS refers to a General Packet Radio Service.

A Pedestrian-to-Infrastructure ("P2I") sub-system **35** cooperates with data aggregator **122** and with other sections of an intelligent transportation system through, for example, DSRC radio transceiver **44**, a C-V2X radio transceiver, or a transceiver **35**T to monitor and communicate with pedestrian and vehicular traffic. P2I sub-system **35** can provide advisories to a pedestrian, the driver of a vehicle, or other traffic control units regarding environmental conditions, safety issues, traffic accidents, etc. Traffic control system **21**A, cloud based network **40**, RSU **50**, and signal head **14** may form a V2I sub-system **37** or a portion of a V2I sub-system. It should be noted that traffic control system **21**A differs from traffic control system **21** of FIGS. **3**, **4**, **5**, and **6** by the presence of P2I sub-system **35** and the absence of SCSM **23** and CA **25**.

Traffic signal head **14** may include lamps **14**A, **14**B, and **14**C, where lamp **14**A emits light in the red spectrum, lamp **14**B emits light in the yellow spectrum, and lamp **14**C emits light in the green spectrum.

In addition, a DSRC radio transceiver or a C-V2X radio transceiver in a vehicle **108** may transmit information to or receive information from data aggregator **122** via a DSRC radio transmitter or the cellular based communications system **47**. A pedestrian that is identified by reference character **102** or **104** is shown near vehicle **108**

Data aggregator **122** transmits and receives real time intersection status and may pass signals such as, for example, Bluetooth signals, cellular based signals, Wireless Fidelity (WiFi) signals, or the like to a cloud-based server through, for example, a cellular modem. Data aggregator **122** is suitable for mounting in traffic control cabinet **17** and may include antenna ports for a Global Positioning System (GPS), Wireless Fidelity (WiFi) and Cellular (Cell) modems; Ethernet input/output ports; input/output ports suitable for use with a Synchronous Data Link Control

(SDLC) communications protocol or an Electronic Industries Alliance (EIA) **232** communication protocol; a plurality of auxiliary input/output ports, and a power indicator signal. In addition, data aggregator **122** can receive signals from one or more of an inductive loop, a magnetometer, a video detector such as for example a video camera, a still camera, a radar system, laser system, LiDAR (light detection and ranging) system, or the like as illustrated by reference character **49**.

In addition, road side units (RSU's) **50** are mounted to the support structures to which signal heads **14** are mounted. To distinguish RSU's **50**, the RSU at the north location of intersection **10** is identified by reference character **50-1**, the RSU at the south location of intersection **10** is identified by reference character **50-2**, the RSU at the east location of intersection **10** is identified by reference character **50-3**, and the RSU at the west location of intersection **10** is identified by reference character **50-4**. It should be noted that the traffic control system housed in intersection cabinet **17** may communicate with signal heads **14-1**, **14-2**, **14-3**, and **14-4** via metal cables, fiber optic cables, via wireless communications, or the like. Likewise, the traffic control system housed in intersection cabinet **17** may communicate with RSU's **50-1**, **50-2**, **50-3**, and **50-4**. The number of signal heads and RSU's connected to cabinet **17** is not limited to four. There may be one, two, three, four, or more signal heads and RSU's connected to intersection cabinet **17**.

In accordance with an embodiment, RSU's **50** are connected to traffic signal control system **21**A within intersection cabinet **17** in a hardwired electrical interconnection configuration. Thus, RSU's **50** are connected to the traffic signal control circuit by electrical connections **52** such as copper wires, aluminum wires, or the like. Briefly referring to FIG. **12**, an RSU **50** is shown as being connected to data aggregator **122** of traffic control system **21**A by an electrical interconnect **54** and to traffic signal controller **24** by another electrical interconnect **52**. Thus, RSU **50** is shown as being hardwired to traffic control system **21**A. Electrical interconnects **52** and **54** may be copper wires, aluminum wires, fiber optic cables, etc.

In accordance with another embodiment, RSU's **50** are connected to traffic signal control system **21**A within intersection cabinet **17** in an optical interconnection configuration. Accordingly, RSU's **50** are connected to the traffic signal control circuit by electrical connections where the electrical connections are optical fibers. Thus, RSU's **50** are hardwired to intersection cabinet **17** by optical fibers.

Referring now to FIG. **13**, a high level diagram of a traffic control system such as, for example, traffic control system **21**A is shown. What is shown in FIG. **13** is a traffic controller, such as, for example, traffic signal controller **24** shown in FIG. **12** coupled to a data aggregator such as, for example, data aggregator **122** shown in FIG. **12**. In this example, traffic signal controller **24** is hardwired to data aggregator **122** by an electrical interconnect **27** such as, for example, a copper wire, an aluminum wire, an optical fiber, or the like. Traffic signal controller **24** is coupled to a road side unit (RSU) such as for example, RSU **50** shown in FIGS. **11** and **12**. In accordance with an embodiment, traffic signal controller **24** is hardwired to RSU **50** through an electrical interconnect **52** and to data aggregator **122** through an electrical interconnect **54**. Thus, RSU **50** is hardwired to data aggregator **122** through a metal interconnect, an optical interconnect, or the like.

RSU **50** has an antenna **61** configured for transmitting a signal through the cloud **64** to a receiving antenna **66** that is connected to data aggregator **122**. In accordance with another embodiment antenna **61** is a portion of a transmitter and antenna **66** is a portion of a receiver. It should be noted that the cloud may include a server system configured to communicate with a central control facility, automobiles, buses, drones, other traffic signal controllers, other data aggregators, etc.

In operation in accordance with an embodiment, traffic signal controller **24** transmits a dedicated short range communication (DRSC) global position system (GPS) signal or a C-V2X signal to RSU **50**, which in response, transmits a signal to the cloud **64**, which transmits a signal to receiver **66**, which receiver **66** transmits the signal to data aggregator **122**. RSU **50** also transmits the signal to aggregator **122** in a hardwired feedback configuration through electrical interconnect **54**. Data aggregator **122** compares the hardwired feedback signal with the wireless signal transmitted from RSU **50** to the cloud. If there is a mismatch between the hardwired signal received by data aggregator **122** and the wireless signal received by data aggregator **122**, data aggregator **122** generates a comparison signal indicating the mismatch or error or a fault output. The comparison signal may serve as a fault indicator signal or an error signal or it may cause the traffic signal controller **24** to generate the fault indicator signal or the error signal. The fault indicator signal is transmitted to traffic signal controller **24** to indicate that an error detection or event mismatch has occurred.

In accordance with this embodiment, the traffic signal controller **24** transmits a DSRC signal or C-V2X signal to the cloud **64** at 5.9 GigaHertz (GHz) indicating the intersection should be placed in flash mode, where all the traffic signals indicate a flashing red signal so ensure the safety of the intersection.

Thus, data aggregator **122** serves as a DSRC differential GPS message receiver that compares a static transmitted message to a message on file and confirms whether the signal is valid and correct. Data aggregator **122** sends a fault indication signal to traffic controller **24** via a hard wire connection in the event of an error detection or mismatch event so that traffic controller **24** can issue an appropriate control signal.

FIG. **14** is a high level diagram of a traffic control system such as, for example, traffic control system **21**A. What is shown in FIG. **14** is a traffic controller, such as, for example, traffic signal controller **24** shown in FIG. **12** coupled to a data aggregator such as, for example, data aggregator **122** shown in FIG. **12**. In this example, traffic signal controller **24** is hardwired to data aggregator **122** by an electrical interconnect **27**. Electrical interconnect **27** can be, for example, a copper wire, an aluminum wire, an optical fiber, or the like. Traffic signal controller **24** is coupled to a road side unit (RSU) such as, for example, RSU **50** shown in FIGS. **11** and **12**. In accordance with an embodiment, traffic signal controller **24** is hardwired to RSU **50** through an electrical interconnect **52**. In addition, RSU **50** is electrically connected to, for example, data aggregator **122** through an electrical interconnect **54**. Thus, RSU **50** is hardwired to data aggregator **122** through a metal interconnect, an optical interconnect, or the like.

RSU **50** has an antenna **61** configured for transmitting a signal through the cloud **64** to a receiving antenna **66** that is connected to data aggregator **122**. It should be noted that the cloud may include a server system configured to communicate with a central control facility, automobiles, buses, drones, other traffic signal controllers, other data aggregators, etc.

In operation in accordance with an embodiment, traffic signal controller **24** transmits a dedicated short range com-

munication (DRSC) MAP/GID signal or a C-V2X signal to RSU **50**, which in response, transmits a signal to the cloud **64** and in a hardwired feedback configuration to data aggregator **122**. Data aggregator **122** compares the hardwired feedback signal with the wireless signal transmitted from RSU **50** to the cloud, which is then received by data aggregator **122** via receiver antenna **66** to generate a comparison signal. If there is a mismatch between the hardwired signal received by data aggregator **122** and the wireless signal received by data aggregator **122**, data aggregator **122** generates a comparison signal indicating the mismatch. The comparison signal may serve as a fault indicator signal or an error signal or it may cause the traffic signal controller **24** to generate the fault indicator signal or the error signal. The fault indicator signal is transmitted to traffic signal controller **24** to indicate that an error detection or event mismatch has occurred.

In accordance with this embodiment, the traffic signal controller **24** transmits a DSRC signal or C-V2X signal to the cloud **64** at 5.9 GigaHertz (GHz) indicating the intersection should be placed in flash mode, where all the traffic signals indicate a flashing red signal so ensure the safety of the intersection.

It should be noted that the frequency at which traffic signal controller **24** transmits signals is not a limitation. For example, it can transmit at 5.8 GHz or some other desired frequency.

In accordance with this embodiment, data aggregator **122** serves as a DSRC MAP/GID message receiver that compares a static transmitted message to a message on file and confirms whether the signal is valid and correct. Data aggregator **122** sends a fault indication signal to traffic controller **24** via a hard wire connection in the event of an error detection or mismatch event so that traffic controller **24** can issue an appropriate control signal.

FIG. **15** is diagram of a roadway intersection **100** that includes a traffic control system **21**A in accordance with an embodiment of the present invention. Common elements of roadway intersections **10** and **100** have been described with reference to FIGS. **11** and **12**. Roadway intersection **100** further includes one or more image recorders **102** such as, for example, still cameras, video cameras, or a combination of still and video cameras. The cameras are collectively identified by reference character **102**, however, to distinguish individual cameras **102**, the camera associated with signal head **14-1** is identified by reference character **102-1**, the camera associated with signal head **14-2** is identified by reference character **102-2**, the camera associated with signal head **14-3** is identified by reference character **102-3**, and the camera associated with signal head **14-4** is identified by reference character **102-4**. Cameras **102** may be hard wire connected to data aggregator **122** via metallic interconnects, optical fibers, or the like or they may be wirelessly connected to data aggregator **122** via, for example, a radio frequency transmitter.

In addition, each intersection includes a vehicle detection zone **106** from which information regarding the presence or absence of a vehicle **108** can be detected. The vehicle detection zones are collectively identified by reference character **106**, however, to distinguish vehicle detection zones **106**, the vehicle detection zone associated with or adjacent to signal head **14-1** is identified by reference character **106-1**, the vehicle detection zone associated with or adjacent to signal head **14-2** is identified by reference character **106-2**, the vehicle detection zone associated with or adjacent to signal head **14-3** is identified by reference character **106-3**, and the vehicle detection zone associated with or adjacent to signal head **14-4** is identified by reference character **106-4**. Each vehicle detection zone **106-1**, **106-2**, **106-3**, and **106-4** has GPS location boundaries at their corners **106***c***1**, **106***c***2**, **106***c***3**, and **106***c***4** that cooperate to form a rectangular vehicle detection zone. A vehicle detection zone **106** may be referred to as a geofence or a geographic boundary. Vehicle detection zones **106** may have a square shape, a rectangular shape, a circular shape, an elliptical shape, a polygonal shape, or the like. In addition, the vehicle detection zones at an intersection may be different. For example, vehicle detection zone **106-1** may be rectangular, vehicle detection zone **106-2** may be hexagonal, vehicle detection zone **106-3** may be elliptical, and vehicle detection zone **106-4** may be rectangular. Inductive loops **111** are formed in the road and communicate with, for example, data aggregator **122** to indicate the absence or presence of a vehicle **108**. By way of example, inductive loops **111** are hard wire connected to data aggregator **122** via, for example, copper wires, aluminum wires, optical fibers, or the like. Alternatively, inductive loops **111** can be wirelessly connected to data aggregator **122**. Accordingly, inductive loops **111** are communicatively coupled to data aggregator **122**. To distinguish individual vehicle detection devices **111**, a vehicle detection device $\mathbf{111}_1$ is adjacent or associated with signal head **14-1**, a vehicle detection device $\mathbf{111}_2$ is adjacent or associated with signal head **14-2**, a vehicle detection device $\mathbf{111}_3$ is adjacent or associated with signal head **14-3**, and a vehicle detection device $\mathbf{111}_4$ is adjacent or associated with signal head **14-4**.

Cameras **102-1**, **102-2**, **102-3**, and **102-4** may be mounted to the same support structures to which signal heads **14-1**, **14-2**, **14-3**, and **14-4**, respectively, are mounted. The traffic control system housed in intersection cabinet **17** may communicate with cameras **102-1**, **102-2**, **102-3**, and **102-4** via metal cables, via fiber optic cables, via wireless communications, or the like. Cameras **102** may be configured to transmit DSRC signals, vehicle-to-vehicle (V2V) signals, vehicle-to-everything (V2X) signals, cellular vehicle-to-everything (C-V2X) signals, 3G signals, 4G signals, 5G signals, GPS signals, or the like. The number of cameras **102-1**, **102-2**, **102-3**, and **102-4** connected to cabinet **17** is not limited to four. There may be one, two, three, four, or more cameras connected to intersection cabinet **17**.

In operation in which cameras **102** are connected to data aggregator **122** through a wireless connection, a camera such as camera **102-2** monitors the intersection in which vehicle detection zone **106-2** is located. Data is wirelessly transmitted to data aggregator **122** from, for example, camera **102-2** indicating whether a vehicle **108** is present or absent from vehicle detection zone **106-2**. As discussed above, the wireless signal may be a DSRC signal, a V2V signal, a V2X signal, a C-V2X signal, a 3G signal, a 4G signal, a 5G signal, a GPS signal, or the like. Vehicle **108** also transmits a signal to data aggregator **122** that includes GPS location information. Like the signal received by data aggregator **122** from camera **102-2**, the wireless signal received from vehicle **108** may be a DSRC signal, a V2V signal, a V2X signal, a C-V2X signal, a 3G signal, a 4G signal, a 5G signal, a GPS signal, or the like.

Data aggregator **122** compares the signal from camera **102-2** with the wireless signal transmitted from vehicle **108** to generate a comparison signal. The signal from camera **102-2** can be a wireless signal or a hardwired signal. If there is a mismatch between the wireless signal received by data aggregator **122** from camera **102-2** and the wireless signal received by data aggregator **122** from vehicle **108**, it generates a comparison signal. The comparison signal may

serve as a fault indicator signal or an error signal indicating that at least one of the camera **102-2** and the vehicle **108** is transmitting a signal indicating that a vehicle is present in vehicle detection zone **106**. The fault indicator signal is transmitted to traffic signal controller **24** to indicate that a location matching error detection or a location matching event mismatch has occurred.

FIG. **16** is diagram of a roadway intersection **150** that includes a traffic monitoring system **21**A in accordance with an embodiment of the present invention. Common elements of roadway intersections **10** and **150** have been described with reference to FIGS. **11** and **12**. Roadway intersection **150** further includes one or more vehicle detection devices **111**. In accordance with an embodiment, vehicle detection devices **111** may be comprised of an inductive loop which serves as a receiving antenna. Thus, each lane of roadway intersection **150** may include an inductive loop. However, this is not a limitation and fewer than each lane may include a vehicle detection device **111**. To distinguish individual vehicle detection devices **111**, a vehicle detection device $\mathbf{111}_1$ is adjacent or associated with signal head **14-1**, a vehicle detection device $\mathbf{111}_2$ is adjacent or associated with signal head **14-2**, a vehicle detection device $\mathbf{111}_3$ is adjacent or associated with signal head **14-3**, and a vehicle detection device $\mathbf{111}_4$ is adjacent or associated with signal head **14-4**. As discussed with reference to FIG. **15**, each intersection includes a vehicle detection zone **106-1**, **106-2**, **106-3**, and **106-4** having GPS location boundaries at their corners **106***c***1**, **106***c***2**, **106***c***3**, and **106***c***4** that cooperate to form, for example, a rectangular vehicle detection zone. The shape of vehicle detection zones **106** is not a limitation. Vehicle detection zones **106** may have a square shape, a rectangular shape, a circular shape, an elliptical shape, a polygonal shape, or the like. In addition, the vehicle detection zones at an intersection may be different. For example, vehicle detection zone **106-1** may be rectangular, vehicle detection zone **106-2** may be hexagonal, vehicle detection zone **106-3** may be elliptical, and vehicle detection zone **106-4** may be rectangular. Inductive loops **111** are formed in the road and communicate with, for example, data aggregator **122** to indicate the absence or presence of a vehicle **108**. By way of example, inductive loops **111** are hard wire connected to data aggregator **122** via, for example, copper wires, aluminum wires, optical fibers, or the like.

In operation, inductive loops **111** are configured as receiving antennas that receive a signal (S_I) regarding the presence or absence of a vehicle in a vehicle detection zone **106**. The data is transmitted to data aggregator **122** using for example, a hardwire connection. Vehicle **108** also transmits a signal (S_A) to data aggregator **122** that includes GPS location information. The wireless signal received from vehicle **108** may be a DSRC signal, a V2V signal, a V2X signal, a C-V2X signal, a 3G signal, a 4G signal, a 5G signal, a GPS signal, or the like.

Data aggregator **122** compares the wireless signal from inductive loop **111** with the wireless signal transmitted from vehicle **108** to generate a comparison signal. If there is a mismatch between the signal received by data aggregator **122** from inductive loop **111** and the wireless signal received by data aggregator **122** from vehicle **108**, it generates a comparison signal. The comparison signal may serve as a fault indicator signal or an error signal indicating that at least one of inductive loop **111** and the vehicle **108** is transmitting a signal indicating that a vehicle is present in vehicle detection zone **106**. The fault indicator signal is transmitted to traffic signal controller **24** to indicate that a location matching error detection or a location matching event mismatch has occurred.

FIG. **17** is a plot **158** illustrating the signal (S_A) received by data aggregator **122** and the signal (S_I) transmitted by inductive loop **111**. In accordance with the example shown in plot **158**, from times t_0 to t_1, the signal strengths of both signals S_A and S_I are at 0 decibels (dB), indicating that data aggregator **122** receives a signal indicating the absence of vehicle **108** from vehicle detection zone **106** and a vehicle **108** is not over inductive loop **111**. At time t_1, the signal from inductive loop **111** changes to a level that is greater than 0 dB, indicating that a vehicle is over inductive loop **111**. However, the signal received by aggregator **122** indicates that a vehicle **108** is not present over inductive loop **111**. Thus, there is a mismatch detected indicating a signal error. Data aggregator **122** compares signal S_A and S_I and generates a comparison signal indicating the mismatch. Data aggregator **122** may use the comparison signal to indicate that an error condition exists or generate an error signal in response to the comparison signal.

FIG. **18** is a top view of a four-way intersection **200** controlled by a traffic control system **21**A (shown in FIG. **12**) that is within a controller cabinet **17** (shown in FIG. **11**) and is part of an intelligent transportation system that includes a Pedestrian-to-Infrastructure ("P2I") sub-system **35**. An intelligent transportation system may include sub-systems for managing vehicle navigation, traffic signal control, pedestrian monitoring and navigation systems, traffic control systems, vehicle parking systems, etc. FIG. **19** is a perspective side view of a vehicle **108** configured for cooperating with roadway intersection **200**. Four-way intersection **200** is similar to four-way intersections **100** and **150** described with reference to FIGS. **15** and **16**, respectively, wherein like reference characters designate like elements. Vehicle **108** shown in FIG. **12** is another example of a vehicle that may interact with an intersection such as, for example, four-way intersection **200**. FIG. **18** illustrates pedestrians **202** and **204** walking on sidewalks **206** and **208**, respectively. Pedestrians **202** and **204** are carrying GPS enabled mobile communications devices **210** and **212**, respectively. By way of example GPS enabled mobile communications devices **210** and **212** are GPS enabled cellular phones. GPS enabled mobile communications devices are not limited to being cellular phones and may include pagers, personal digital assistants, notebooks, laptops, handheld communications devices, or the like. It should be noted that vehicle **108** is within geofence **106-2**. FIG. **19** is perspective view of a vehicle **108** having a body **222**, tires **224**, a bumper **226**, headlights **228**, a hood, **230**, a windshield **232**, passenger windows **234**, doors **236**, a rear end **238**, a trunk **240** (shown as broken lines because it is hidden from view), a rear bumper **242**, and a top **244**. It should be appreciated that the parts of vehicles are well known to those skilled in the art. The type of vehicle is not limited to being an automobile or car, but can be, for example, passenger vehicles, trucks, motorcycles, boats, airplanes, aerial vehicles, airships, and the like. FIG. **19** further illustrates a communications device **250** having Near Field Coupled ("NFC") antennas mounted in interior portions of vehicle **108**. Communications devices **250** having NFC antennas are shown as being placed behind a sidewall of the driver side and a sidewall of the driver side rear passenger seat. The number and locations of communications devices **250** having NFC antennas is not a limitation of the present invention. For example, communications devices **250** having NFC antennas may be placed behind sidewalls on the driver side and the front passenger side and behind

sidewalls on the front passenger side seat and the driver side rear passenger seat; or behind the sidewalls of the driver side and the front passenger side seats, but not behind the sidewalls of the rear passenger side seats; or behind the sidewalls of the rear passenger side seats, but not behind the sidewalls of the front side passenger seat and the driver side seat, etc.

Briefly referring to FIG. **20**, a vehicle **108**A is shown in which a communications devices **250** having an NFC antenna is shown as being below the driver seat. In accordance with another embodiment, communications devices **250** having NFC antennas can be placed below the driver's seat and below the front passenger side seat. In accordance with yet another embodiment, a communications device **250** having an NFC antenna can be placed beneath the front passenger side seat, but not the driver side seat. In accordance with yet another embodiment, a communications device **250** having NFC antennas is placed beneath the driver side seat, the front passenger side seat, and at least one of the back seats.

Briefly referring to FIG. **21**, a vehicle **108**B is shown in which a communications device **250** having an NFC antenna is shown as being in roof area. It should be noted that the number and locations at which the communications device **250** having an NFC antenna is placed is not a limitation and that the communications device **250** having the NFC antenna may be placed in other locations of vehicle **108**B such as, for example, below the floor, below one or more seats, etc.

FIG. **22** is a flow diagram **261** of a method for validating the location of a pedestrian, such as pedestrians **202** and **204**. For the sake of clarity, FIGS. **18-22** will be described together. In operation, the Pedestrian-to-Infrastructure ("P2I") sub-system **35** monitors geographical areas or regions for communications from Global Positioning System ("GPS") enabled mobile devices, such as, for example, cell phones **212** and **214**. In addition, the intelligent transportation system includes a Vehicle-to-Infrastructure ("V2I") sub-system **37** that monitors vehicular traffic in the geographical areas or regions (identified by box **263** of flow diagram **261**). In response to pedestrian **202** with a GPS enabled mobile device **212** being on or entering sidewalk **208** or a pedestrian on sidewalk **208** who activates their GPS enabled mobile device **212** (identified by box **264**), P2I sub-system **35** establishes a communications link with GPS enabled mobile device **212** and assigns the GPS enabled cell mobile device **212** with an identifier including a status classification such as, for example, a Vulnerable Road User ("VRU") (identified by box **266**). After pedestrian **202** has been identified and assigned a status classification, P2I sub-system **35** assigns an initial GPS location and begins tracking the location, speed, and bearing of pedestrian **202** to be able to generate a broadcast message if pedestrian **202** enters a geofenced location that has been classified as being dangerous or hazardous (identified by box **268**). The pedestrian may exit the sidewalk or leave the geographic boundaries of P2I sub-system **35** (identified by box **270**). Alternatively, the pedestrian could decide to leave the sidewalk and enter a vehicle such as, for example, GPS enabled vehicle **108** (shown in FIG. **18**). It should be noted that four-way intersection **200** (shown in FIG. **18**) has four geofenced locations identified by reference character **108**. Geofenced locations **106** may be included in portions of the roadway where it may be dangerous for a pedestrian to walk in or stop. In this example, geofenced locations **106** are located at intersections where it may be unsafe for the pedestrian **202** to enter. However, the locations and the number of geofenced locations **106** are not limitations of the present invention. Pedestrians having GPS enabled mobile devices **212** approaching or entering geofenced locations **106** will trigger P2I sub-system **35** to issue a warning to GPS enabled vehicle **108** as it approaches or enters a geofenced location **106** and to GPS mobile device **212** (identified by box **272**).

In yet another alternative, vehicle **108** approaches an intersection, enters and stops within a geofenced location such as, for example, geofenced location **106-2** (shown in FIG. **18**). Vehicle **108** broadcasts its GPS location information to a Vehicle-to-Infrastructure ("V2I") sub-system **37** of an intelligent transportation system. In response to pedestrian **202** entering vehicle **108**, communications device **250** having an NFC antenna in vehicle **108** detects and validates the location of pedestrian **102** and GPS enabled mobile device **112** as being inside vehicle **108**. Communications device **250** having an NFC antenna transmits a signal to P2I sub-system **35** that pedestrian **202** having the VRU status classification is now inside vehicle **108** (identified by box **274**). Communications device **250** having an NFC antenna transmits a signal to P2I sub-system **35** validating the location of pedestrian **202** and GPS enabled mobile device **212**. In response to receiving the validation signal of the location of pedestrian **202**, P2I sub-system **35**, which has received the signal containing the location of vehicle **108** from V2I sub-system **37**, updates or changes the status classification of pedestrian **202** from a VRU to being inside vehicle **108** (identified by box **276**). Thus, P2I sub-system **35** notes the prior status classification of GPS enabled mobile device **212** as being VRU, that the device is within a MAP environment, de-notates the status classification, and reclassifies the GPS enabled mobile device **212**, and hence passenger **202**, as a mobile vehicle passenger. The GPS enabled mobile device **212** becomes coupled to vehicle **108** as a validated end-point location for security purposes (indicated by box **278**).

In response to the passenger exiting vehicle **108** (identified by box **280**), the GPS enabled mobile device **212** re-inters P2I sub-system **35**, which is identified by returning to box **264**.

An alternate embodiment is described with reference to FIG. **23**. Thus, FIG. **22** indicates a subsequent step starting at box **302** of FIG. **23** (indicated by box **282**). Another alternate embodiment is described with reference to FIG. **24**. Thus, FIG. **22** also indicates a subsequent step starting at box **402** of FIG. **24** (indicated by box **282**). Another alternate embodiment is described with reference to FIG. **25**. Thus, FIG. **22** also indicates a subsequent step starting at box **502** of FIG. **25** (indicated by box **282**).

FIG. **23** is a flow diagram **300** of a method for operating a GPS enabled mobile device such as, for example, mobile devices **212** and **214** within P2I sub-system **35** in accordance with a location validation and payment embodiment of the present invention. A description of the location validation and payment embodiment continues from box **278** of FIG. **22**, wherein the location of a pedestrian within a vehicle such as, for example, pedestrian **202** (in vehicle **108** of FIG. **18**) has been validated (identified by box **302**). Thus, the pedestrian enabled mobile device location validation and payment process incorporates end-point location validation as described with reference to FIG. **22** into a payment processing process.

After the location of pedestrian **102** within vehicle **108** has been validated and pedestrian **102** has been reclassified from a VRU to being a mobile vehicle passenger, vehicle **108** carrying pedestrian **102** travels along the intelligent

transportation system. If one of the occupants of vehicle **108** decides to make a purchase, vehicle **108** stops at a business to purchase an item. In accordance with an embodiment, the vehicle occupants remain in the vehicle while making the purchase. Thus, the purchase can occur at a drive-thru window of a fast food restaurant, a take-out location at a fast food restaurant, a market, a grocery store, a pool store, any retail establishment that delivers the items purchased to vehicle **108**, a fuel station, a financial institution, or the like. In response to vehicle **108**, which is carrying former pedestrian **102**, stopping at a business to purchase an item, GPS enabled mobile device **212** establishes a link with, for example, the cloud **40** followed by initiating a payment processing program (identified by box **304**).

After the communications link has been established, the server for the business may download or install software or firmware onto GPS enabled mobile device **212** to provide additional security for the transaction (identified by box **306**). The software may include an encryption mechanism such as, for example, asymmetric cryptography to ensure the security of the data being transmitted.

After the transaction is complete, the server associated with the business receives a message from GPS enabled mobile device **212** indicating completion of the transaction and termination of the transaction (indicated by box **308**).

When the mobile vehicle passenger decides to exit the vehicle (identified by box **310**), the vehicle stops to allow the mobile vehicle passenger to exit the vehicle **108** (identified by box **280** of FIG. **12**) so that the GPS enabled mobile device **212** may re-inters P2I sub-system **35** (identified by return to box **264** of FIG. **12**).

FIG. **24** is a flow diagram **400** of a method for operating a GPS enabled mobile device such as, for example, mobile devices **212** and **214** within P2I sub-system **35** in accordance with a location validation and content delivery embodiment of the present invention. A description of a location validation and content delivery embodiment continues from box **278** of FIG. **22**, wherein the location of a pedestrian within a vehicle such as, for example, pedestrian **202** in vehicle **108** of FIG. **18** has been validated (identified by box **402**). Thus, the pedestrian enabled mobile device content delivery validation process incorporates end-point location validation as described with reference to FIG. **22** into a content delivery process.

After the location of pedestrian **102** within vehicle **108** has been validated and pedestrian **102** has been reclassified from a VRU to being a mobile vehicle passenger, vehicle **108** carrying pedestrian **102** travels along the intelligent transportation system. The mobile vehicle passenger may decide to download content from a content provider. The content may be video data, audio data, a combination of video data and audio data, data from a database, data from a document, or the like. GPS enabled mobile device **212** establishes a link with, for example, the cloud **40** followed by initiating a transaction process program (identified by box **404**).

After the communications link has been established, the server for the content provider may download or install software or firmware onto GPS enabled mobile device **212** to provide additional security for the transaction or to complete the transaction (identified by box **406**). The software may include an encryption mechanism such as, for example, asymmetric cryptography to ensure the security of the data being transmitted.

After the content provider has downloaded any security software that may be desired, GPS enabled mobile device **212** and the content provider server in the cloud **40** deliver the desired content using a content delivery mechanism. Alternatively, content provider can use mobile edge computing ("MEC") to deliver the content (identified by box **408**).

It should be noted that partial loading of content may also occur. For example, a vehicle or a mobile vehicle passenger may be travelling from a first location to a second location while temporarily stopping close to an inductive loop configured as a near field coupled antenna. The mobile vehicle passenger may begin downloading content such as, for example, a video using a communications device having its own near field coupled antenna that is coupled to the inductive loop that is configured as a near field coupled antenna. The vehicle may continue its journey resulting in the mobile vehicle passenger's communications device being decoupled from the inductive loop. The vehicle may then establish communications with another inductive loop configured as a near field antenna allowing completion of the content delivery.

When the content delivery is complete, GPS enabled mobile device **212** transmits a transaction or content delivery complete signal to the content provider, e.g., a server in the cloud **40** or the content provider transmits a transaction or content delivery complete signal to GPS enabled mobile device **212** (identified by box **410**).

When the mobile vehicle passenger decides to exit the vehicle (identified by box **412**), the vehicle stops to allow the mobile vehicle passenger to exit the vehicle **108** (identified by box **280** of FIG. **22**) so that the GPS enabled mobile device **212** re-inters P2I sub-system **35** (identified by return to box **264** of FIG. **22**).

FIG. **25** is a flow diagram **500** of a method for operating a GPS enabled mobile device such as, for example, mobile devices **212** and **214** within P2I sub-system **35** in accordance with location validation embodiment of the present invention. A description of the location validation embodiment continues from box **278** of FIG. **22**, wherein the location of a pedestrian within a vehicle such as, for example, pedestrian **202** in vehicle **108** of FIG. **18** has been validated (identified by box **502**). Thus, the location validation process incorporates validation using end-point location validation and near field coupling as described with reference to FIG. **22** into a content delivery process.

After the location of pedestrian **102** within vehicle **108** has been validated and pedestrian **102** has been reclassified from a VRU to being a mobile vehicle passenger, vehicle **108** carrying pedestrian **102** travels along the intelligent transportation system. The GPS enabled mobile device **212** is programmed to include near field coupling as a secondary location validation mechanism. The mobile vehicle passenger within vehicle **108** may want to initiate a secure transaction at, for example, a drive-thru Automatic Teller Machine ("ATM") at a financial institution. The drive-thru lane at the ATM may include an inductive loop that is connected to a server of the financial institution via a data aggregator device **122**. In response to vehicle **108** stopping over the inductive loop, GPS enabled mobile device **212** establishes a link with, for example, the inductive loop using near field coupling (identified by box **504**).

GPS enabled mobile device **212** communicates either directly or indirectly with the server of the financial institution to validate that mobile device **212** is within vehicle **108** that is coupled to the server through the inductive loop (identified by box **506**).

When the transaction is complete, GPS enabled mobile device **212** transmits a signal indicating that the transaction is complete and terminates the process or, alternatively, the

financial institution transmits a signal indicating that the transaction is complete and terminates the process (identified by box **508**).

When the mobile vehicle passenger decides to exit the vehicle (identified by box **510**), the vehicle stops to allow the mobile vehicle passenger to exit the vehicle **108** (identified by box **280** of FIG. **22**) so that the GPS enabled mobile device **212** re-inters P2I sub-system **35** (identified by return to box **264** of FIG. **22**).

It should be noted that the vehicle may include a communications device having an NFC antenna, which may be used to facilitate a transaction rather than a hand held communications devices having an NFC antenna such that the vehicle acts as a pass thru. Thus, a person inside a vehicle with a handheld mobile communications device may not be able to directly couple with, for example, a gas station's transaction transceiver, however, the vehicle may be able to couple with the gas station's transaction transceiver. Accordingly, the person's handheld mobile communications device may couple to the gas station's transaction transceiver through the vehicles NFC antenna.

It should be further noted that the location validation techniques may be used with self driving or autonomous, wherein the self driving vehicle is configured with a device having a near field coupled antenna that can be used for automatically paying for items such as, for example, tolls, gas, vehicle maintenance, etc.

FIG. **26** is an illustration of a maritime traffic monitoring system **600** in accordance with an embodiment of the present invention. What is shown in FIG. **26** is a representation of a planet **602** such as, for example, earth, having a landmass **602**A and a body of water **602**B. A ground station **604** is positioned on landmass **602**A, wherein the location or position, e.g., the coordinates, of ground station **604** is known. Maritime traffic monitoring system **600** includes an information hub **606** configured for communicating with ground station **604** and one or more location indicator devices **608**. In accordance with an embodiment, maritime traffic monitoring system **600** is a satellite-based radionavigation system such as, for example, a Global Positioning System ("GPS") comprising a plurality of satellites and at least one GPS receiver. In accordance with the embodiment in which maritime traffic monitoring system **600** is a GPS, information hub **606** is a satellite and ground station **604** is a GPS receiver. It should be appreciated that typically GPS uses at least four satellites to compute four unknown quantities, e.g., for determining three position coordinates and a clock deviation from the satellite time. For the sake of clarity, a single satellite **606** is shown.

FIG. **26** illustrates three location indicator devices identified by reference characters **608**A, **608**B, and **608**C, where an alphabetic character has been appended to numeric character **608** to distinguish the different location indicator devices. In the example shown in FIG. **26**, remote location indicator devices **608**A, **608**B, and **608**C are moored buoys that are connected to the ocean floor or ocean bottom by tethers **616**. Exemplary tethers include chains, nylon, buoyant polypropylene, or the like. It should be understood that the number of remote location indicator devices and the types of remote location indicator devices are not limitations of the present invention. Accordingly, there may be fewer than three or more than three remote location indicator devices **608**. Alternatively, remote location indicator devices **608** may include drifting buoys, light houses, coastal ground stations, surface watercraft, sub-surface watercraft, marine vessels, vehicles within range along coastal areas, combinations thereof, or the like. Remote location indicator device **608**A has a short range receiving/long range transmitting antenna **608**AS and a long range receiving and transmitting antenna **608**AL; remote location indicator device **608**B has a short range receiving/long range transmitting antenna **608**BS and a long range receiving and transmitting antenna **608**BL; and remote location indicator device **608**C has a short range receiving/long range transmitting antenna **608**CS and a long range receiving and transmitting antenna **608**CL. Accordingly, short range receiving/transmitting antennas **608**AS, **608**BS, and **608**CS are configured to receive signals from a signal source and transmit signals to a receiver, e.g., receive signals from and transmit a signals to a boat that is within range of antennas **608**AS, **608**BS, and **608**CS of buoys **608**A, **608**B, and **608**C, respectively. Long range receiving/transmitting antennas **608**AL, **608**BL, and **608**CL are configured to receive signals from a signal source and transmit signals to a receiver, e.g., receive signals from a boat in response to the boat being within range of antennas **608**AL, **608**BL, and **608**CL of buoys **608**A, **608**B, and **608**C, respectively. It should be noted that antennas **608**AL, **608**BL, and **608**CL have longer ranges than antennas **608**AS, **608**BS, and **608**CS, respectively. By way of example, the range of antennas **608**AS, **608**BS, and **608**CS is up to approximately 2,000 meters and the range of antennas **608**AL, **608**BL, and **608**CL is 20,000 meters or more. It should be noted that antennas **608**AS, **608**BS, and **608**CS can be configured to have the same receiving range as each other or have different receiving ranges from each other. Antennas **608**AL, **608**BL, and **608**CL can be configured to have the same transmitting range as each other or have different transmitting ranges from each other. The receiving range of an antenna is the distance a signal can travel from a signal source to the antenna and accurately convey the information carried by the signal and the transmitting range of an antenna is the distance a signal can travel from the antenna to a receiver and accurately convey the information carried by the signal.

In accordance with the embodiment shown in FIG. **26**, ground station **604** is configured to determine and validate spatial location in response to data from information hub **606**. By way of example, information hub **606** is a satellite. It should be noted that the type of satellite is not a limitation. The satellite can be a geosynchronous satellite, a geostationary satellite, a communications satellite, a remote sensing satellite, a navigation satellite, a geocentric satellite, a global positioning satellite, a drone satellite, a ground satellite, a polar satellite, a Low Earth Orbit Satellite, ("LEOS"), Mid-Earth Orbit Satellite ("MEOS"), a High Earth Orbit Satellite ("HEOS"), a nanosatellite, or the like. By way of example, information hub **606** is a geostationary satellite. It should be noted that information hub **606** is not limited to being an object in an orbit. Other examples of information hub **606** include an aircraft, a drone, surface watercraft, sub-surface watercraft, a land vehicle, or the like.

FIG. **26** further includes vessels **610** and **612** that are traveling over body of water **602**B. Vessels **610** and **612** may be referred to as vehicles. By way of example vessel **610** is a tugboat and vessel **612** is a cargo ship. In operation, ground station **604** and satellite **606** communicate location information with each other. For example, ground station **604** transmits its location or coordinates to satellite **606** and satellite **606** transmits its location or coordinates to ground station **604**. Moored buoys **608**A, **608**B, and **608**C transmit their locations or coordinates to satellite **606**, which satellite **606** transmits the locations or coordinates of buoys **608**A, **608**B, and **608**C to ground station **604**. Ground station **604** serves as a fixed reference point. Buoys **608**A, **608**B, and

608C receive and transmit signals to satellite 606 through their long range antennas 608AL, 608BL, and 608C1, respectively. Ground station 604 determines the location, position, or coordinates of moored buoys 608A, 608B, and 608C relative to itself.

In accordance with an embodiment, tugboat 610 uses moored buoys 608A and 608B to validate its location by taking a bearing to moored buoy 608A via antenna 608AS, a bearing to buoy 608B via antenna 608BS, and transmitting the bearings to satellite 606 via antennas 608AL and 608BL. Alternatively, cargo ship 612 transmits its coordinate to buoy 608A and 608B, which buoys 608A and 608B transmit the coordinates to satellite 606 via antennas 608AL and 608BL. The bearing can be determined using a phased array antenna or a Multiple-input and Multiple output (MIMO) type antenna. Satellite 606 transmits to ground station 604 the bearing or coordinate from tugboat 610 to buoy 608A. Thus, tugboat 610, which is a type of vehicle or vessel, takes a position fix of itself relative to an object, i.e., moored buoy 608A. Ground station 604 calculates the location of tugboat 610 relative to its location using the bearing or coordinate from tugboat 610 to moored buoy 608A, i.e., ground station 604 establishes a first position of tugboat 610 relative to itself, wherein ground station 604 serves as a reference object. In addition, satellite 606 transmits to ground station 604 the bearing or coordinate from tugboat 610 to buoy 608B. Thus, tugboat 610 takes a position fix of itself relative to moored buoy 608B, which moored buoy 608B serves as another object, i.e., ground station 604 establishes a second position of tugboat 610 to moored buoy 608B. Ground station 604 calculates the location of tugboat 610 relative to its location using the bearing or coordinate from tugboat 610 to buoy 608B. If the location determined using the two bearings indicate that tugboat 610 is in the same location or position within an acceptable margin of error, ground station 604 transmits the location or position of tugboat 610 to satellite 606, which re-transmits the location information to tugboat 610. By way of example, the acceptable margin of error of the locations or positions determined using the bearings is within five percent of each other. Thus, ground station 604 compares the location determined using the bearing or coordinate to buoy 608A with the location determined using the location to buoy 608B to generate a comparison result. Ground station 604 uses the comparison result to confirm or verify the location of tugboat 610. If the comparison result confirms the location or position of tugboat 610, ground station 604 sends the location or position and, optionally a validation signal to satellite 606. Satellite 606 re-transmits the location or position and the location validation signal to tugboat 610. Thus, the position fixes are used to verify the location of tugboat 610.

Cargo ship 612 uses moored buoys 608B and 608C to validate its location by taking a bearing to buoy 608B via antenna 608BS, a bearing to buoy 608C via antenna 608CS, and transmitting the bearings to satellite 606 via antennas 608AL and 608BL. Alternatively, cargo ship 612 transmits its coordinate to buoy 608B and 608C. Satellite 606 transmits the bearing or coordinate to ground station 604, which calculates the location of cargo ship 612 relative to ground station 604 using the bearing or coordinate from cargo ship 612 to moored buoy 608B. In addition, satellite 606 transmits the location of cargo ship 612 relative to ground station 604 using the signal strength of the bearing or coordinate from cargo ship 612 to moored buoy 608C. If the location determined using the two bearings or coordinates indicates cargo ship 612 is in the same location within an acceptable margin of error, e.g., five percent, ground station 604 transmits the location to satellite 606, which satellite 606 re-transmits the location to cargo ship 612. Thus, ground station 604 compares the location determined using the received signal strength of the bearing or coordinate from cargo ship 612 to buoy 608C with the received signal strength of the location determined using the bearing or coordinate from cargo ship 612 to buoy 608B to generate a comparison result. Ground station 604 uses the signal strength comparison result to confirm or verify the location of cargo ship 612. If the comparison result confirms the location or position of cargo ship 612, ground station 604 sends the location or position and, optionally, a validation signal to satellite 606. Satellite 606 transmits the location or position and the location validation signal to cargo ship 612. Thus, the position fixes are used to verify the location of cargo ship 612.

It should be noted that the validated location can also be transmitted to other locations or entities. In addition, the mismatch or the inability to validate the location of a vessel can be used to trigger an alarm that may be sent to other locations or entities to provide notice that there is some type of anomaly at a particular location so that the locations or entities can be aware of a potential danger.

FIG. 27 is a view of maritime traffic monitoring system 600 in accordance with another embodiment of the present invention. In accordance with this embodiment, maritime traffic monitoring system 600 is configured in an alternative method of use of system 600. Cargo ship 612 uses one or more of moored buoys 608A, 608B, and 608C to validate its location. In an example in which maritime traffic monitoring system 600 uses a single buoy, 608C, for location validation, cargo ship 612 transmits an electromagnetic wave that may be, for example, a radio wave to continuously take a bearing to buoy 608C via antenna 608CL. Alternatively, cargo ship 612 continuously transmits its coordinate to buoy 608C. The bearing or coordinate is received by antenna 608CL and transmitted to satellite 606 via antenna 608CL. Satellite 606 transmits the bearing or coordinate to ground station 604.

It should be noted that antenna 608CL is configured to receive electromagnetic waves that are transmitted from a greater distance than antenna 608CS is configured to receive. Thus, antenna 608CL is capable of receiving the electromagnetic waves or signals from cargo ship 612 when it is further away from buoy 608C than antenna 608CS is capable of receiving. As cargo ship 612 gets into range of antenna 608CS of buoy 608C, antennas 608CL and 608CS receive signals from cargo ship 612. The signals transmitted from cargo ship 612 to antennas 608CL and 608CS serve as a broadcast location for cargo ship 612. Antennas 608CL and 608CS transmit the broadcast signals to, for example, satellite 606, which re-transmits the broadcast signals to ground station 604. In response to receiving the broadcast signals, ground station 604 compares the signal from antenna 608CL with the signal from antenna 608CS. The comparison result indicates whether both antennas 608CL and 608CS are transmitting signals in response to a broadcast signal from cargo ship 612 or whether a single antenna 608CL is transmitting a signal in response to the broadcast signal from cargo ship 612. Receipt of signals from both transmitters 608CS and 608CL indicates that cargo ship 612 is near buoy 608C. In response to receiving signal from both antennas 608CS and 608CL, ground station 604 transmits a location validation signal to cargo ship 612 via satellite 206, thereby confirming the location of cargo ship 612.

FIG. 28 is a view of maritime traffic monitoring system 625 in accordance with another embodiment of the present invention. Maritime traffic monitoring system 625 is similar

to maritime traffic monitoring system **600**, except that buoy **608**A has a single long range receiving/long range transmitting antenna **608**AL and buoy **608**B has a single short range receiving/long range transmitting antenna **608**BS. Long range receiving/long range transmitting antenna **608**AL is configured for receiving electromagnetic radiation that originates from a point that is further away from buoys **608**A and **608**B than short range receiving/long range transmitting antenna **608**BS is configured to receive. Long range receiving/long range transmitting antennas **608**AL and **608**BS are configured to be able to send signals to satellite **606** and to cargo ship **612**. Buoys **608**A and **608**B are placed close enough together so that the position or location of cargo ship **612** can be verified with a long range receiving/long range transmitting antenna **608**AL mounted to buoy **608**A and a short range receiving/long range transmitting antenna **608**BS mounted to buoy **608**B.

In operation, cargo ship **612** transmits an electromagnetic wave that may be, for example, a radio wave that contains the bearing of cargo ship **612** to long range receiving/long range transmitting antenna **608**AL. Alternatively, cargo ship **612** transmits its coordinate to long range receiving/short range transmitting antenna **608**AL. It should be appreciated that long range receiving/long range transmitting antenna **608**AL is configured to receive electromagnetic waves that are transmitted from a greater distance than short range receiving/long range transmitting antenna **608**BS is configured to receive. Thus, antenna **608**AL is capable of receiving the electromagnetic wave from cargo ship **612** that is further away from buoys **608**A and **608**B than can short range receiving/transmitting antenna **608**B. Accordingly, cargo ship **612** takes a bearing to buoys **608**AL and transmits the bearing to buoy **608**A via long range receiving/long range transmitting antenna **608**AL. Alternatively, cargo ship **612** transmits its coordinate to long range receiving/long range transmitting antenna **608**AL. As cargo ship **612** gets into range of long range receiving/long range transmitting antenna **608**AL of buoy **608**A, long range receiving/long range transmitting antenna **608**AL receives the signal containing the bearing or the signal containing the coordinate of cargo ship **612**. It should be appreciated that short range receiving/long range transmitting antenna **608**BS does not receive the signal because the electromagnetic wave or signal from cargo ship **612** is too attenuated to be recognized by short range receiving/long range transmitting antenna **608**BS. The signal transmitted from cargo ship **612** to long range receiving/long range transmitting antenna **608**AL and short range receiving/long range transmitting antenna **608**BS serve as a broadcast location for cargo ship **612**. As cargo ship **612** gets into range of short range receiving/long range transmitting antenna **608**BS of buoy **608**A, long range receiving/long range transmitting antenna **608**AL and short range receiving/long range transmitting antenna **608**BS receive signals from cargo ship **612**. The signal transmitted from cargo ship **612** to antennas **608**AL and **608**BS serve as a broadcast location for cargo ship **612**. Antennas **608**AL and **608**BS transmit signals to, for example, satellite **606**, which re-transmits the signal to ground station **604**. In response to receiving the broadcast signal, ground station **604** compares the signal from long range receiving/long range transmitting antenna **608**AL with the signal from short range receiving/long range transmitting antenna **608**BS. The comparison result indicates whether both antennas **608**AL and **608**BS are transmitting signals in response to a broadcast signal from cargo ship **612** or whether the single long range receiving/long range transmitting antenna **608**AL is transmitting a signal in response to the broadcast signal from cargo ship **612**. Receipt of signals from both transmitters **608**AL and **608**BS indicates that cargo ship is near buoy **608**B. In response to receiving signal from both antennas **608**AL and **608**BS, ground station **604** transmits a location validation signal to cargo ship **612** via satellite **606**, thereby confirming the location of cargo ship **612**.

FIG. **29** is a view of a maritime traffic monitoring system **650** in accordance with another embodiment of the present invention. Traffic monitoring system **650** is similar to traffic monitoring system **600** except that the remote location indicator devices are drifting buoys **658**. In the embodiment of FIG. **29**, drifting buoys are identified by reference characters **658**A, **658**B, and **658**C. It should be understood that the number of remote location indicator devices and the types of remote location indicator devices are not limitations of the present invention. Accordingly, there may be fewer than three or more than three remote location indicator devices **658**.

In operation, ground station **604** and satellite **606** communicate location information with each other. For example, ground station **604** transmits its location or coordinates to satellite **606** and satellite **606** transmits its location or coordinates to ground station **604**. Drifting buoys **658**A, **658**B, and **658**C transmit their locations or coordinates to satellite **606**, which transmits the locations or coordinates of buoys **658**A, **658**B, and **658**C to ground station **604**. Ground station **604** serves as a fixed reference point. Ground station **604** determines the location or coordinates of drifting buoys **658**A, **658**B, and **658**C relative to itself.

Remote location indicator device **658**A has a short range receiving/long range transmitting antenna **658**AS and a long range receiving/long range transmitting antenna **658**AL; remote location indicator device **658**B has a short range receiving/long range transmitting antenna **658**BS and a long range receiving/long range transmitting antenna **658**BL; and remote location indicator device **658**C has a short range receiving/long range transmitting antenna **658**CS and a long range receiving/long range transmitting antenna **658**CL. Accordingly, short range receiving/long range transmitting antenna **658**AS is configured to receive and transmit a signal from a signal source, e.g., a boat, in response to the boat being close to buoy **658**A, i.e., within a distance of approximately 2,000 meters. Long range receiving/long range transmitting antenna **658**AL is configured to receive a signal from a signal source, e.g., a boat in response to the boat being further from buoy **658**A, i.e., from a distance 20,000 meters or more from buoy **658**A. Short range receiving/long range transmitting antenna **658**BS is configured to receive and transmit a signal from a signal source, e.g., a boat, in response to the boat being close to buoy **658**B, i.e., within a distance of approximately 2,000 meters. Long range receiving/transmitting antenna **658**BL is configured to receive a signal from a signal source, e.g., a boat in response to the boat being further from buoy **658**B, i.e., from a distance of 20,000 meters or more from buoy **658**B. Short range receiving/long range transmitting antenna **658**CS is configured to receive and transmit a signal from a signal source, e.g., a boat, in response to the boat being close to buoy **658**C, i.e., within a distance of approximately 2,000 meters. Long range receiving/long range transmitting antenna **658**CL is configured to receive a signal from a signal source, e.g., a boat in response to the boat being further from buoy **658**C, i.e., from a distance of 20,000 meters or more from buoy **658**C. It should be noted that the antennas of buoys **658**A, **658**B, and **658**C can be configured to receive signals from the same distance or from different distances and transmit signals the same distance or different

distances, i.e., the ranges of the antennas of buoys **658**A, **658**B, and **658**C can be the same as each other or they can be different from each other.

Tugboat **610** uses drifting buoys **658**A and **658**B to validate its location by taking a bearing to moored buoy **658**A, a bearing to buoy **658**B, and transmitting the bearings to satellite **606**. Alternatively, tugboat **610** can send its coordinate to buoys **658**A and **658**B, which buoys transmit the coordinate to satellite **606**. Satellite **606** transmits to ground station **604** the bearing from tugboat **610** to buoy **658**A or the coordinate of tugboat **610**. Ground station **604** calculates the location of tugboat **610** relative to its location using the bearing from tugboat **610** to drifting buoy **658**A or the coordinate of tugboat **610**. In addition, satellite **606** transmits to ground station **604** the bearing from tugboat **610** to buoy **658**B or the coordinate of tugboat **610**. Ground station **604** calculates the location of tugboat **610** relative to its location using the bearing from tugboat **610** to drifting buoy **658**B or from the coordinate of tugboat **610**. If the location determined using the two bearings or the coordinate of tugboat **610** indicates that tugboat **610** is in the same location or position within an acceptable margin of error, e.g., five percent, ground station **604** transmits the location or position of tugboat **610** to satellite **606**. Thus, ground station **604** compares the location determined using the bearing to buoy **658**A or the coordinate of tugboat **610** with the location determined using the location to buoy **658**B to generate a comparison result. Ground station **604** uses the comparison result to confirm or verify the location of tugboat **610**. If the comparison result confirms the location or position of tugboat **610**, ground station **604** transmits the location or position and, optionally a validation signal to satellite **606**. Satellite **606** transmits the location or position and the location validation signal to tugboat **610**.

Cargo ship **612** uses drifting buoys **658**B and **658**C to validate its location by taking a bearing to buoy **658**B, a bearing to drifting buoy **658**C, and transmitting the bearings to satellite **606**. Alternatively, cargo ship **612** can send its coordinate to buoys **658**B and **658**C, which buoys transmit the coordinate to satellite **606**. Satellite **606** transmits the bearing to ground station **604** or the coordinate of cargo ship **612**, which calculates the location of cargo ship **612** relative to ground station **604** using the bearing from cargo ship **612** to drifting buoy **658**B or the coordinate of cargo ship **612**. In addition, satellite **606** transmits the location of cargo ship **612** relative to ground station **604** using the bearing from cargo ship **612** to drifting buoy **658**C or the coordinate of cargo ship **612**. If the location determined using the two bearings or the coordinate of cargo ship **612** indicate cargo ship **612** is in the same location within an acceptable margin of error, e.g., five percent, ground station **604** transmits the location to satellite **606**. Thus, ground station **604** compares the location determined using the bearing from cargo ship **612** to buoy **658**A with the location determined using the bearing from cargo ship **612** to buoy **658**B to generate a comparison result. Alternatively, ground station **604** compares the location determined using the coordinate of cargo ship **612** to buoy **658**A with the location determined using the coordinate to cargo ship **612** to generate a comparison result. Ground station **604** uses the comparison result to confirm or verify the location of cargo ship **612**. If the comparison result confirms the location or position of cargo ship **612**, ground station **604** transmits the location or position and, optionally, a validation signal to satellite **606**. Satellite **606** transmits the location or position and the location validation signal to cargo ship **612**.

It should be noted that the methods described with reference to FIGS. **27** and **28** can be used with the floating buoy configuration described with reference to FIG. **29**.

FIG. **30** is a view of a maritime traffic monitoring system **660** in accordance with another embodiment of the present invention. Traffic monitoring system **660** is similar to traffic monitoring system **600** except that the remote location indicator devices **668** are a combination of drifting buoys and moored buoys. In the embodiment of FIG. **30**, the moored buoys are identified by reference characters **668**A and **668**B and the drifting buoy is identified by reference character **668**C. It should be noted that unlike moored buoys **668**A and **668**B, drifting buoy **668**C is not tethered to the ocean floor by a tether **616**. As discussed above, the number of buoys and the types of buoys, i.e., moored, floating, etc. are not limitations of the present invention. Tugboat **610** uses moored buoy **668**B and drifting buoy **668**C to validate its location by taking a bearing to moored buoy **668**B, a bearing to drifting buoy **668**C, and transmitting the bearings to satellite **606**. Alternatively, tugboat **610** also receives the signal strength of the transmission from buoys **668**B and **668**C, and buoys **668**B and **668**C transmit the coordinate from the vessel, i.e., tugboat **610**. Satellite **606** transmits to ground station **604** the bearing from tugboat **610** to drifting buoy **668**C or the coordinate from tugboat **610**. Ground station **604** calculates the location of tugboat **610** relative to its location using the bearing from tugboat **610** to drifting buoy **668**C or ground station **604** calculates the location of tugboat **610** relative to its location using the coordinate of tugboat **610**. In addition, satellite **606** transmits to ground station **604** the bearing from tugboat **610** to moored buoy **668**B or the coordinate of tugboat **610**. Ground station **604** calculates the location of tugboat **610** relative to its location using the bearing from tugboat **610** to moored buoy **668**B or ground station **604** calculates the location of tugboat **610** relative to its location using the coordinate of tugboat **610**. If the location determined using the two bearings or the coordinates indicate that tugboat **610** is in the same location or position within an acceptable margin of error, e.g., five percent, ground station **604** transmits the location or position of tugboat **610** to satellite **606**. Thus, ground station **604** compares the location determined using the bearing to buoy **668**A or the coordinate of tugboat **610** with the location determined using the location to buoy **668**B to generate a comparison result. Ground station **604** uses the comparison result to confirm or verify the location of tugboat **610**. If the comparison result confirms the location or position of tugboat **610**, ground station **604** transmits the location or position and, optionally, a validation signal to satellite **606**. Satellite **606** transmits the location or position and the location validation signal to tugboat **610**. Thus, ground station **604** uses comparative analytics to validate the location of tugboat **610**.

Cargo ship **612** uses moored buoys **668**A and **668**B to validate its location as described with reference to FIG. **29** using two sets of bearing data or the coordinates of cargo ship **612** to validate the location or position of cargo ship **612**. Thus, ground station **604** uses comparative analytics to validate the location of cargo **612**.

FIG. **31** is a view of a maritime traffic monitoring system **670** in accordance with another embodiment of the present invention. Traffic monitoring system **670** is similar to traffic monitoring system **600** except that the remote location indicator devices are light houses **678**. In the embodiment of FIG. **31**, individual light houses are identified by reference characters **678**A, **678**B, and **678**C. Remote location indicator device **678**A has a short range receiving/long range

transmitting antenna **678**AS and a long range receiving/long range transmitting antenna **678**AL; remote location indicator device **678**B has a short range receiving/long range transmitting antenna **678**BS and a long range receiving/long range transmitting antenna **678**BL; and remote location indicator device **678**C has a short range receiving/long range transmitting antenna **678**CS and a long range receiving/long range transmitting antenna **678**CL. Accordingly, short range receiving/long range transmitting antenna **678**AS is configured to receive and transmit a signal from a signal source, e.g., a boat, in response to the boat being close to buoy **678**A, i.e., within a distance of approximately 2,000 meters. Long range receiving/long range transmitting antenna **678**AL is configured to receive a signal from a signal source, e.g., a boat in response to the boat being further from buoy **678**A, i.e., from a distance of 20,000 meters or more from buoy **678**A. Short range receiving/long range transmitting antenna **678**BS is configured to receive and transmit a signal from a signal source, e.g., a boat, in response to the boat being close to buoy **678**B, i.e., within a distance of approximately 2,000 meters. Long range receiving/long range transmitting antenna **678**BL is configured to receive a signal from a signal source, e.g., a boat in response to the boat being further from buoy **678**B, i.e., from a distance of 20,000 meters or more from buoy **678**B. Short range receiving/long range transmitting antenna **678**CS is configured to receive and transmit a signal from a signal source, e.g., a boat, in response to the boat being close to buoy **678**C, i.e., within a distance of approximately 2,000 meters. Long range receiving/long range transmitting antenna **678**CL is configured to receive a signal from a signal source, e.g., a boat in response to the boat being further from buoy **678**C, i.e., from a distance of 20,000 meters or more from buoy **678**C. It should be noted that antennas **678**A, **678**B, and **678**C can be configured to receive signals from the same distance or from different distances and transmit signals the same distance or different distances, i.e., the ranges of the antennas of buoys **678**A, **678**B, and **678**C can be the same as each other or they can be different from each other.

In operation, ground station **604** and satellite **606** communicate location information with each other. For example, ground station **604** transmits its location or coordinates to satellite **606** and satellite **606** transmits its location or coordinates to ground station **604**. Light houses **678**A, **678**B, and **678**C transmit their locations to satellite **606**, which transmits their locations to ground station **604**, which serves as a fixed reference point. Ground station **604** determines the location or coordinates of light houses **678**A, **678**B, and **678**C relative to ground station **604**.

Tugboat **610** uses light houses **678**A and **678**B to validate its location by taking a bearing to light house **678**A, a bearing to light house **678**B, and transmitting the bearings to satellite **606**. Alternatively, tugboat **610** can send its coordinate to buoys **678**A and **678**B, which buoys transmit the coordinate to satellite **606**. Satellite **606** transmits to ground station **604** the bearing from tugboat **610** to light house **678**A or the coordinate of tugboat **610** to light house **678**A. Ground station **604** calculates the location of tugboat **610** relative to its location using the bearing from tugboat **610** to light house **678**A. In addition, satellite **606** transmits to ground station **604** the bearing from tugboat **610** to light house **678**B. Ground station **604** calculates the location of tugboat **610** relative to its location using the bearing from tugboat **610** to light house **678**B. Alternatively, ground station **604** calculates the location of tugboat **610** relative to light house **678**A using the coordinate of tugboat **610**, where ground station **604** calculates the location of tugboat **610** relative to light house **678**B using the coordinate of tugboat **610**. If the location determined using the two bearings or the coordinates of tugboat **610** indicate that tugboat **610** is in the same location or position within an acceptable margin of error, e.g., five percent, ground station **604** transmits the location or position of tugboat **610** to satellite **606**. Thus, ground station **604** compares the location determined using the bearing to light house **678**A with the location determined using the location to light house **678**B to generate a comparison result. Alternatively, ground station **604** generates a comparison result by comparing the calculation of the location of tugboat **610** relative to light house **678**A and the location of tugboat **610** relative to light house **678**B. Ground station **604** uses the comparison result to confirm or verify the location of tugboat **610**. If the comparison result confirms the location or position of tugboat **610**, ground station **604** transmits the location or position and, optionally, a validation signal to satellite **606**. Satellite **606** transmits the location or position and the location validation signal to tugboat **610**.

Cargo ship **612** uses light houses **678**B and **678**C to validate its location by taking a bearing to buoy **678**B, a bearing to buoy **678**C, and transmitting the bearings to satellite **606**. Alternatively, cargo ship **612** can send its coordinate to buoys **678**B and **678**C, which buoys transmit the coordinate to satellite **606**. Satellite **606** transmits the bearing or the coordinate to ground station **604**, which calculates the location of cargo ship **612** relative to ground station **604** using the bearing from cargo ship **612** to light house **678**B. In addition, satellite **606** transmits the location of cargo ship **612** relative to ground station **604** using the bearing from cargo ship **612** to light house **678**C. Alternatively, ground station **604** generates a comparison result by comparing the calculation of the location of cargo ship **612** relative to light house **678**B and the location of cargo ship **612** relative to light house **678**C. If the location determined using the two bearings or the location using the coordinates indicates that cargo ship **612** is in the same location within an acceptable margin of error, e.g., five percent, ground station **604** transmits the location to satellite **606**. Thus, ground station **604** compares the location determined using the bearing from cargo ship **612** to light house **678**B with the location determined using the bearing from cargo ship **612** to light house **678**C to generate a comparison result. Alternatively, ground station **604** compares the location determined using the coordinate of cargo ship **612** and the location of light house **678**B with the location using the coordinate of light house **678**C to generate the comparison result. Ground station **604** uses the comparison result to confirm or verify the location of cargo ship **612**. If the comparison result confirms the location or position of cargo ship **612**, ground station **604** sends the location or position and, optionally, a validation signal to satellite **606**. Satellite **606** transmits the location or position and the location validation signal to cargo ship **612**.

FIG. **32** is a view of a maritime traffic monitoring system **680** in accordance with another embodiment of the present invention. Maritime traffic monitoring system **680** is similar to traffic monitoring system **600** except that the remote location indicator devices are ground stations **688**. In the embodiment of FIG. **32**, the ground stations are identified by reference characters **688**A, **688**B, and **688**C. Remote location indicator device **688**A has a short range receiving/long range transmitting antenna **688**AS and a long range receiving/long range transmitting antenna **688**AL; remote location indicator device **688**B has a short range receiving/long range transmitting antenna **688**BS and a long range receiving/long

range transmitting antenna **688**BL; and remote location indicator device **688**C has a short range receiving/long range transmitting antenna **688**CS and a long range receiving/long range transmitting antenna **688**CL. Accordingly, short range receiving/long range transmitting antenna **688**AS is configured to receive and transmit a signal from a signal source, e.g., a boat, in response to the boat being close to ground station **688**A, i.e., within a distance of approximately 2,000 meters. Long range receiving/long range transmitting antenna **688**AL is configured to receive a signal from a signal source, e.g., a boat in response to the boat being further from light house **688**A, i.e., from a distance of 20,000 meters or more from light house **688**A. Short range receiving/long range transmitting antenna **688**BS is configured to receive and transmit a signal from a signal source, e.g., a boat, in response to the boat being close to light house **688**B, i.e., within a distance of approximately 2,000 meters. Long range receiving/long range transmitting antenna **688**BL is configured to receive a signal from a signal source, e.g., a boat in response to the boat being further from light house **688**B, i.e., from a distance up of 20,000 meters or more from light house **688**B. Short range receiving/long range transmitting antenna **688**CS is configured to receive and transmit a signal from a signal source, e.g., a boat, in response to the boat being close to light house **688**C, i.e., within a distance of approximately 2,000 meters. Long range receiving/long range transmitting antenna **688**CL is configured to receive a signal from a signal source, e.g., a boat in response to the boat being further from light house **688**C, i.e., from a distance up of 20,000 meters or more from light house **688**C. It should be noted that antennas **688**AS, **688**BS, and **688**CS can be configured to have the same receiving range as each other or have different receiving ranges from each other. Antennas **688**AL, **688**BL, and **688**CL can be configured to have the same transmitting range as each other or have different transmitting ranges from each other.

In operation, ground station **604** and satellite **606** communicate location information with each other. For example, ground station **604** transmits its location or coordinates to satellite **606** and satellite **606** transmits its location or coordinates to ground station **604**. Ground stations **688**A, **688**B, and **688**C transmit their locations or coordinates to satellite **606**, which transmits the locations or coordinates of ground stations **688**A, **688**B, and **688**C to ground station **604**. Ground station **604** serves as a fixed reference point. Ground station **604** determines the location or coordinates of ground stations **688**A, **688**B, and **688**C relative to itself.

Tugboat **610** uses ground stations **688**A and **688**B to validate its location by taking a bearing to ground station **688**A, a bearing to ground station **688**B, and transmitting the bearings to satellite **606**. Satellite **606** transmits to ground station **604** the bearing from tugboat **610** to ground station **688**A. Ground station **604** calculates the location of tugboat **610** relative to its location using the bearing from tugboat **610** to ground station **688**A. In addition, satellite **606** transmits to ground station **604** the bearing from tugboat **610** to ground station **688**B. Ground station **604** calculates the location of tugboat **610** relative to its location using the bearing from tugboat **610** to ground station **688**B. If the location determined using the two bearings indicate that tugboat **610** is in the same location or position within an acceptable margin of error, e.g., five percent, ground station **604** transmits the location or position of tugboat **610** to satellite **606**. Thus, ground station **604** compares the location determined using the bearing to ground station **688**A with the location determined using the location to ground station **688**B to generate a comparison result. Ground station **604** uses the comparison result to confirm or verify the location of tugboat **610**. If the comparison result confirms the location or position of tugboat **610**, ground station **604** transmits the location or position and, optionally, a validation signal to satellite **606**. Satellite **606** transmits the location or position and the location validation signal to tugboat **610**.

Cargo ship **612** uses ground stations **688**B and **688**C to validate its location by taking a bearing to ground station **688**B, a bearing to ground station **688**C, and transmitting the bearings to satellite **606**. Satellite **606** transmits the bearings to ground station **604**, which calculates the location of cargo ship **612** relative to ground station **604** using the bearing from cargo ship **612** to ground station **688**B. In addition, satellite **606** transmits the location of cargo ship **612** relative to ground station **604** using the bearing from cargo ship **612** to ground station **688**C. If the location determined using the two bearings indicate cargo ship **612** is the same location within an acceptable margin of error, e.g., five percent, ground station **604** transmits the location to satellite **606**. Thus, ground station **604** compares the location determined using the bearing from cargo ship **612** to ground station **688**A with the location determined using the bearing from cargo ship **612** to ground station **688**B to generate a comparison result. Ground station **604** uses the comparison result to confirm or verify the location of cargo ship **612**. If the comparison result confirms the location or position of cargo ship **612**, ground station **604** transmits the location or position and, optionally, a validation signal to satellite **606**. Satellite **606** transmits the location or position and the location validation signal to cargo ship **612**.

FIG. **33** is a view of a maritime traffic monitoring system **700** in accordance with another embodiment of the present invention. Maritime traffic monitoring system **700** is similar to traffic monitoring system **600** except that information hub **606** is absent from maritime traffic monitoring system **700** and location indicator devices **608**A, **608**B, and **608**C communicate directly with ground station **604**. In accordance with the embodiment shown in FIG. **33**, ground station **604** is configured to determine spatial location in response to data buoys **608**A, **608**B, and **608**C.

FIG. **33** further includes vessels **610** and **612** that are traveling over body of water **602**B. Vessels **610** and **612** may be referred to as marine vessels or vehicles. By way of example vessel **610** is a tugboat and vessel **612** is a cargo ship. In operation, ground station **604** transmits its location or coordinates to buoys **608**A, **608**B, and **608**C, and buoys **608**A, **608**B, and **608**C transmit their locations or coordinates to ground station **604**. Ground station **604** serves as a fixed reference point. Buoys **608**A, **608**B, and **608**C receive and transmit signals to ground station **604** through their long range antennas **608**AL, **608**BL, and **608**CL, respectively. Ground station **604** determines the location, position, or coordinates of moored buoys **608**A, **608**B, and **608**C relative to itself.

In accordance with an embodiment, tugboat **610** uses moored buoys **608**A and **608**B to validate its location by taking a bearing to moored buoy **608**A via antenna **608**AS, a bearing to moored buoy **608**B via antenna **608**BS, and transmitting the bearings to moored buoys **608**A and **608**B. Tugboat **610** also transmits its coordinate to buoys **608**A and **608**B. Buoys **608**A and **608**B transmit the bearings and the coordinate of tugboat **610** to ground station **604** via antennas **608**AL and **608**BL. Thus, tugboat **610**, which is a type of vehicle or vessel, takes a position fix of itself relative to an object, i.e., moored buoy **608**A. Ground station **604** calculates the location of tugboat **610** relative to its location using the its coordinate and the bearing from tugboat **610** to

moored buoy **608**A, i.e., ground station **604** establishes a first position of tugboat **610** relative to itself, wherein ground station **604** serves as a reference object. In addition, ground station **604** calculates the location of tugboat **610** relative to its location using the its coordinate and the bearing from tugboat **610** to moored buoy **608**B, i.e., ground station **604** establishes a second position of tugboat **610** relative to itself, wherein ground station **604** serves as another reference object. Ground station **604** calculates the location of tugboat **610** relative to its location using the bearing from tugboat **610** to buoy **608**B. If the location determined using the two bearings indicate that tugboat **610** is in the same location or position within an acceptable margin of error, ground station **604** transmits the location or position of tugboat **610** to tugboat **610**. By way of example, the acceptable margin of error of the locations or positions determined using the bearings is within five percent of each other. Thus, ground station **604** compares the location determined using the bearing to buoy **608**A with the location determined using the location to buoy **608**B to generate a comparison result. Ground station **604** uses the comparison result to confirm or verify the location of tugboat **610**. If the comparison result confirms the location or position of tugboat **610**, ground station **604** sends the location or position and, optionally, a validation signal to tugboat **610**. Thus, the position fixes are used to verify the location of tugboat **610**.

Cargo ship **612** uses moored buoys **608**B and **608**C to validate its location by taking a bearing to buoy **608**B via antenna **608**BS, a bearing to buoy **608**C via antenna **608**CS, and transmitting the bearings to ground station **604**, which calculates the location of cargo ship **612** relative to ground station **604** using the bearing from cargo ship **612** to moored buoy **608**B. In addition, moored buoy **608**C transmits the location of cargo ship **612** relative to ground station **604** using the bearing from cargo ship **612** to moored buoy **608**C. If the location determined using the two bearings indicates cargo ship **612** is in the same location within an acceptable margin of error, e.g., five percent, ground station **604** transmits the location to satellite **606**, which re-transmits the location to cargo ship **612**. Thus, ground station **604** compares the location determined using the bearing from cargo ship **612** to buoy **608**C with the location determined using the bearing from cargo ship **612** to buoy **608**B to generate a comparison result. Ground station **604** uses the comparison result to confirm or verify the location of cargo ship **612**. If the comparison result confirms the location or position of cargo ship **612**, ground station **604** sends the location or position and, optionally, a validation signal to cargo ship **612**. Thus, the position fixes are used to verify the location of cargo ship **612**.

By now it should be appreciated that a method and structure have been provided to securely deliver digital certificates to a vehicle in conjunction with location validation of the entity to which a certificate is being delivered. In accordance with embodiments, a near field antenna or an inductive loop communicate with a traffic control system to deliver the digital certificates. To increase security, the communication can be encrypted using quantum encryption techniques, blockchain techniques, a combination of quantum encryption techniques and blockchain techniques, or the like. The method and structure include using multi-way authentication techniques to ensure the vehicle is correctly located, positioned, and identified. The multi-way authentication techniques can include location validation, facial recognition, gesture recognition, signal recognition, use of comparative analytics for a cell phone associated with the vehicle or other elements associated with the vehicle, etc.

It should be further understood that the techniques for providing digital certificates applies to fixed or mobile applications, to maritime applications, aviation applications, vehicular traffic applications, space traffic application, or the like.

Although specific embodiments have been disclosed herein, it is not intended that the invention be limited to the disclosed embodiments. Those skilled in the art will recognize that modifications and variations can be made without departing from the spirit of the invention. It is intended that the invention encompass all such modifications and variations as fall within the scope of the appended claims.

What is claimed is:

1. A location validation system, comprising:

a vehicle detection device, wherein the vehicle detection devices is positioned at a desired corner of an intersection of a roadway, the vehicle detection devices monitoring the desired corner and transmits data to the traffic control unit on a current occupancy status at the desired corner being monitored by the vehicle detection device;

a vehicle location indicator device, wherein the vehicle location indicator devices monitors the desired corner and transmits data to the traffic control unit of a current occupancy status at the desired corner being monitored by the vehicle location indicator device; and

a data aggregator located in the traffic control unit, the data aggregator receiving and comparing the data from the vehicle detection device and the data from the vehicle location indicator device, the data aggregator generating an error signal when the data from the vehicle detection device and the data from the vehicle location device indicator mismatches and indicates a presence of a vehicle in the desire corner when the data from the vehicle detection device and the data from the vehicle location device indicator matches.

2. The location validation system of claim **1**, wherein the vehicle detection device is an inductive loop formed in a roadway of the predefined location.

3. The location validation system of claim **1**, wherein the vehicle detection device is a geofence outlining the predefined location.

4. The location validation system of claim **1**, wherein the vehicle detection device is a video camera monitoring the predefined location.

5. The location validation system of claim **1**, comprising a Pedestrian-to-Infrastructure in communication with the traffic control unit indicating a presence of a pedestrian in the predefined location.

6. The location validation system of claim **5**, comprising a cellular phone in communication with the Pedestrian-to-Infrastructure.

7. A location validation system, comprising:

a plurality of vehicle detection devices, wherein each of the plurality of vehicle detection devices is positioned at different corners of an intersection of a roadway, each of the plurality of vehicle detection devices monitoring a corresponding corner and transmits data to the traffic control unit on a current occupancy status at the corresponding corner being monitored;

a plurality of vehicle location indicator devices, wherein each of the plurality of vehicle location indicator devices is associated with a corresponding vehicle detection device and monitors the corresponding corner of the corresponding vehicle detection device and

transmits data to the traffic control unit of a current occupancy status at the corresponding corner being monitored; and

a data aggregator located in the traffic control unit, the data aggregator receiving and comparing the data from each of the plurality of vehicle detection device and data from each of the plurality of vehicle location indicator device, the data aggregator generating an error signal when data from a corresponding vehicle detection device and a corresponding vehicle location device indicator mismatches and indicates a presence of a vehicle when the data from the corresponding vehicle detection device and the corresponding vehicle location device indicator matches.

* * * * *