(12) INTERNATIONAL APPLICATION PUBLISHED UNDER THE PATENT COOPERATION TREATY (PCT)

(19) World Intellectual Property Organization
International Bureau

(43) International Publication Date
27 June 2019 (27.06.2019)

WIPO | PCT

(10) International Publication Number
WO 2019/119119 A1

(51) International Patent Classification:
G01F 15/06 (2006.01) *G01F 1/05* (2006.01)
B64D 25/00 (2006.01) *G01F 1/34* (2006.01)
B64F 5/60 (2017.01) *G01L 19/04* (2006.01)
F17C 13/02 (2006.01)

(21) International Application Number:
PCT/CA2018/051610

(22) International Filing Date:
17 December 2018 (17.12.2018)

(25) Filing Language: English

(26) Publication Language: English

(30) Priority Data:
62/608,186 20 December 2017 (20.12.2017) US

(71) Applicant: **BOMBARDIER INC.** [CA/CA]; 400 Côte Vertu Road West, Dorval, Québec H4S 1Y9 (CA).

(72) Inventor: **FIGUEIREDO, Erol**; 112 rue Sandra, Dollard-Des-Ormeaux, Québec H9A 1L6 (CA).

(74) Agent: **NORTON ROSE FULBRIGHT CANADA LLP / S.E.N.C.R.L.**; Suite 2500, 1 Place Ville Marie, Montreal, Québec H3B 1R1 (CA).

(81) Designated States *(unless otherwise indicated, for every kind of national protection available)*: AE, AG, AL, AM, AO, AT, AU, AZ, BA, BB, BG, BH, BN, BR, BW, BY, BZ, CA, CH, CL, CN, CO, CR, CU, CZ, DE, DJ, DK, DM, DO, DZ, EC, EE, EG, ES, FI, GB, GD, GE, GH, GM, GT, HN, HR, HU, ID, IL, IN, IR, IS, JO, JP, KE, KG, KH, KN, KP, KR, KW, KZ, LA, LC, LK, LR, LS, LU, LY, MA, MD, ME, MG, MK, MN, MW, MX, MY, MZ, NA, NG, NI, NO, NZ, OM, PA, PE, PG, PH, PL, PT, QA, RO, RS, RU, RW, SA, SC, SD, SE, SG, SK, SL, SM, ST, SV, SY, TH, TJ, TM, TN, TR, TT, TZ, UA, UG, US, UZ, VC, VN, ZA, ZM, ZW.

(84) Designated States *(unless otherwise indicated, for every kind of regional protection available)*: ARIPO (BW, GH, GM, KE, LR, LS, MW, MZ, NA, RW, SD, SL, ST, SZ, TZ, UG, ZM, ZW), Eurasian (AM, AZ, BY, KG, KZ, RU, TJ, TM), European (AL, AT, BE, BG, CH, CY, CZ, DE, DK, EE, ES, FI, FR, GB, GR, HR, HU, IE, IS, IT, LT, LU, LV,

(54) Title: AIRCRAFT OXYGEN SYSTEM

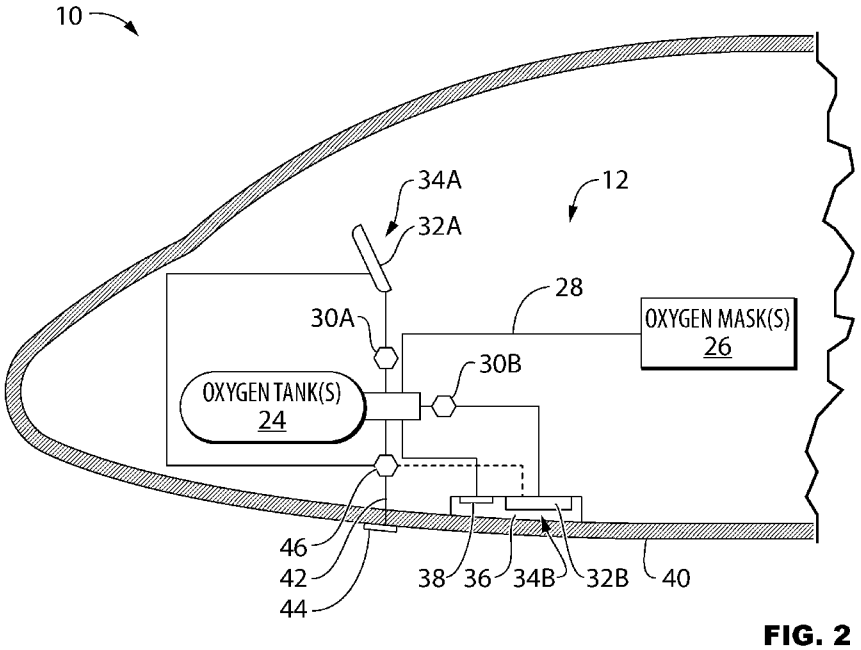

FIG. 2

(57) Abstract: Apparatus and methods for sensing and indicating a condition of an oxygen system of an aircraft are disclosed. The apparatus comprises first and second dissimilar sensors for sensing the condition of the oxygen system. The first sensor is operatively connected to an indicator viewable from the interior of the aircraft and the second sensor is operatively connected to an electronic display device viewable from the exterior of the aircraft. An apparatus for detecting an overboard discharge of an oxygen tank of the aircraft is also disclosed. The apparatus comprises a sensor configured to detect a flow of oxygen from the oxygen tank in an overboard discharge line connected to the oxygen tank, and an indicator configured to indicate the detection of the flow of oxygen by the sensor.

WO 2019/119119 A1

[Continued on next page]

MC, MK, MT, NL, NO, PL, PT, RO, RS, SE, SI, SK, SM, TR), OAPI (BF, BJ, CF, CG, CI, CM, GA, GN, GQ, GW, KM, ML, MR, NE, SN, TD, TG).

Published:

— *with international search report (Art. 21(3))*

— *in black and white; the international application as filed contained color or greyscale and is available for download from PATENTSCOPE*

AIRCRAFT OXYGEN SYSTEM

CROSS-REFERENCE TO RELATED APPLICATION(S)

[0001] This International PCT Patent Application relies for priority on U.S. Provisional Patent Application Serial No. 62/608,186 filed on December 20, 2017, the entire content of which is incorporated herein by reference.

TECHNICAL FIELD

[0002] The disclosure relates generally to aircraft, and more particularly to oxygen systems of aircraft.

BACKGROUND

[0003] Aircraft that fly above certain altitudes have an oxygen system that is configured to provide oxygen to the flight crew and passengers in certain situations such as in the event of a cabin depressurization. An oxygen system of an aircraft includes one or more oxygen tanks as a source of oxygen that can be delivered to oxygen masks for the flight crew and the passengers when needed via a pressure regulator, one or more valves and suitable delivery line(s).

[0004] Some aircraft oxygen systems have an over-pressure indicator disk located at an outlet of an overboard discharge line and that becomes dislodged/ejected/ruptured in the event of venting of an oxygen tank in case of over-pressurization. The indicator disk is typically located in a readily accessible and visible area of the exterior of the aircraft and its presence at the outlet of the overboard discharge line is an item to be verified by visual inspection during a walk-around inspection of the aircraft. If the indicator disk is missing or damaged, a new disk must be fitted and the oxygen tank(s) must be recharged before flight.

[0005] Some aircraft oxygen systems also have a traditional “steam” pressure gauge that includes a capillary tube extending between the oxygen tank and the steam gauge. Such capillary tubes can be fragile and prone to breaking during installation. Such traditional steam gauge and capillary tube arrangements also require the pressure reading indicated by the steam gauge to be subsequently and manually corrected to take into account temperature because oxygen quantity is a function of both pressure and temperature.

SUMMARY

[0006] In one aspect, the disclosure describes an apparatus for indicating a condition of an oxygen system of an aircraft. The apparatus comprises:

a first sensor for sensing the condition of the oxygen system of the aircraft;

an indicator viewable from the interior of the aircraft, the indicator being configured to indicate the condition of the oxygen system based on the sensing of the first sensor;

a second sensor for sensing the condition of the oxygen system of the aircraft, the first and second sensors being dissimilar; and

an electronic display device having a display area viewable from the exterior of the aircraft, the electronic display device being configured to indicate the condition of the oxygen system based on the sensing of the second sensor.

[0007] The condition may be indicative of a quantity of oxygen in an oxygen tank.

[0008] The condition may comprise a temperature of an oxygen tank.

[0009] The condition may comprise a pressure inside an oxygen tank.

[0010] The condition may comprise a pressure inside an oxygen tank corrected based on a temperature of the oxygen tank.

[0011] The electronic display device may be part of a servicing panel accessible from the exterior of the aircraft.

[0012] The indicator may comprise an electronic display device having a display area viewable from the interior of the aircraft.

[0013] Embodiments can include combinations of the above features.

[0014] In another aspect, the disclosure describes an apparatus for sensing a condition of an oxygen system of an aircraft. The apparatus may comprise:

a first sensor for sensing the condition of the oxygen system of the aircraft, the first sensor being operatively connected to an indicator viewable from the interior of the aircraft; and

a second sensor for sensing the condition of the oxygen system of the aircraft, the first and second sensors being dissimilar, the second sensor being operatively connected to an electronic display device having a display area viewable from the exterior of the aircraft.

[0015] The condition may be indicative of a quantity of oxygen in an oxygen tank.

[0016] The condition may comprise a temperature of an oxygen tank.

[0017] The condition may comprise a pressure inside an oxygen tank.

[0018] The condition may comprise a pressure inside an oxygen tank corrected based on a temperature of the oxygen tank.

[0019] Embodiments can include combinations of the above features.

[0020] In a further aspect, the disclosure describes an apparatus for detecting an overboard discharge of an oxygen tank of an aircraft. The apparatus comprises:

a sensor configured to detect a flow of oxygen from the oxygen tank in an overboard discharge line connected to the oxygen tank; and

an indicator configured to indicate the detection of the flow of oxygen by the sensor.

[0021] The sensor may be disposed inside the overboard discharge line and upstream of a discharge outlet of the overboard discharge line.

[0022] The sensor may be configured to detect a pressure change inside the overboard discharge line.

[0023] The sensor may comprise a frangible electrical conductor configured to be broken by the flow of oxygen in the overboard discharge line. The breaking of the frangible electrical conductor may be indicative of the overboard discharge of the oxygen tank.

[0024] The indicator may be viewable from an interior of the aircraft.

[0025] The indicator may be viewable from an exterior of the aircraft.

[0026] The indicator may be part of a crew alerting system of the aircraft.

[0027] The indicator may be part of a servicing panel of the aircraft accessible from an exterior of the aircraft.

[0028] The indicator may comprise an electronic display device.

[0029] Embodiments can include combinations of the above features.

[0030] In a further aspect, the disclosure describes a method for detecting an overboard discharge of an oxygen tank of an aircraft. The method comprises:

detecting a flow of oxygen from the oxygen tank in an overboard discharge line connected to the oxygen tank at a location upstream of a discharge outlet of the overboard discharge line; and

indicating the detection of the flow of oxygen.

[0031] The method may comprise detecting the flow of oxygen when the aircraft is powered down and indicating the detection of the flow of oxygen after powering-up the aircraft.

[0032] Detecting the flow of oxygen may comprise detecting a pressure change inside the overboard discharge line.

[0033] Detecting the flow of oxygen may comprise breaking an electrical conductor defining an electrically conductive path.

[0034] The method may comprise indicating the detection to an interior of the aircraft.

[0035] The method may comprise indicating the detection to an exterior of the aircraft.

[0036] The method may comprise using a crew alerting system of the aircraft to indicate the detection.

[0037] The method may comprise indicating the detection inside a servicing panel of the aircraft accessible from an exterior of the aircraft.

[0038] The method may comprise indicating the detection on an electronic display device.

[0039] Embodiments can include combinations of the above features.

[0040] In a further aspect, the disclosure describes an aircraft comprising an apparatus as disclosed herein.

[0041] Further details of these and other aspects of the subject matter of this application will be apparent from the detailed description included below and the drawings.

DESCRIPTION OF THE DRAWINGS

[0042] Reference is now made to the accompanying drawings, in which:

[0043] FIG. 1 is a perspective view of an exemplary aircraft comprising an oxygen system as disclosed herein;

[0044] FIG. 2 is a schematic side elevation view of a forward portion of the aircraft of FIG. 1 together with an exemplary oxygen system;

[0045] FIG. 3 is a schematic representation of an exemplary sensor for detecting an overboard discharge of an oxygen tank of the oxygen system of FIG. 2; and

[0046] FIG. 4 is a flow diagram illustrating an exemplary method for detecting an overboard discharge of the oxygen tank of the oxygen system of FIG. 2.

DETAILED DESCRIPTION

[0047] The following disclosure relates to oxygen systems of aircraft and particularly to: sensing and indicating a condition such as a quantity of oxygen in an oxygen tank; and to indicating an overboard discharge of an oxygen tank due to over-pressurization for example. In some embodiments, the apparatus disclosed herein includes two dissimilar sensors for sensing a same condition (e.g., indicative of a remaining quantity of oxygen) of the oxygen system where the condition sensed by a first sensor is indicated to the interior of the aircraft and the condition sensed by a

second sensor is indicated to the exterior of the aircraft via an electronic display device for example. The use of dissimilar sensors may provide dissimilar redundancy to the sensing of the condition of the oxygen system. In case where the condition is a pressure inside an oxygen tank, the use of the electronic display device accessible to the exterior of the aircraft in combination with such sensor may eliminate the need for a traditional arrangement including a fragile capillary tube and a steam gauge.

[0048] In some embodiments, the apparatus and methods disclosed herein may also eliminate the need for an over-pressure indicator disk and the associated visual inspection required during the walk-around inspection of the exterior of the aircraft. For example, the apparatus and methods disclosed herein may include a sensor configured to detect a flow of oxygen from an oxygen tank in an overboard discharge line connected to the oxygen tank, and an indicator configured to indicate the detection of the flow of oxygen by the sensor.

[0049] Aspects of various embodiments are described through reference to the drawings.

[0050] FIG. 1 is a perspective view of an exemplary aircraft 10 comprising oxygen system 12 as disclosed herein. Aircraft 10 may be any type of aircraft such as corporate (e.g., business jet), private, commercial and passenger aircraft suitable for civil aviation. For example, aircraft 10 may be a narrow-body, twin-engine jet airliner or may be an ultra-long range business jet. Aircraft 10 may be a fixed-wing aircraft. Aircraft 10 may comprise wings 14, flight control surfaces 16, fuselage 18, one or more engines 20 and empennage 22.

[0051] FIG. 2 is a schematic side elevation view of an outline of a forward portion of aircraft 10 and an exemplary representation of oxygen system 12 superimposed thereon. Oxygen system 12 may comprise one or more oxygen tanks 24 (referred hereinafter in the singular) operatively connected to oxygen masks 26 via low-pressure line 28 and suitable pressure regulator(s) and valve(s). Oxygen system 12 may be configured to deliver oxygen to masks 26 via line 28 during one or more predetermined situations such as during a cabin depressurization event during flight for example. Oxygen masks 26 may include one or more masks 26 for the flight crew and one or more masks 26 for passengers of aircraft 10.

[0052] Oxygen system 12 may include sensors 30A, 30B for sensing a same/common condition of oxygen system 12 of aircraft 10. In various embodiments, the sensed condition may be indicative of a remaining quantity of oxygen inside oxygen tank 24. For example, sensors 30A, 30B may each comprise a pressure transducer configured to sense a pressure inside of oxygen tank 24. In some embodiments, sensors 30A and/or 30B may be configured to sense a temperature of oxygen tank 24. In some embodiments, sensors 30A and/or 30B may be configured to sense a pressure that has already been compensated for temperature. In some embodiments, sensors 30A, 30B may comprise respective pressure transducers and oxygen system 12 may comprise one or more additional temperature sensors for sensing the temperature of oxygen tank 24 for the purpose of correcting the sensed pressures based on temperature. In various embodiments, determining the oxygen quantity inside tank 24 based on pressure and temperature, or correcting sensed pressures based on temperature may be performed automatically using one or more controllers/processors for example based on sensed measurements and stored temperature compensation data (e.g., look-up table).

[0053] In some embodiments, sensors 30A and 30B may be dissimilar and provide some dissimilar redundancy in the measurement of the condition. For example, sensors 30A and 30B may be of different types or models, sensors 30A and 30B may come from different manufacturers, sensors 30A and 30B may have different operating principles and/or sensors 30A and 30B may have some different hardware. In the case where the sensors 30A, 30B comprise pressure transducers, the sensors 30A, 30B may each comprise a deformable elastic material and an electronic part that converts the deformation of the elastic material into a digital pressure signal. The dissimilarity between the two sensors 30A, 30B may lie in the dissimilarity of the deformable elastic material used, and/or may lie in the dissimilarity of the electronic part. For example, one of the sensors may comprise an electronic part that detects deformation using strain gauges, while the other sensor may comprise an electronic part that detects deformation using a pair of capacitance plates; one plate bonded to the deformable elastic material and one plate bonded to an unpressurized surface.

[0054] Sensors 30A, 30B may be operatively connected to respective indicators 32A and 32B via respective electrical (e.g., wired) or wireless connections. In various

embodiments, indicators 32A, 32B may be electronic display devices so that the information relating to the condition of oxygen system 12 may be digitally displayed on such electronic display devices. Each electronic display device may be operatively connected to or comprise its own controller configured to control the operation of such electronic display device based on user input received and/or based on signals received via sensors 30A, 30B. The controller(s) may be configured to carry out signal processing or apply any required corrections, conversions or compensations of sensed values based on signals received from sensors 30A, 30B, other (e.g., temperature) sensors and/or other data. For example, any temperature-related compensation that is typically required on a sensed pressure value obtained using traditional capillary tube and steam gauge arrangement may no longer be required by the ground crew because such compensation may be carried out automatically by the controller and be automatically reflected in the information displayed by indicators 32A, 32B. Accordingly, the use of indicators 32A, 32B and sensors 30A, 30B may eliminate the need for a traditional arrangement including a relatively fragile capillary tube and a steam gauge where such arrangement typically requires the use of a correction table to compensate for temperature-related variations in pressure readings.

[0055] Indicator 32A may be associated with sensor 30A and be viewable from the interior of aircraft 10. Indicator 32A may comprise an electronic display device having display area 34A viewable from the interior of aircraft 10. In some embodiments, indicator 32A may be a suitable electronic display device located on the flight deck of aircraft 10. In some embodiments, indicator 32A may be part of a crew-alerting system (CAS) of aircraft 10. Indicator 32A may be associated with suitable data processing capability and be operatively connected to indicate the condition (e.g., pressure inside tank 24, remaining oxygen quantity) of oxygen system 12 based on the sensing conducted by sensor 30A.

[0056] Indicator 32B may be associated with sensor 30B and be viewable from the exterior of aircraft 10. Indicator 32B may comprise an electronic display device having display area 34B viewable from the exterior of aircraft 10. In some embodiments, indicator 32B may be an electronic display device located at servicing panel 36 of aircraft 10. In some embodiments, indicator 32B may be part of an oxygen system servicing panel 36 accessible by ground crew from the exterior of aircraft 10.

Indicator 32B may be associated with suitable data processing capability and be operatively connected to indicate the condition (e.g., pressure inside tank 24, remaining oxygen quantity) of oxygen system 12 based on sensing conducted by sensor 30B.

[0057] Electronic display devices 32A and 32B may be an electronic visual displays/screens suitable for the presentation of images, text, and/or video received electronically. Non-limiting examples of the types of electronic display devices 32A and 32B which may be suitable include: a light-emitting diode (LED) display device, a liquid crystal display (LCD) device, an organic light-emitting diode (OLED) display device and cathode ray tube (CRT) display device. Electronic display device 32B may be relatively rugged and configured to withstand challenging environments. In some embodiments, electronic display device 32B may be water resistant or substantially waterproof, resistant to the exterior environment, and have display area 34B that has glare protection and that is sunlight-readable. In other words, electronic display device 32B may be considered an "all-weather" product.

[0058] Servicing panel 36 may be accessible (e.g., to maintenance personnel or ground crew) from the exterior of aircraft 10. Servicing panel 36 may be associated with oxygen system 12 and may be disposed on aircraft 10 at a location that is convenient for servicing such system. Servicing panel 36 may comprise fill port 38 for filling oxygen tank 24 when needed. The components of servicing panel 36 may be disposed inside a cavity that is recessed in an outer skin 40 of aircraft 10 so that an access door of servicing panel 36 may be substantially flush with skin 40 and optionally seal the cavity when in the closed position to avoid producing any significant aerodynamic drag penalty. The access door of servicing panel 36 may be movable between a closed position covering display area 34B of indicator 32B and an open position where display area 34B is uncovered and viewable from the exterior of aircraft 10.

[0059] Oxygen system 12 may also comprise overboard discharge line 42 extending between oxygen tank 24 and overboard discharge outlet 44 formed at aircraft skin 40. Overboard discharge line 42 may serve to vent oxygen from oxygen tank 24 overboard in case of an over-pressurization of oxygen tank 24 for example. Accordingly, a suitable pressure relief valve may be operatively disposed between oxygen tank 24 and overboard discharge outlet 44. Oxygen system 12 may also

comprise sensor 46 configured to detect a flow of oxygen from oxygen tank 24 in overboard discharge line 42 connected to oxygen tank 24. Sensor 46 may comprise a pressure transducer or other sensing element able to sense a (e.g., sudden) change in pressure or a threshold pressure inside of overboard discharge line 42 caused by a flow (e.g., venting) of oxygen released from oxygen tank 24 via overboard discharge line 42 and discharge outlet 44.

[0060] Sensor 46 may be operatively (e.g., electrically or wirelessly) connected to indicator 32A and/or indicator 32B so that the occurrence of venting (e.g., due to over-pressurization) of oxygen tank 24 may be indicated to the interior of aircraft 10 and/or to the exterior of aircraft 10. As explained above, indicator 32A may comprise an electronic display device disposed on a flight deck and may be part of a CAS of aircraft 10 and indicator 32B may comprise an electronic display device that is part of servicing panel 36.

[0061] In some embodiments, sensor 46 could be used in conjunction with an overpressure blow-out indicator disk located at discharge outlet 44 to provide a notification of the oxygen discharge event additional to the visual indication provided by the dislodging/ejection of such indicator disk. Alternatively, the use of sensor 46 may eliminate the need for such indicator disk and provide a more convenient way of indicating an oxygen discharge event without requiring the visual inspection of such indicator disk. Accordingly, since a visual inspection of discharge outlet 44 may no longer be part of the walk-around inspection, discharge outlet 44 may be positioned at a more convenient location that does not need to be readily visible during the walk-around inspection. Consequently, overboard discharge line 42 may be routed accordingly to the more convenient location. For example, discharge outlet 44 may be disposed at a location that is not readily visible (e.g., concealed) to someone carrying out a walk-around inspection of aircraft 10. The location of discharge outlet 44 may be selected to facilitate maintenance of sensor 46 and/or to shorten a length of overboard discharge line 42. The location of discharge outlet 44 may be in a portion of aircraft 10 other than the nose area of aircraft 10. Accordingly, the use of sensor 46 instead of an indicator disk may facilitate the design and installation of overboard discharge line 42 and also provide a reliable indication of an oxygen discharge event. Sensor 46 may be positioned at any suitable location along overboard discharge line 42. For example,

sensor 46 may be disposed upstream of discharge outlet 44 of overboard discharge line 42.

[0062] FIG. 3 is a schematic representation of an exemplary sensor 46 for detecting an overboard discharge of oxygen tank 24 of oxygen system 12. It is understood that other types of sensors 46 may also be suitable. FIG. 3 shows a cross-sectional (i.e., end-on) view of a tubular overboard discharge line 42 with sensor 46 disposed to occlude a flow passage defined by overboard discharge line 42. In some embodiments, sensor 46 may be a pressure-sensitive electrical switch having frangible electrical conductor 48 defining an electrically conductive path that is irreversibly broken by an excessive pressure differential across of sensor 46. Sensor 46 may include a frangible circular diaphragm 50 with electrical conductor 48 disposed thereon or otherwise integrated therewith. Diaphragm 50 may form a frangible seal between an upstream portion of overboard discharge line 42 and a downstream portion of overboard discharge line 42. For example, sensor 46 may comprise an outer circumferential seal 52 for sealing against an inner wall of overboard discharge line 42.

[0063] As the pressure differential across diaphragm 50 exceeds a specified level due to a discharge of oxygen from oxygen tank 24, diaphragm 50 may rupture along weakening lines 54 shown in FIG. 3. The presence of weakening lines 54 may promote a controlled rupture of diaphragm 50, and consequently also of electrical conductor 48, at a predetermined calibrated pressure differential across diaphragm 50. The rupture of diaphragm 50 may be calibrated to indicate a discharge of oxygen from oxygen tank 24 out of discharge outlet 44 due to over-pressurization of oxygen tank 24.

[0064] The type of sensor 46 may permit the oxygen discharge event to be detected by sensor 46 by way of the irreversible rupture of diaphragm 50 and breakage of electrical conductor 48. Accordingly, the discharge of oxygen can rupture diaphragm 50 and hence be detected by sensor 46 even when no electrical power is supplied to sensor 46. Therefore, sensor 46 may detect an oxygen discharge event even when aircraft 10 is powered down. Then, once aircraft 10 is powered-up, the lack of continuity along the electrical conductor 48 may be detected using a continuity checker for example and the oxygen discharge event can then be indicated via indicators 32A and/or 32B. It is understood that indicators 32A and/or 32B may not necessarily be

electronic display devices and may instead be suitable indicator lights configured to be lit or flash to indicate the oxygen discharge event.

[0065] FIG. 4 is a flow diagram illustrating an exemplary method 100 for detecting an overboard discharge of oxygen tank 24. Method 100 may be performed using system 12 as disclosed herein or other systems. Method 100 may comprise:

detecting a flow of oxygen from oxygen tank 24 in an overboard discharge line 42 connected to oxygen tank 24 at a location upstream of discharge outlet 44 of overboard discharge line 42 (see block 102); and

indicating the detection of the flow of oxygen (see block 104).

[0066] Detecting the flow of oxygen may be done using sensor 46 when aircraft 10 is powered down and indicating the detection of the flow of oxygen may be done via one or more indicators 32A and/or 32B after powering-up aircraft 10.

[0067] Detecting the flow of oxygen may comprise detecting a pressure change inside overboard discharge line 42.

[0068] Detecting the flow of oxygen may comprise breaking electrical conductor 48 defining an electrically conductive path.

[0069] The detection of the flow of oxygen may be indicated to an interior of aircraft 10 via indicator 32A for example. Indicator 32A may be part of a CAS of aircraft 10. Alternatively or in addition, the detection of the flow of oxygen may be indicated to an exterior of aircraft 10 via indicator 32B for example. Indicator 32B may be part of a servicing panel 36 of aircraft 10. In various embodiments indicator 32A and/or indicator 32B may be electronic display devices.

[0070] The above description is meant to be exemplary only, and one skilled in the relevant arts will recognize that changes may be made to the embodiments described without departing from the scope of the invention disclosed. The present disclosure may be embodied in other specific forms without departing from the subject matter of the claims. The present disclosure is intended to cover and embrace all suitable changes in technology. Modifications which fall within the scope of the present invention will be apparent to those skilled in the art, in light of a review of this disclosure, and such modifications are intended to fall within the appended claims. Also, the scope

of the claims should not be limited by the preferred embodiments set forth in the examples, but should be given the broadest interpretation consistent with the description as a whole.

WHAT IS CLAIMED IS:

1. An apparatus for indicating a condition of an oxygen system of an aircraft, the apparatus comprising:

a first sensor for sensing the condition of the oxygen system of the aircraft;

an indicator viewable from the interior of the aircraft, the indicator being configured to indicate the condition of the oxygen system based on the sensing of the first sensor;

a second sensor for sensing the condition of the oxygen system of the aircraft, the first and second sensors being dissimilar; and

an electronic display device having a display area viewable from the exterior of the aircraft, the electronic display device being configured to indicate the condition of the oxygen system based on the sensing of the second sensor.

2. The apparatus as defined in claim 1, wherein the condition is indicative of a quantity of oxygen in an oxygen tank.

3. The apparatus as defined in claim 1, wherein the condition comprises a temperature of an oxygen tank.

4. The apparatus as defined in claim 1, wherein the condition comprises a pressure inside an oxygen tank.

5. The apparatus as defined in claim 1, wherein the condition comprises a pressure inside an oxygen tank corrected based on a temperature of the oxygen tank.

6. The apparatus as defined in any one of claims 1 to 5, wherein the electronic display device is part of a servicing panel accessible from the exterior of the aircraft.

7. The apparatus as defined in any one of claims 1 to 6, wherein the indicator comprises an electronic display device having a display area viewable from the interior of the aircraft.

8. An aircraft comprising the apparatus as defined in any one of claims 1 to 7.

9. An apparatus for sensing a condition of an oxygen system of an aircraft, the apparatus comprising:

a first sensor for sensing the condition of the oxygen system of the aircraft, the first sensor being operatively connected to an indicator viewable from the interior of the aircraft; and

a second sensor for sensing the condition of the oxygen system of the aircraft, the first and second sensors being dissimilar, the second sensor being operatively connected to an electronic display device having a display area viewable from the exterior of the aircraft.

10. The apparatus as defined in claim 9, wherein the condition is indicative of a quantity of oxygen in an oxygen tank.

11. The apparatus as defined in claim 9, wherein the condition comprises a temperature of an oxygen tank.

12. The apparatus as defined in claim 9, wherein the condition comprises a pressure inside an oxygen tank.

13. The apparatus as defined in claim 9, wherein the condition comprises a pressure inside an oxygen tank corrected based on a temperature of the oxygen tank.

14. An aircraft comprising the apparatus as defined in any one of claims 9 to 13.

15. An apparatus for detecting an overboard discharge of an oxygen tank of an aircraft, the apparatus comprising:

a sensor configured to detect a flow of oxygen from the oxygen tank in an overboard discharge line connected to the oxygen tank; and

an indicator configured to indicate the detection of the flow of oxygen by the sensor.

16. The apparatus as defined in claim 15, wherein the sensor is disposed inside the overboard discharge line and upstream of a discharge outlet of the overboard discharge line.

17. The apparatus as defined in claim 15 or claim 16, wherein the sensor is configured to detect a pressure change inside the overboard discharge line.

18. The apparatus as defined in any one of claims 15 to 17, wherein the sensor comprises a frangible electrical conductor configured to be broken by the flow of oxygen in the overboard discharge line, the breaking of the frangible electrical conductor being indicative of the overboard discharge of the oxygen tank.

19. The apparatus as defined in any one of claims 15 to 18, wherein the indicator is viewable from an interior of the aircraft.

20. The apparatus as defined in any one of claims 15 to 18, wherein the indicator is viewable from an exterior of the aircraft.

21. The apparatus as defined in any one of claims 15 to 18, wherein the indicator is part of a crew alerting system of the aircraft.

22. The apparatus as defined in any one of claims 15 to 18, wherein the indicator is part of a servicing panel of the aircraft accessible from an exterior of the aircraft.

23. The apparatus as defined in any one of claims 15 to 22, wherein the indicator comprises an electronic display device.

24. An aircraft comprising the apparatus as defined in any one of claims 15 to 23.

25. A method for detecting an overboard discharge of an oxygen tank of an aircraft, the method comprising:

detecting a flow of oxygen from the oxygen tank in an overboard discharge line connected to the oxygen tank at a location upstream of a discharge outlet of the overboard discharge line; and

indicating the detection of the flow of oxygen.

26. The method as defined in claim 25, comprising detecting the flow of oxygen when the aircraft is powered down and indicating the detection of the flow of oxygen after powering-up the aircraft.

27. The method as defined in claim 25 or claim 26, wherein detecting the flow of oxygen comprises detecting a pressure change inside the overboard discharge line.

28. The method as defined in any one of claims 25 to 27, wherein detecting the flow of oxygen comprises breaking an electrical conductor defining an electrically conductive path.

29. The method as defined in any one of claims 25 to 28, comprising indicating the detection to an interior of the aircraft.

30. The method as defined in any one of claims 25 to 28, comprising indicating the detection to an exterior of the aircraft.

31. The method as defined in any one of claims 25 to 28, comprising using a crew alerting system of the aircraft to indicate the detection.

32. The method as defined in any one of claims 25 to 28, comprising indicating the detection inside a servicing panel of the aircraft accessible from an exterior of the aircraft.

33. The method as defined in any one of claims 25 to 32, comprising indicating the detection on an electronic display device.

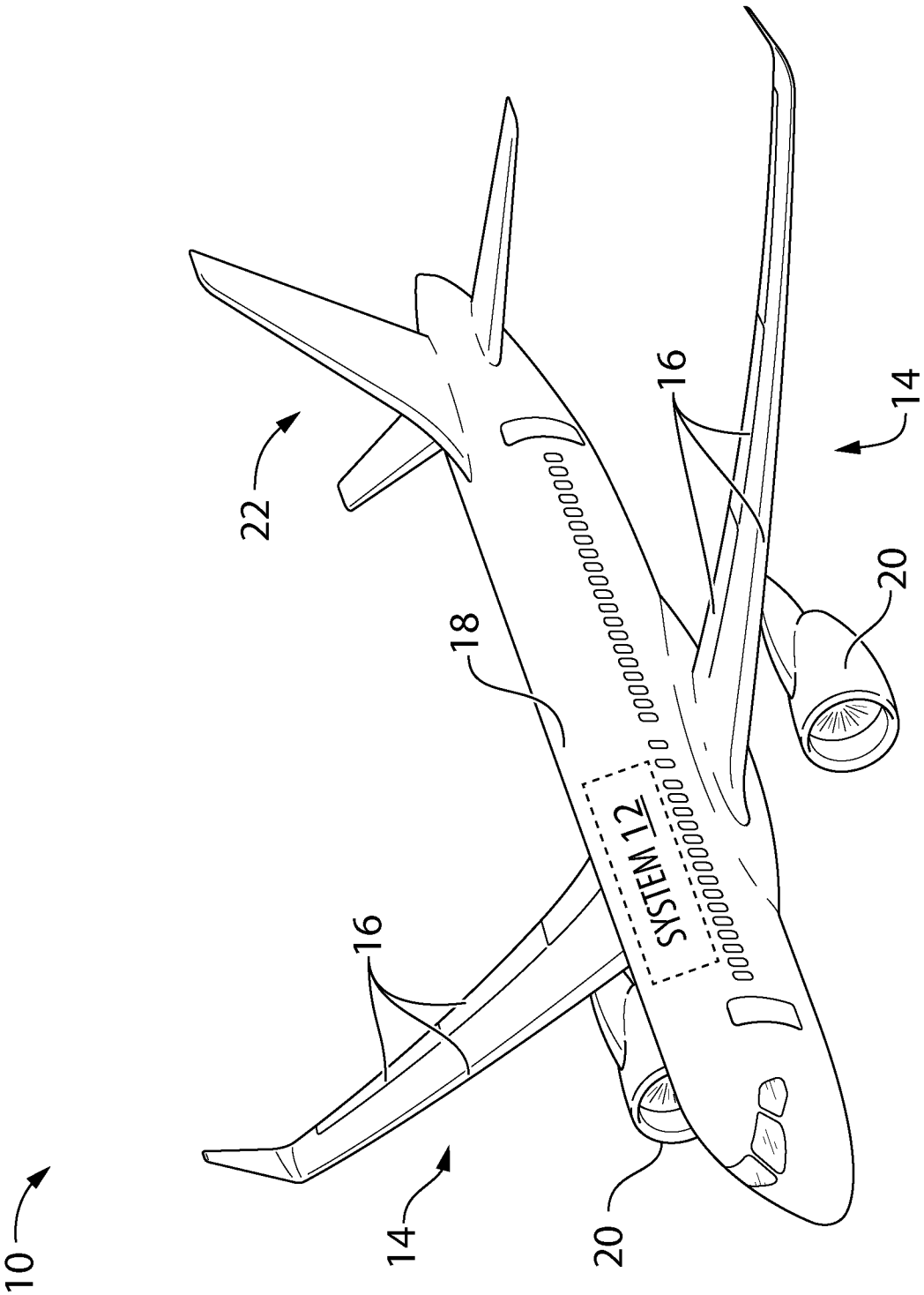

FIG.1

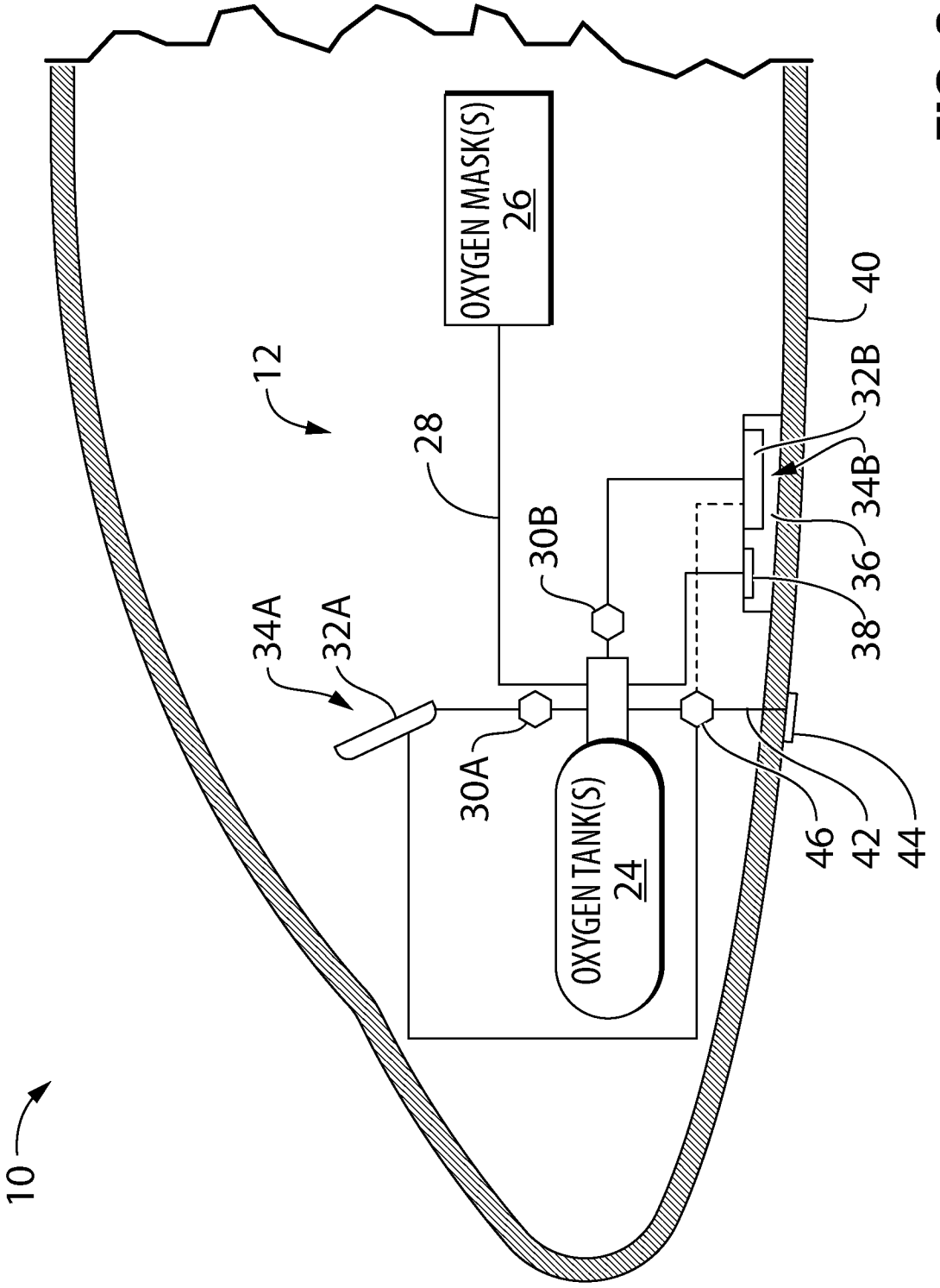
OXYGEN MASK(S)
26
12
28
30B
34A
32A
30A
OXYGEN TANK(S)
24
40
32B
34B
36
38
46
42
44
10

FIG. 2

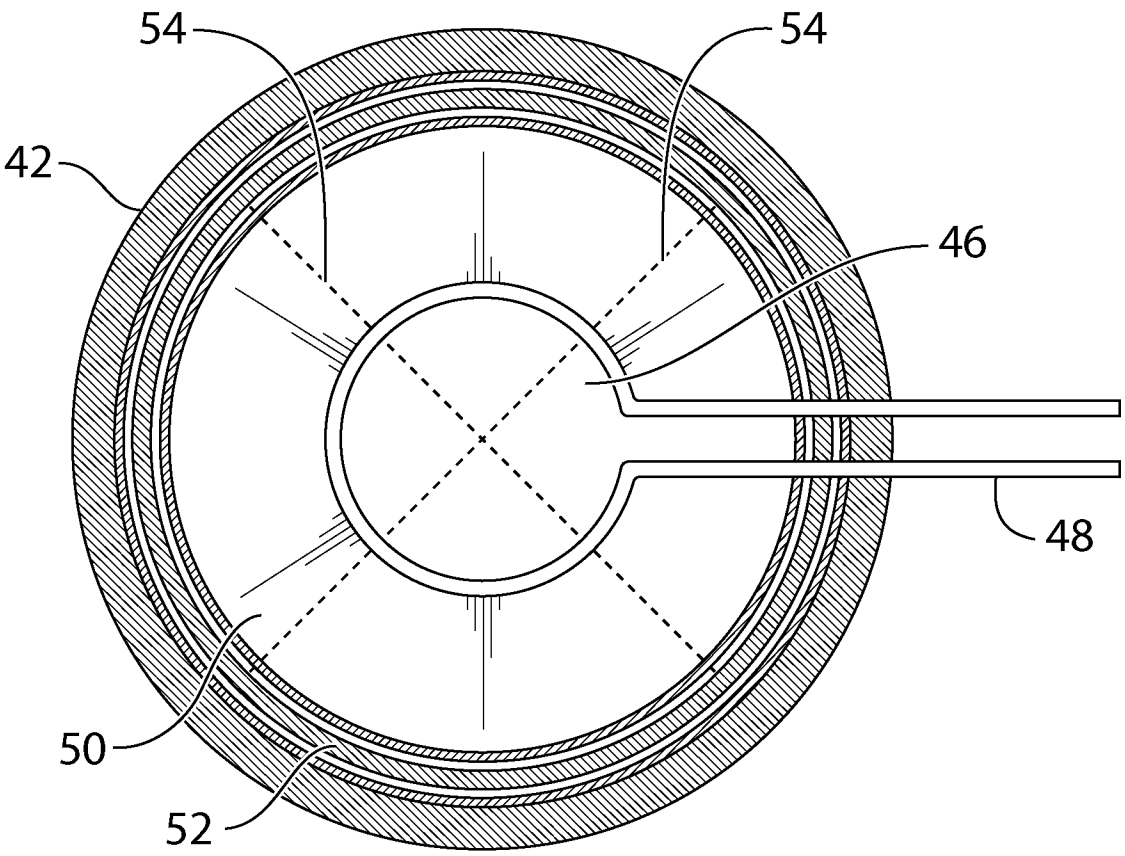

FIG. 3

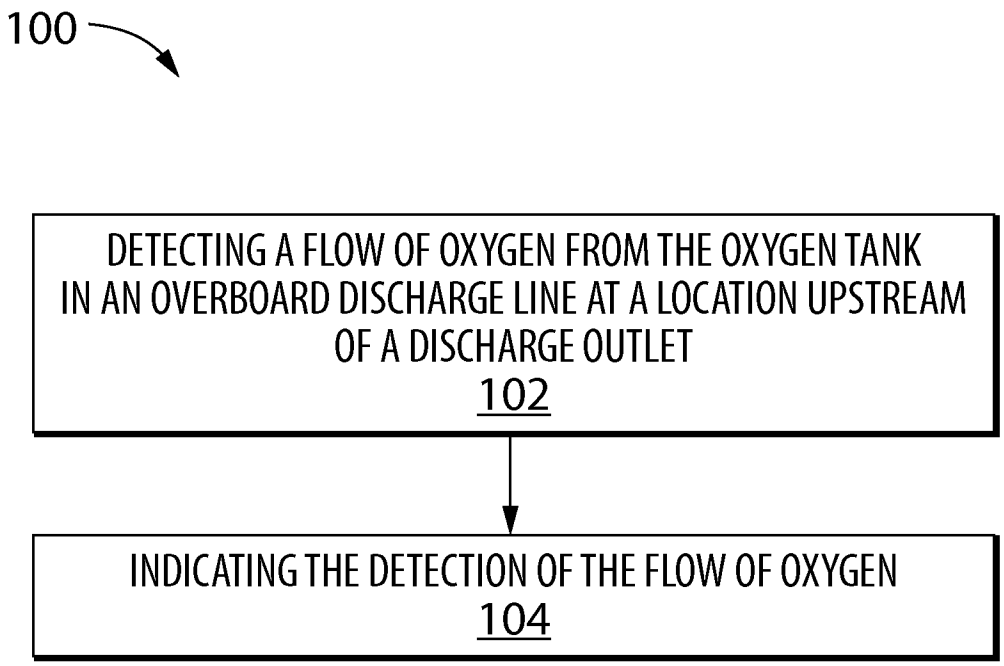
100
DETECTING A FLOW OF OXYGEN FROM THE OXYGEN TANK IN AN OVERBOARD DISCHARGE LINE AT A LOCATION UPSTREAM OF A DISCHARGE OUTLET
102
INDICATING THE DETECTION OF THE FLOW OF OXYGEN
104

FIG. 4

INTERNATIONAL SEARCH REPORT

International application No.
PCT/CA2018/051610

A. CLASSIFICATION OF SUBJECT MATTER
IPC: ***G01F 15/06*** (2006.01), ***B64D 25/00*** (2006.01), ***B64F 5/60*** (2017.01), ***F17C 13/02*** (2006.01), ***G01F 1/05*** (2006.01), ***G01F 1/34*** (2006.01) (more IPCs on the last page)

According to International Patent Classification (IPC) or to both national classification and IPC

B. FIELDS SEARCHED

Minimum documentation searched (classification system followed by classification symbols)
IPC: ***G01F 15/06*** (2006.01), ***B64D 25/00*** (2006.01), ***B64F 5/60*** (2017.01), ***F17C 13/02*** (2006.01), ***G01F 1/05*** (2006.01), ***G01F 1/34*** (2006.01), ***G01L 19/04*** (2006.01)

Documentation searched other than minimum documentation to the extent that such documents are included in the fields searched

Electronic database(s) consulted during the international search (name of database(s) and, where practicable, search terms used)

Databases: Canadian Patent Database, Questel Orbit, Google Patents
Keywords: aircraft, oxygen, tank, cylinder, mask, display, quantity, level, temperature, pressure, overboard discharge line, flow, overpressure, overflow, condition, first, second, sensor, outside, exterior, inside, interior, indicator, detect, cabin, viewable, interface, monitor, screen, walk around, visual

C. DOCUMENTS CONSIDERED TO BE RELEVANT

Category*	Citation of document, with indication, where appropriate, of the relevant passages	Relevant to claim No.
Y	**CN 100565121 C** (QUAST) 02 December 2009 (2009-12-02) background section; figure 1 and related text	1-15, 19, 21, 23-25, 29, 31, 33
Y	**US 7,843,355 B2** (DAVIS) 30 November 2010 (2010-11-30) abstract; column 2, lines 2-5; column 2, line 64-column 3, line 2	1-14
Y	**US 2003/0111112 A1** (GILL et al.) 19 June 2003 (2003-06-19) paragraphs [0027] and [0036]; figure 2	15, 19, 21, 23-25, 29, 31, 33

☐ Further documents are listed in the continuation of Box C.

☑ See patent family annex.

* Special categories of cited documents:
"A" document defining the general state of the art which is not considered to be of particular relevance
"E" earlier application or patent but published on or after the international filing date
"L" document which may throw doubts on priority claim(s) or which is cited to establish the publication date of another citation or other special reason (as specified)
"O" document referring to an oral disclosure, use, exhibition or other means
"P" document published prior to the international filing date but later than the priority date claimed

"T" later document published after the international filing date or priority date and not in conflict with the application but cited to understand the principle or theory underlying the invention
"X" document of particular relevance; the claimed invention cannot be considered novel or cannot be considered to involve an inventive step when the document is taken alone
"Y" document of particular relevance; the claimed invention cannot be considered to involve an inventive step when the document is combined with one or more other such documents, such combination being obvious to a person skilled in the art
"&" document member of the same patent family

Date of the actual completion of the international search	Date of mailing of the international search report
07 March 2019 (07-03-2019)	08 March 2019 (08-03-2019)

Name and mailing address of the ISA/CA	Authorized officer
Canadian Intellectual Property Office Place du Portage I, C114 - 1st Floor, Box PCT 50 Victoria Street Gatineau, Quebec K1A 0C9 Facsimile No.: 819-953-2476	Suchita Nakra (819) 639-8520

INTERNATIONAL SEARCH REPORT
Information on patent family members

International application No.
PCT/CA2018/051610

Patent Document Cited in Search Report	Publication Date	Patent Family Member(s)	Publication Date
CN100565121C	02 December 2009 (02-12-2009)	CN101082512A	05 December 2007 (05-12-2007)
US7843355B2	30 November 2010 (30-11-2010)	US2006220890A1	05 October 2006 (05-10-2006)
		GB0506466D0	04 May 2005 (04-05-2005)
		GB0606353D0	10 May 2006 (10-05-2006)
		GB2424712A	04 October 2006 (04-10-2006)
		GB2424712B	06 January 2010 (06-01-2010)
US2003111112A1	19 June 2003 (19-06-2003)	US6666226B2	23 December 2003 (23-12-2003)

G01L 19/04 (2006.01)