Dec. 13, 1960 W. K. SNIDER ET AL 2,963,826

WIRING CONSTRUCTION FOR CONCRETE FLOORS OR THE LIKE

Filed July 31, 1957 2 Sheets-Sheet 1

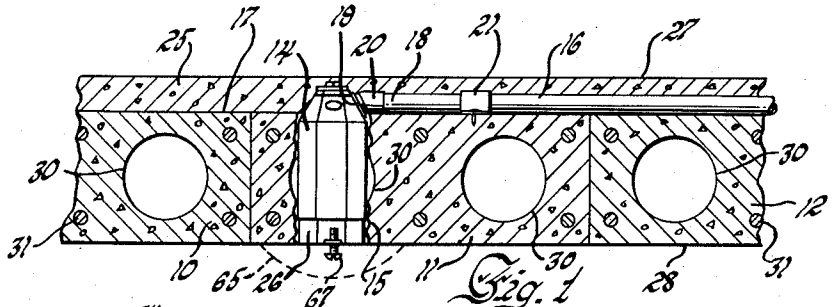

Fig. 1

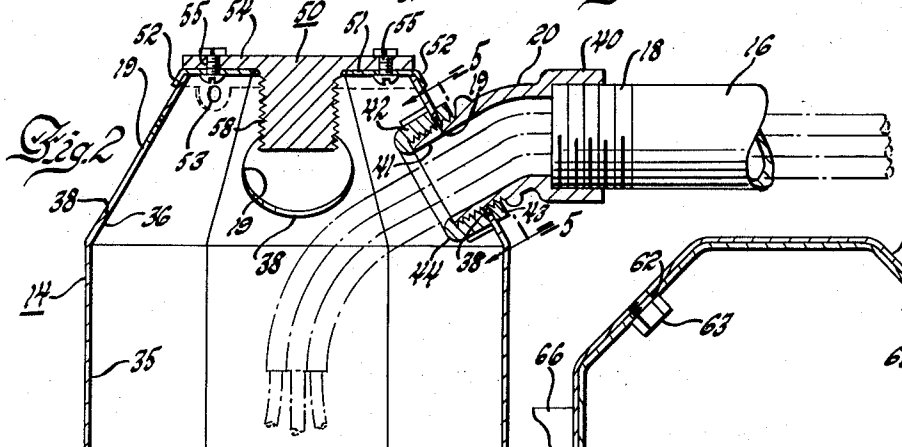

Fig. 2

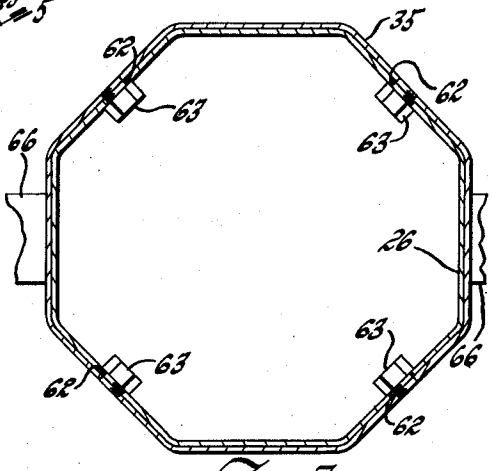

Fig. 3

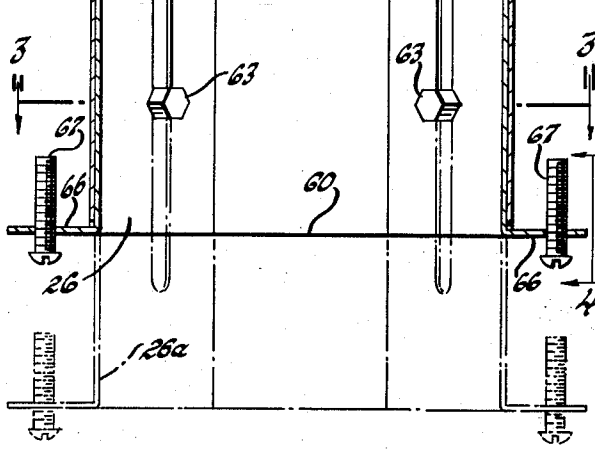

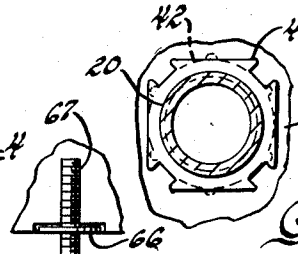

Fig. 5

Fig. 4

INVENTOR
Walter K. Snider
BY Karl D. Snider
Robert R. Candor
THEIR ATTORNEY

Dec. 13, 1960 W. K. SNIDER ET AL 2,963,826

WIRING CONSTRUCTION FOR CONCRETE FLOORS OR THE LIKE

Filed July 31, 1957 2 Sheets-Sheet 2

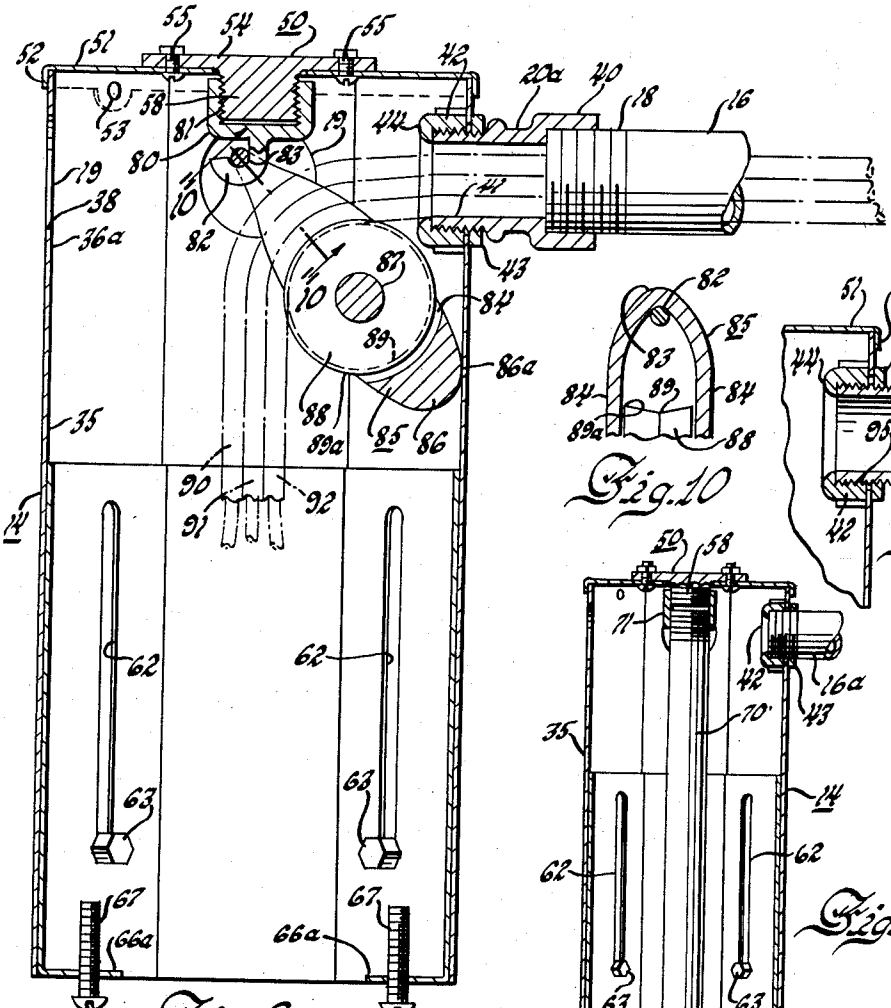

Fig 6

Fig. 10

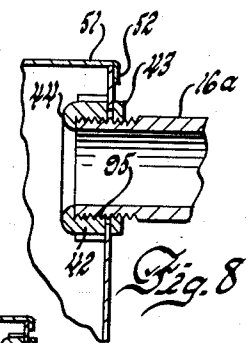

Fig. 8

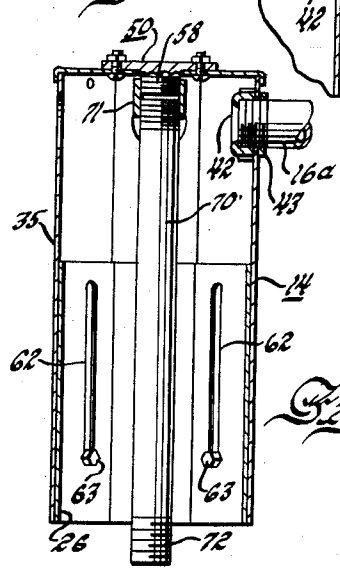

Fig. 9

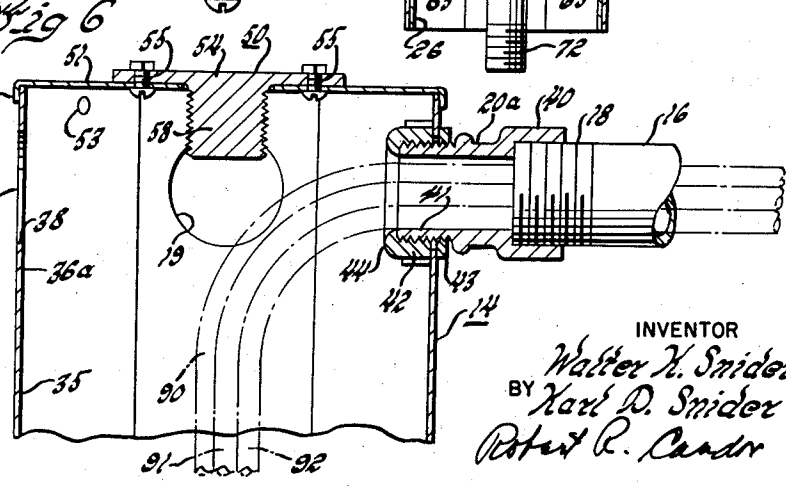

Fig. 7

INVENTOR
Walter K. Snider
BY Karl D. Snider
Robert R. Candor
THEIR ATTORNEY

United States Patent Office 2,963,826
Patented Dec. 13, 1960

2,963,826

WIRING CONSTRUCTION FOR CONCRETE FLOORS OR THE LIKE

Walter Karl Snider, 301 S. Church St., and Karl Denton Snider, 300 N. Adam St., both of New Carlisle, Ohio

Filed July 31, 1957, Ser. No. 675,430

7 Claims. (Cl. 50—127)

This invention is directed to a wiring construction for use in connection with concrete floors, and particularly in connection with floors in which a supporting sub-floor is formed by a plurality of precast concrete slabs placed side by side, and on which a layer of concrete is poured and cast to form the upper surface of the floor.

According to this invention, a plurality of precast concrete slabs are placed side by side to form a supporting sub-floor. A vertical hole is cut in the sub-floor such as in one of said slabs, and an electric fixture supporting box is placed in said hole with a main vertical barrel in the vertical hole and with an upper portion of the barrel extending above the upper surface of said slab. A rigid electric cable conduit is placed on the upper surface of said slab and is connected and secured at one end of the conduit to a conduit receiving opening in the upper part of said barrel in a manner to support the box in the hole by means of the conduit. The upper end of the barrel is closed in any manner to prevent the flow of concrete into the barrel. A layer of concrete is then poured and cast on the slabs to embed the barrel and conduit. A sleeve is secured and adjusted with respect to the lower end of the barrel so the lower edge of the sleeve is at the desired relationship to the level of the lower surface of the floor. One or more electric cables pass through the conduit into the box. One or more of these cables is connected to an electric fixture. This fixture is supported from the box at the desired relationship to the lower surface of the floor.

By this construction, it is possible to place the necessary cable conduits on the precast slab sub-floor and to connect them with the desired number of electric fixture supporting boxes which are located in vertical holes cut in the slab sub-floor. The layer of concrete may then be poured and cast over the sub-floor in a manner safely to embed the conduits and electric fixture supporting boxes in place. At any time during the construction of the floor, electric cables may be pulled into the cable conduits and into the supporting boxes, and electric fixtures may be supported from such boxes and may be connected to the proper electric cables in a simple and efficient manner without the waste of time and labor in bending conduits and similar operations which have heretofore been necessary to wire this type of floor.

Accordingly, it is an object of this invention to provide an electric fixture supporting box adapted to be embedded within a horizontal floor construction of the character heretofore described and which is adapted to be connected to one or more electric conduits while resting on the sub-floor and which is then adapted to be embedded by the pouring and casting of a concrete layer thereover, and which box is adapted to have its lower end adjusted to the desired level in relationship to the lower edge of the floor construction and to have an electric fixture connected to wiring passing through said conduits and into said box.

Another object of this invention is to provide a floor construction including a plurality of precast concrete slabs

forming a sub-floor and on which one or more electric cable conduits are placed and connected to one or more electric fixture supporting boxes placed in vertical holes cut in said sub-floor and in which a layer of concrete is poured and cast to embed the conduits and the fixture supporting boxes, the conduits containing electric cables which are connected to fixtures suspended from the boxes.

Another object of this invention is to provide a method of constructing a floor with cable conduits and fixture supporting boxes embedded therein in the manner heretofore described.

Further objects of this invention will become apparent as the description proceeds with reference to the accompanying drawings in which:

Figure 1 is a diagrammatic vertical cross-section of a floor embodying this invention.

Figure 2 is a vertical cross-section of an electric fixture supporting box according to this invention.

Figure 3 is a horizontal cross-section taken along the lines 3—3 of Figure 2.

Figure 4 is a vertical elevation taken along the line 4—4 of Figure 2.

Figure 5 is a cross-section taken along the line 5—5 of Figure 2.

Figure 6 is a vertical cross-section of another embodiment of the electric fixture supporting box.

Figure 7 is another view of a portion of the box shown in Figure 6 after the pulley construction has been removed from the box.

Figure 8 shows another embodiment of the conduit connection with the fixture supporting box.

Figure 9 is a vertical cross-sectional view, on reduced scale, showing another embodiment of fixture supporting means to be used in connection with the box.

Figure 10 is a cross-section taken along the line 10—10 of Figure 6.

Referring first briefly to Figure 1, a floor construction according to this invention includes a plurality of precast concrete slabs **10**, **11**, **12**, etc. which are placed side by side in spanning relationship to supporting beams or foundations, not illustrated, and which slabs form a supporting sub-floor. One or more electric fixture supporting boxes **14** are placed respectively in one or more vertical holes **15** which are cut in one or more of the precast slabs. Preferably the holes **15** are made of a size to receive the boxes **14** snugly therein. One or more rigid electric cable conduits **16** are placed on or adjacent the upper surface **17** of the sub-floor. An end **18** of the conduit **16** is connected and secured to a conduit receiving opening **19** in the upper end of the box **14**. Such connection may be accomplished interchangeably in a connecting fixture **20**, as indicated in some of the figures, or by directly inserting the end of the conduit **16** into the box and directly connecting such end to the opening in the box, as shown in other figures. After the conduits **16** and boxes **14** have been properly positioned on the sub-floor, and the conduits **16** preferably have been rigidly secured in place to the sub-floor by fasteners **21**, to prevent displacement during pouring, then a layer of concrete **25** is poured and cast over the sub-floor to embed the conduits **16** and boxes **14** and to form the upper surface **27** of the composite floor.

An adjustable sleeve **26** is adjustably secured to the main barrel of the box **14** in such a manner that the lower edge of the sleeve **26** may be positioned at the desired level with respect to the level of the lower surface of surface **28** of the floor, this surface **28** being either the lower surface of the slabs **10**, **11**, **12**, etc. or the lower surface of a spaced or directly applied plastered ceiling or the like which may be secured to the slabs **10**, **11**, **12** as desired.

The slabs **10**, **11** and **12** may be of the type which

include one or more longitudinal passageways 30 which are formed in the slabs during the process of manufacture. Such slabs also include a plurality of reinforcing metal bars 31 which are placed laterally of the passageways 30. Preferably the vertical holes 15 are cut in a manner to intersect the passageways 30 in a manner that a minimum amount of concrete needs to be cut in order to form the holes in the slabs. The holes 15 are also in between the various metal bars 31, so the boxes 14 may be inserted in the slabs without interference from the bars 31.

Further details of this construction will become apparent by reference to other views in the drawings which will now be described.

Referring particularly to Figures 2 through 5, the box 14 includes a substantially vertical band 35 and 36 forming the perimeter of the vertical main barrel of the box which is adapted to be located in the vertical hole 15 of the floor with the upper inwardly tapered portion 36 extending above the upper surface 17 of the slabs. Such upward portion 36 has a plurality of conduit receiving openings 19 which are adapted to have their lower edges 38 substantially at the level of the upper surface 17 of the slabs. One or more of these openings 19 in each box 14 is adapted to be secured and connected to one or more rigid electric cable conduits 16. For example, an end 18 of the conduit 16 is threaded and has connected thereto an angled fixture 20 which has one end 40 threadedly engaged on the end 18, and has the other end 41 threaded and inserted in an opening 19 to be secured by a bushing 42 on the inside of the box 14, and a lock nut 43 on the outside of the box 14. Preferably the end 44 of the bushing 42 is rounded over the end of the fixture 20, so the cables or wires being pulled through the fixture are not injured by any sharp edges. The exterior surfaces of the bushing 42 and lock nut 43 are shaped to receive proper wrenches for securing the fixture 20 in the opening 19. The angle of the bend of the fixture 20 is so proportioned with respect to the taper of the portion 36, so the main axis of the box 14 is substantially at right angles to the plane of the floor, when the box and conduit are in place, as indicated in Figure 1.

The box 14 is adapted to be connected to one or more conduits 16. When a plurality of conduits 16 are connected with a box 14, some of the cables are connected with the fixture later to be described and certain of the cables are connected with other cables in the other conduits which are connected to the box 14, as is readily apparent.

A cover 50 is placed on the upper end of the box 14 and this may include a sheet metal portion 51 which has a flange 52 which may be bolted to the upper edge of the tapered portion 36 by means of the screw 53. A cast portion 54 may be bolted to the sheet metal portion 51 by means of the bolts 55. The portion 54 includes a downwardly directed threaded stud 58 to which a fixture supporting means may be secured, as indicated in Figure 9, and to which, if desired, the pulley construction shown in Figure 6 may also be secured. However, the angle of the fixture 20 preferably is such that it permits the pulling of cables therethrough without the use of such pulley construction.

A sleeve 26 is adjustably secured to the lower portion of the main barrel of the box in a manner to permit the lower edge 60 of the sleeve to be positioned at the desired level in relation to the lower surface 28 of the floor, as previously described. The sleeve 26 may be adjustably secured to the portion 35 by turning hex-headed screws 63 which pass through the slots 62 in the sleeve, and which engage threads in openings, not shown, in the barrel 35. The screws 36 may be manipulated by ratchet wrenches inserted from the bottom of the box construction. Various adjustments possible with the sleeve 26 are indicated by the full lines and the dotted lines 26*a* in Figure 2, the dotted lines 26*a* indicating a lower level for the sleeve 26 which may be used when the lower surface of the floor is formed by plaster or similar construction attached to the slabs, as previously described.

Means are provided for supporting an electric fixture 65 (Figure 1) adjacent the lower edge 28 of the floor, such fixture being indicated by the dotted line 65 in Figure 1. The supporting means may take the form of flanges 66 provided with screws 67 for attaching the necessary parts of the fixture, now used in the electric wiring art. Alternatively, the fixture may be supported by suspending a rod 70 (Figure 9) which may be attached to the stud 58 by the threaded bushing 71, and may be provided with threads 72 at its lower end, for attaching the fixture, in a manner now used in the wiring art. The flanges 66 are shown outwardly directed in Figure 2, but they may be inwardly directed, as indicated at 66*a* in Figure 6, the inward or outward flange construction being optional in either embodiment.

In the embodiment shown in Figures 6 and 7, the upper portion 36*a* is straight, vertical or untapered with respect to the main portion 35 of the main barrel. In Figures 6 and 7, similar reference characters have been used to indicate constructions which are similar to those previously described with respect to Figures 1 through 5, and only such description is given where the structure is sufficiently different to warrant such description, it being understood that otherwise the construction is substantially the same as previously described. In addition, in Figure 6, a pulley construction is shown, which may be used for aiding in the pulling of the cables through the conduit 16 into the box 14 in a manner to be more fully described.

The cover 50, while of slightly different shape from the cover 50 shown in Figure 2, has substantially the same parts, and the same reference characters have been used to indicate such parts, it being understood that the only difference is that the size of the cover 50 of Figure 6 is larger to fit over the top of the untapered portion 36*a*.

The connecting fixture 20*a* has no bend in it in this embodiment of Figure 6. Means are provided for pulling the cable structure over a pulley construction, to avoid injuring the cable by impact with the edge 44 at the end of the conduit construction. To this end, a hook fixture 80 is provided with an internal thread 81 which is adapted to engage the threads of the stud 58. The hook 82 is adapted to receive the upper pulley supporting part 83 which bridges and holds the upper ends of the flat side walls 84 of the pulley construction 85. The side walls 84 of the pulley are bridged at the lower ends by the transverse wall 86 which has a broad face 86*a* adapted to engage the inner face of the main barrel 35 when tension is put on the cable construction or on the pulling wire construction while the cables are being pulled through the wire conduit 16. Preferably, the part 83, walls 84 and transverse wall 86 are cast integrally. The side walls 84 of the pulley support the shaft 87 for the pulley wheel 88. The pulley wheel 88 preferably is slightly tapered inward toward its axial center 89 from the larger diameter edges 89*a*, to urge the cable or wire construction towards the axial center 89 of the pulley.

In use of this pulley construction, the hook member 80 is threadedly engaged with the stud 58 so the hook 82 is directed away from the particular conduit 16 which is being operated upon. The pulling wire, not shown, may be inserted into the cable conduit 16 before any hook construction 80 is in place, and such wire construction may hang downwardly in the box 14. One method of inserting the wire is to put the pulling wire in the pulley 85, before the pulley 85 is placed within the box 14. The wire is then threaded in the conduit 16 from the box, and the cables 90, 91 and 92, or the like, are attached to the wire at the other end of the conduit 16. Then the fixture 80 is threaded in place, and the pulley support 83 is

hooked over the hook **82** as indicated in Figure 6. Thereafter, the pulling wire may be pulled downwardly, the wire passing over the pulley wheel **88**, pulling the cables **90**, **91** and **92** through the conduit **16** and into the box **14** for attachment to the fixture, or to other cables which may be connected to the box in other conduits in a similar manner through other openings **19**. After the cables have been pulled into the box, the pulley structure **85** may be removed from the box and from the cables as well as the hook structure **80**. A relatively small number of hook fixtures **80** and pulleys **85** may be used to service a relatively large number of boxes **14** and conduits **16**, since the hook fixtures **80** and pulleys **85** are removed from each box **14** after the cables have been pulled into them. The fixtures **80** and pulleys **85** may then be used in other boxes **14**.

In the embodiment shown in Figure 8, the conduit **16***a* has no fixture **20** or **20***a* attached thereto. Instead, the threads **95** are formed on the end of the conduit **16***a* and the bushing **42** and lock nut **43** are placed directly on the conduit **16***a*.

Figure 9 shows a construction for supporting the fixture from the stud **58** in either of the embodiments shown in Figures 2 or 6. The coupling **71** is threaded on the stud **58** and the rod **70** is threaded into the coupling **71**, the other end of the rod **70** being threaded at **72** for attachment of a fixture in a well-known manner.

Merely by way of example, and not to limit the scope of the invention, the following sizes are given as illustrative. The precast slabs may be six, eight or ten inches in vertical thickness. The six inch slab has longitudinal openings **30** which are approximately four inches in diameter. The box to be used with the six inch slab can be 3⅜" in the horizontal dimension at right angles to the axis of the opening **30**. The eight inch and 10 inch slabs have openings **30** approximately six inches in diameter. The box to be used with the eight and ten inch slabs can be four inches in the horizontal dimension at right angles to the axis of the opening **30**. If desired, such four inch box can also be used with the six inch slab although the 3⅜" box is preferred at present.

The upper layer **25** of concrete can be approximately 2½" in height. The box can extend up into the layer **25** approximately 1⅜".

The sleeve **26** can have a three inch downward travel in the six inch slab size and a four inch travel in the eight and ten inch slab size.

The total length of the main barrel for the six inch slab preferably is sufficient for the lower edge **60** to be substantially at the same level as the lower surface of the slabs **10**, **11** and **12**, etc. The sleeve **26** may then be adjusted to compensate for the added plaster or other addition below the slab. The length of barrel of the box for the eight inch slab likewise is sufficient to reach substantially to the lower surface of the slab, and the sleeve **26** can be adjusted to compensate for the addition of plaster etc. to the lower surface of the slabs. The box for the eight inch slab may also be used with the ten inch slab if the sleeve **26** is made with a sufficient vertical adjustment such as the four inch adjustment above suggested.

The cables can be pulled into the boxes through the top opening at times, if desired, by temporarily removing the cover **50**, or before the cover **50** is placed on the box, and before the layer **25** is poured. The cables also may be pulled through the diametrically opposite opening **19** and then returned into the box before the layer **25** is poured.

It is to be seen that a construction has been provided which permits the electrical wiring to be placed on the sub-floor and to be connected to fixtures before the sub-floor without any sharp bends in the conduit constructions and also permits the wiring to be laid closely adjacent to the upper surface of the sub-floor of the slabs without danger of any of the conduit construction being exposed above the upper surface **26** of the layer of concrete. All of this is accomplished with much less labor and cost than has been possible heretofore.

While the embodiment of the invention now preferred has been disclosed, as required by statute, it is to be understood that other forms of the invention may be used, all coming within the scope of the claims which follow:

We claim:

1. In combination: a ceiling electric fixture supporting box embedded within a horizontal floor construction, said floor construction having a plurality of precast concrete slabs having longitudinal passageways placed side by side to form a supporting sub-floor and upon which a layer of concrete has been poured and cast, at least one of said slabs having a vertical hole cut slightly larger than the horizontal cross-section of said box, said vertical hole intersecting one of said longitudinal passageways, said supporting box having: a substantially vertical band forming the perimeter of the vertical main barrel of the box and located in said vertical hole with an upper portion extending above the upper surface of said slabs, and having a conduit receiving opening in its upper part, said conduit receiving opening having its lower edge substantially at the level of the upper surface of said slabs having connected and secured thereto a rigid electric cable conduit which rests on said upper surface of said slabs and supports said box in position, said upper portion being completely embedded in said layer of concrete, said supporting box having an originally removable upper cover secured to and closing the upper end of said main barrel and also embedded in said layer of concrete, said supporting box having a vertically movable sleeve adjustably secured to said vertical barrel which permitted the bottom of said sleeve to be positioned at substantially the level of the lower surface of said floor.

2. In combination: a ceiling electric fixture supporting box embedded within a horizontal floor construction, said floor construction having a plurality of precast concrete slabs having longitudinal passageways placed side by side to form a supporting sub-floor and upon which a layer of concrete has been poured and cast, at least one of said slabs having a vertical hole cut slightly larger than the horizontal cross-section of said box, said vertical hole intersecting one of said longitudinal passageways, said supporting box having: a substantially vertical band forming the perimeter of the vertical main barrel of the box and located in said vertical hole with an inwardly tapered upper portion extending above the upper surface of said slabs, and having a conduit receiving opening in its upper part, said conduit receiving opening having its lower edge substantially at the level of the upper surface of said slabs having connected and secured thereto a rigid electric cable conduit which rests on said upper surface of said slabs and supports said box in position, said upper portion being completely embedded in said layer of concrete, said supporting box having an originally removable upper cover secured to and closing the upper end of said main barrel and embedded in said layer of concrete, said supporting box having a vertically movable sleeve adjustably secured to said vertical barrel which permitted the bottom of said sleeve to be positioned at substantially the level of the lower surface of said floor.

3. In combination: a ceiling electric fixture supporting box embedded within a horizontal floor construction, said floor construction having a plurality of precast concrete slabs having longitudinal passageways placed side by side to form a supporting sub-floor and upon which a layer of concrete has been poured and cast, at least one of said slabs having a vertical hole cut slightly larger than the horizontal cross-section of said box, said vertical hole intersecting one of said longitudinal passageways, said supporting box having: a substantially vertical band forming the perimeter of the vertical main barrel of the

box and located in said vertical hole with a substantially vertical upper portion extending above the upper surface of said slabs, and having a conduit receiving opening in its upper part, said conduit receiving opening having its lower edge substantially at the level of the upper surface of said slabs having connected and secured thereto a rigid electric cable conduit which rests on said upper surface of said slabs and supports said box in position, said upper portion being completely embedded in said layer of concrete, said supporting box having an originally removable upper cover secured to and closing the upper end of said main barrel and also embedded in said layer of concrete, said supporting box having a vertically movable sleeve adjustably secured to said vertical barrel which permitted the bottom of said sleeve to be positioned at substantially the level of the lower surface of said floor.

4. A floor construction having a horizontal precast concrete slab supported over a span and having a horizontal longitudinal opening and reinforcing metal bars spaced laterally from the axis of said opening, and a vertical opening intersecting said horizontal opening and passing between said reinforcing metal bars; an electric fixture supporting box in said vertical opening having a vertical closed band forming a closed perimeter of the main barrel of the box with an upper portion extending above the upper surface of said slab, said upper portion having a conduit receiving opening passing through said band adjacent the level of the upper surface of said slab; a cover on top of said band, a rigid electric cable conduit resting adjacent the upper surface of said slab and connected and secured to said conduit receiving opening and supporting said box in said vertical opening; and a layer of concrete cast on the upper surface of said slab concealing and securing said conduit and box in position.

5. A floor construction having a plurality of precast concrete slabs side by side supported over a span and having longitudinal horizontal openings with reinforcing metal bars spaced laterally from the axes of said openings and a vertical opening intersecting one of said horizontal openings and passing between two of said reinforcing metal bars; an electric fixture supporting box having a vertical wall structure forming the main barrel of the box and located in said vertical opening with an upper portion extending above the upper surface of said slabs, said upper portion having a conduit receiving opening passing through said wall structure adjacent the level of the upper surface of said slabs; a removable cover secured on top of said vertical wall structure; a rigid electric cable conduit resting adjacent the upper surface of one of said slabs and connected and secured to said conduit receiving opening and supporting said box in said vertical opening; and a layer of concrete cast on the upper surface of said slabs concealing and securing said conduit and box in position.

6. The method of forming a horizontal floor construction which comprises: placing a plurality of precast concrete slabs having longitudinal passageways side by side to form a supporting sub-floor; cutting a vertical hole in one of said slabs to intersect one of said longitudinal passageways; placing an electric fixeure supporting box with a main vertical barrel in said vertical hole with an upper portion extending above the upper surface of said slabs; laying a rigid electric cable conduit adjacent the upper surface of said slabs and connecting and securing one end of said conduit to a conduit receiving opening in the upper part of said barrel to support said box in said hole and to permit an electric cable to enter said box from said conduit; placing a cover on the upper end of said barrel; pouring and casting a layer of concrete on said slabs to embed said barrel, cover and conduit; and adjusting and securing a sleeve to said barrel with the lower edge of said sleeve at the desired relationship to the level of the lower surface of said floor.

7. The method of forming a horizontal floor construction which comprises: placing a plurality of precast concrete slabs side by side to form a supporting sub-floor; cutting a vertical hole in said sub-floor; placing an electric fixture supporting box with a main vertical barrel in said vertical hole with an upper portion extending above the upper surface of said slabs; laying a rigid electric cable conduit on the upper surface of said slabs and connecting and securing one end of said conduit to a conduit receiving opening in the upper part of said barrel to support said box in said hole; covering the upper end of said barrel; and pouring and casting a layer of concrete on said slabs to embed said barrel and conduit.

References Cited in the file of this patent

UNITED STATES PATENTS

272,833	Goodfellow	Feb. 20, 1883
374,458	Davis	Dec. 6, 1887
1,229,576	Boyton	June 12, 1917
1,845,760	Murray	Feb. 16, 1932
1,972,794	Reese	Sept. 4, 1934
2,299,071	Rogers	Oct. 29, 1942
2,321,415	Peltz	June 8, 1943
2,811,574	Guerrero	Oct. 29, 1957

FOREIGN PATENTS

10,439	Great Britain	1914
537,996	Great Britain	July 16, 1941