Feb. 18, 1936. M. E. MUTCHLER 2,031,123

HEAD FOR INTERNAL COMBUSTION ENGINES

Filed Nov. 1, 1932 6 Sheets-Sheet 1

Fig. 1.

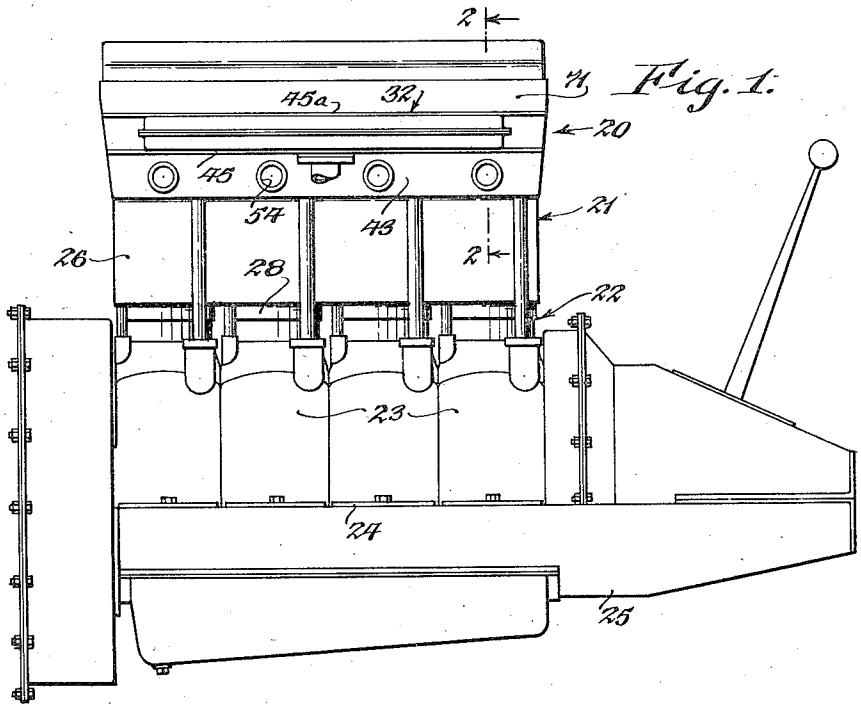

Fig. 2.

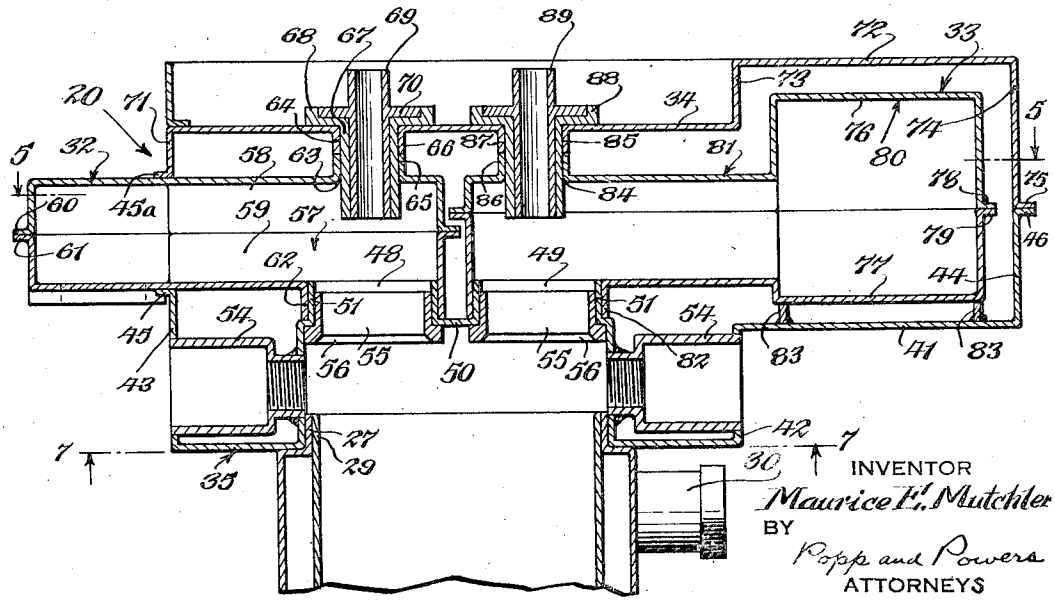

Feb. 18, 1936. M. E. MUTCHLER 2,031,123

HEAD FOR INTERNAL COMBUSTION ENGINES

Filed Nov. 1, 1932 6 Sheets-Sheet 2

Fig. 3.

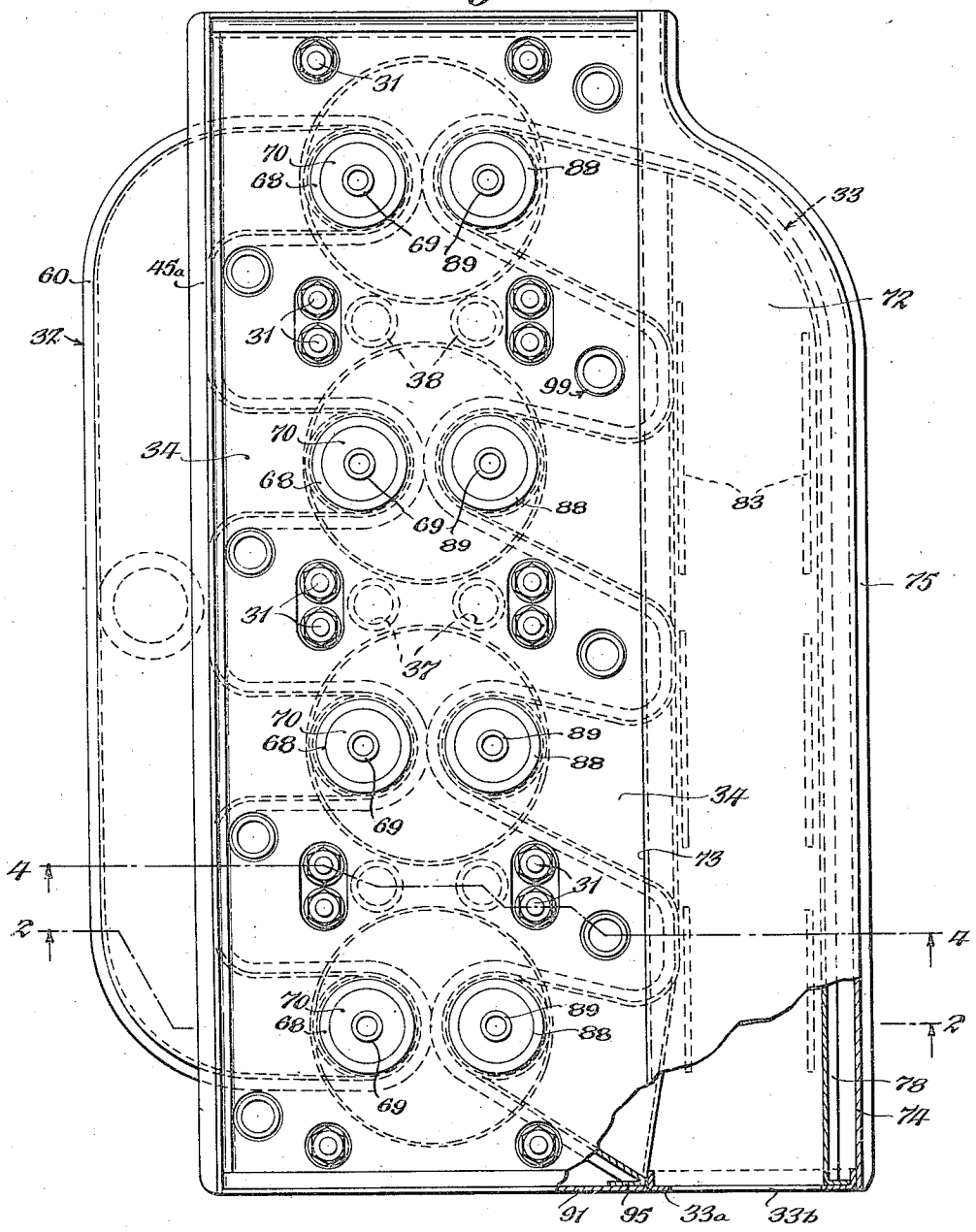

INVENTOR
Maurice E. Mutchler
BY Popp and Powers
ATTORNEYS

Feb. 18, 1936. M. E. MUTCHLER 2,031,123

HEAD FOR INTERNAL COMBUSTION ENGINES

Filed Nov. 1, 1932 6 Sheets-Sheet 3

Fig. 4

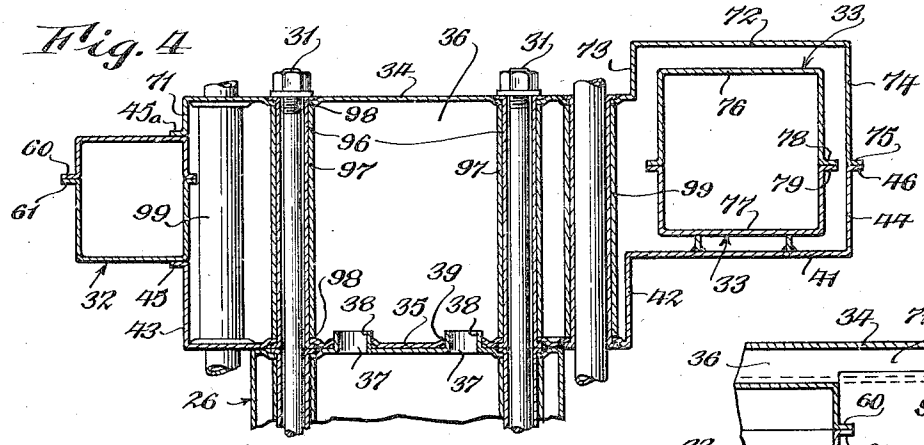

Fig. 6.

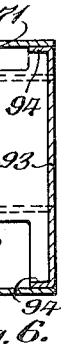

Fig. 5.

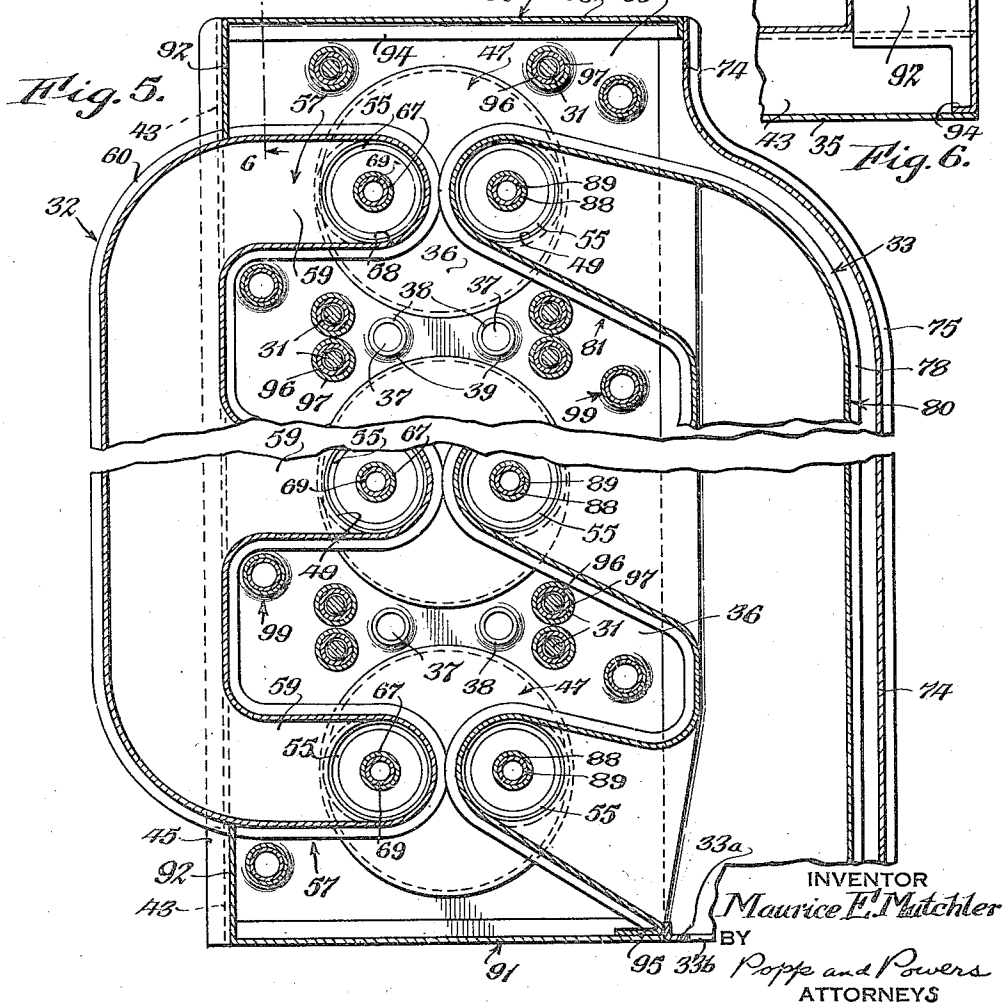

INVENTOR
Maurice E. Mutchler
BY
Popple and Powers
ATTORNEYS

Feb. 18, 1936. M. E. MUTCHLER 2,031,123

HEAD FOR INTERNAL COMBUSTION ENGINES

Filed Nov. 1, 1932 6 Sheets-Sheet 4

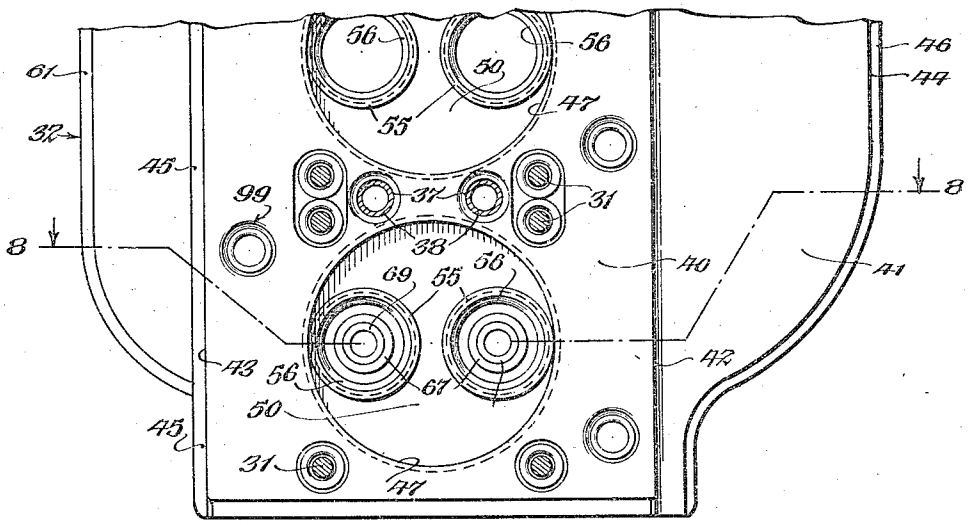

Fig. 7.

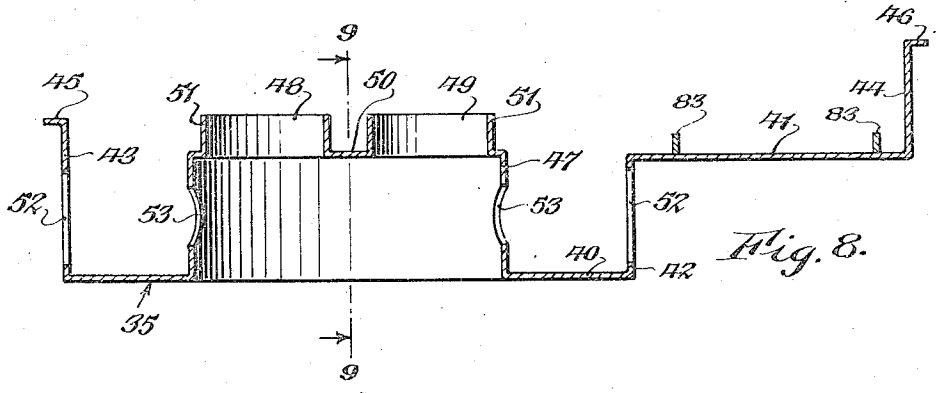

Fig. 8.

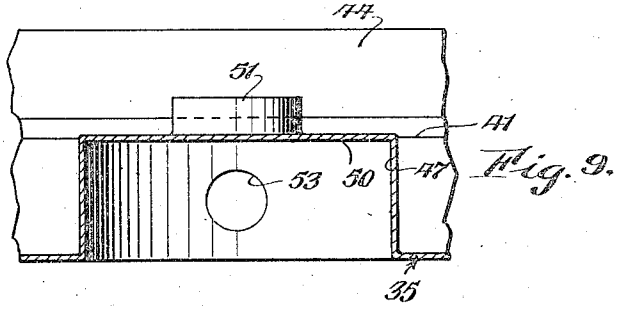

Fig. 9.

INVENTOR
Maurice E. Mutchler
BY
Popp and Powers
ATTORNEYS

Feb. 18, 1936. M. E. MUTCHLER 2,031,123

HEAD FOR INTERNAL COMBUSTION ENGINES

Filed Nov. 1, 1932 6 Sheets-Sheet 5

Fig. 10.

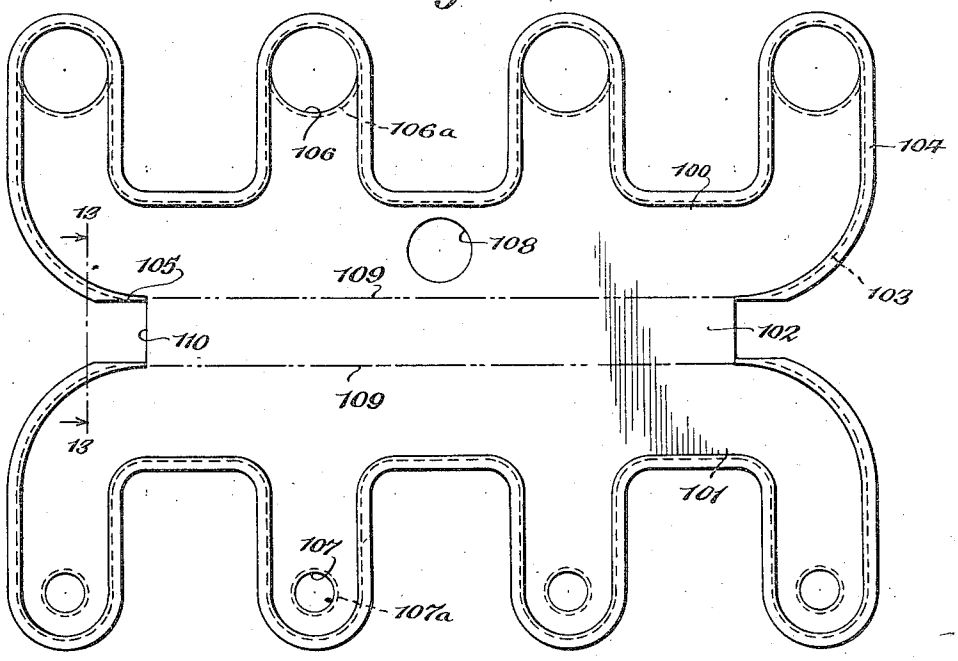

Fig. 11.

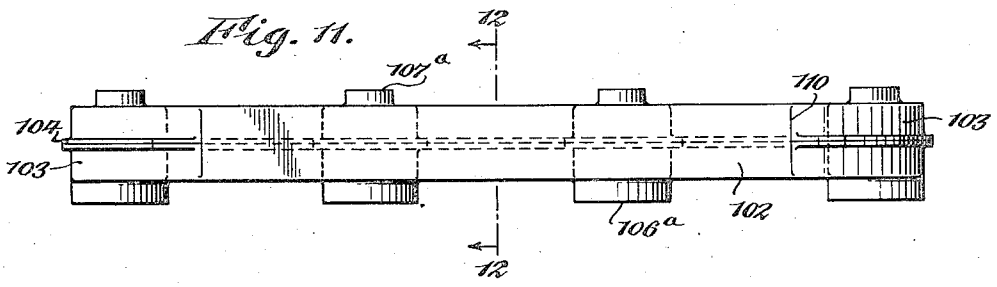

Fig. 12.

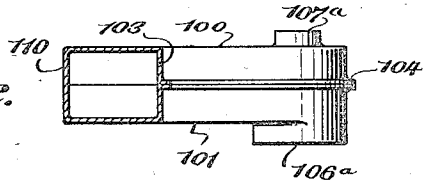

Fig. 13.

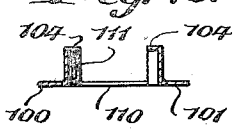

INVENTOR
Maurice E. Mutchler
BY
Popp and Powers
ATTORNEYS

Feb. 18, 1936. M. E. MUTCHLER 2,031,123

HEAD FOR INTERNAL COMBUSTION ENGINES

Filed Nov. 1, 1932 6 Sheets-Sheet 6

Fig. 14.

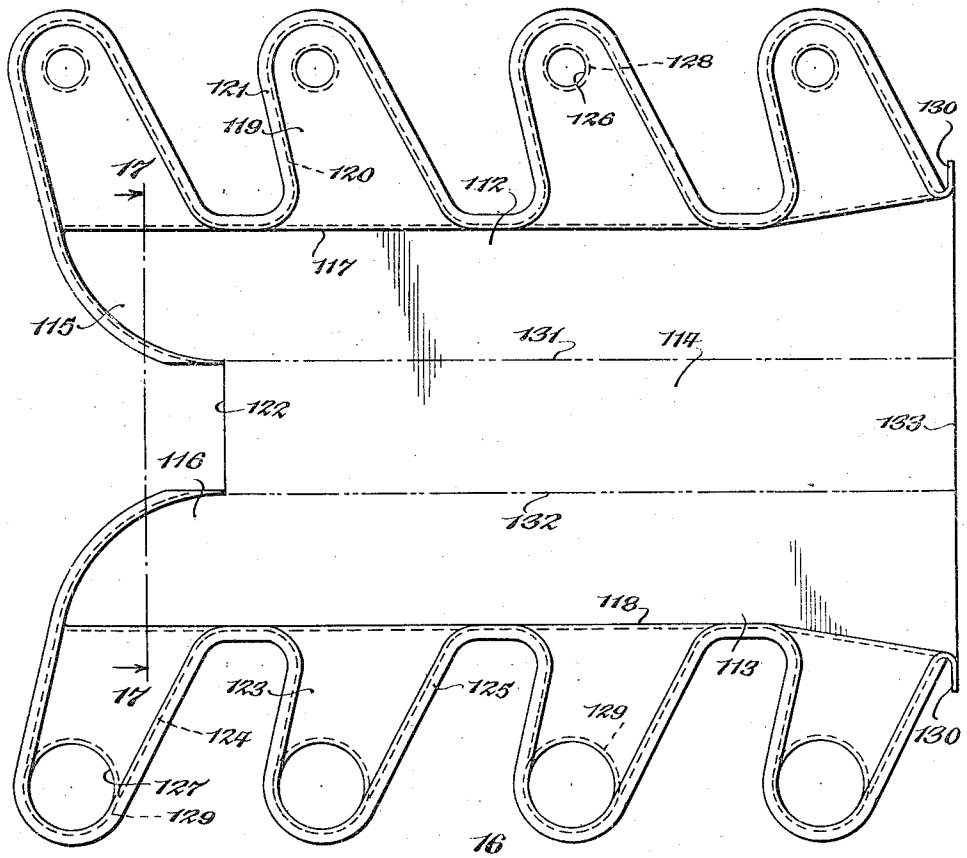

Fig. 15.

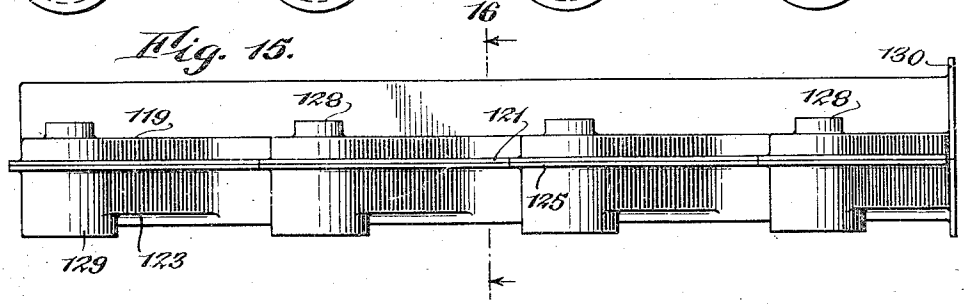

Fig. 16.

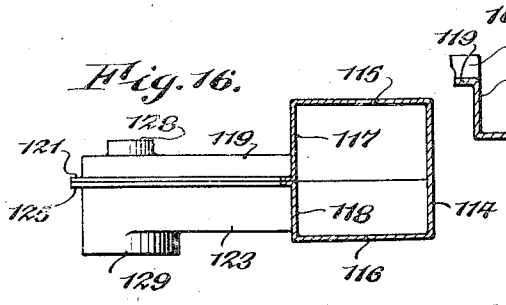

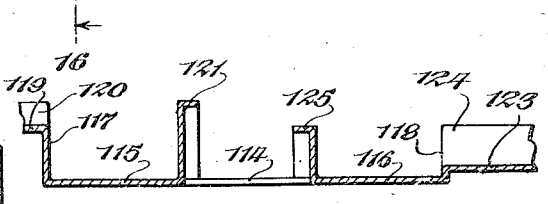

Fig. 17.

INVENTOR
Maurice E. Mutchler
BY
Popp and Powers
ATTORNEYS

Patented Feb. 18, 1936 2,031,123

UNITED STATES PATENT OFFICE

2,031,123

HEAD FOR INTERNAL COMBUSTION ENGINES

Maurice E. Mutchler, Buffalo, N. Y.

Application November 1, 1932, Serial No. 640,614

9 Claims. (Cl. 123—173)

This invention relates to improvements in heads for internal combustion engines and more particularly the invention is concerned with heads of the kind which are of sheet metal construction.

One object of the invention is to provide a unitary sheet metal construction which includes as parts thereof the exhaust and intake manifolds of the engine.

A further object is to provide a construction in which the temperature of the head is maintained at a relatively low value under normal operating conditions.

A still further object is to provide a head of the character generally described in which provision is made for cooling the exhaust manifold.

A still further object is to provide a novel form of blank from which the manifolds are produced, whereby to maintain the cost of welding at a minimum.

A still further object is to provide a novel arrangement of the parts of the head, whereby simplicity and economy in construction are obtained.

A still further object is to provide a head which is of a light weight but rigid construction.

The invention is illustrated in the accompanying drawings, in which:

Figure 1 is a side elevation of an internal combustion engine embodying features of the invention.

Figure 2 is an enlarged sectional view taken along line 2—2 of Figure 1.

Figure 3 is a top plan view of the engine with the rocker arm cover removed.

Figure 4 is a vertical section taken along line 4—4 of Figure 3.

Figure 5 is a horizontal section taken along line 5—5 of Figure 2.

Figure 6 is a fragmentary section taken along line 6—6 of Figure 5.

Figure 7 is a bottom plan view of the head and is taken along line 7—7 of Figure 2.

Figure 8 is an enlarged fragmentary sectional view of the lower housing of the head and is taken along line 8—8 of Figure 7.

Figure 9 is a fragmentary section of the lower housing and is taken along line 9—9 of Figure 8.

Figure 10 is a plan view of a single blank from which the intake manifold may be formed.

Figure 11 is a side elevation of a manifold produced from such a blank.

Figure 12 is a section taken along line 12—12 of Figure 11.

Figure 13 is a section taken along line 13—13 of Figure 10.

Figure 14 is a plan view of a single blank from which the exhaust manifold may be formed.

Figure 15 is a side elevation of a manifold produced from such a blank.

Figure 16 is a section taken along line 16—16 of Figure 15.

Figure 17 is a section taken along line 17—17 of Figure 14.

The head which is indicated generally at 20 (Figure 1) is illustrated in connection with an engine casing 21 of the type disclosed in my copending application, Serial No. 635,036, filed September 27, 1932. It is understood, of course, that the head is equally applicable to other types of casings, that illustrated being by way of example only. The casing 21 is made up of a plurality of preformed sheet metal sections 22. Each of the said sections is formed from a tubular blank and includes integral cylinder and crank case portions. The latter, which are indicated generally at 23, are of substantially rectangular cross-section and when secured together side-by-side in the manner shown provide the upper half of the crank case of the engine. As disclosed in my copending application the abutting side walls of the crank case portions 23 are secured together while the end walls of the said sections are suitably flanged as at 24 for securement to the lower half 25 of the crank case.

The cylinder portions of the sections 22, in the embodiment illustrated, provide necks over which an elongated tubular water jacket 26 fits, the said water jacket being formed upon opposite sides with flanges 27 (Figure 2) and 28 (Figure 1). The former fits snugly over the upper end of a sleeve 29 which is adapted to provide a cylinder wall of the engine while the latter fits snugly over the cylinder portion of the section. The sleeves 29 and water jacket 26 are suitably secured to the sections 22 as by welding, whereby to provide sealed passages through which a cooling medium may be circulated. The said medium may be introduced into the water jacket through suitable inlet and outlet connections, one of which is indicated at 30 (Figure 2).

The head 20 is secured upon the casing by nut and bolt fastenings 31 (Figure 4), the head being arranged upon the water jacket and fitting over the flanges 27 thereof. The head, as illustrated, includes as permanent parts thereof an intake manifold 32 and an exhaust manifold 33, the said manifolds cooperating with upper and lower housings 34 and 35, respectively, to provide a

chamber 36 through which the cooling medium is circulated. The said chamber is in communication with the water jacket 26 through openings 37 which are formed in the top wall of the water jacket. The said openings are delimited by flanges 38 which fit snugly in openings 39 formed in the bottom wall of the lower housing 35.

The lower housing 35, as best shown in Figure 8 is preferably of sheet metal. It is formed with a body portion 40 and a wing portion 41, the latter being elevated with respect to the former and being connected thereto by a vertical wall 42. At its opposite side the body 40 is formed with a vertical wall 43 while the wing portion 41 is formed with a similar wall 44. The margins of the walls 43 and 44 are preferably flanged as at 45 and 46, respectively. The body 40 is formed with upwardly extending caps 47 which are adapted to fit snugly over the flanges 27 of the water jacket and cooperate with the cylinders associated therewith to provide the compression chambers of the engine. Openings 48 and 49 are formed in the top wall 50 of each cap, the said openings being adapted to provide the intake and exhaust ports, respectively, of the engine. Flanges 51 which delimit the said ports are preferably formed during the formation of the ports and constitute integral parts of the caps. Openings 52 are formed in the vertical walls 42 and 43 of the body 40 and aligned openings 53 are formed in opposite sides of the cap 47. Spark plug holders 54 (Figure 2) are inserted and suitably secured in the said openings as by welding. Tubular elements 55 (Figure 2) are fitted and secured within the intake and exhaust ports 48 and 49, respectively, the said elements providing valve seats 56 for the intake and exhaust valves (not shown) of the engine.

The intake ports 48 are in communication with the intake manifold 32, the latter preferably constituting a permanent part of the head. The said manifold comprises an elongated sheet metal body which is formed with laterally extending arms 57 (Figure 5), there being one such arm for each intake port. The manifold 32 is, as best illustrated in Figure 2, made up of upper and lower sections 58 and 59, respectively, the said sections being preformed and then secured together along their margins as by welding. To this end the upper section 58 is formed with a marginal flange 60 while the lower section 59 is formed with a similar flange 61, it being understood that the sections of the manifold are secured together in the embodiment illustrated by welding of the flanges 60 and 61. Each arm 57 of the lower section 59 of the manifold is formed with a flange 62 which fits over the associated flange 51 of the lower housing 35. In this connection it will be noted that with the intake manifold 32 arranged in the manner described the lower section 59 thereof rests upon the marginal flange 45 of the lower housing 35. The flange 45 is preferably welded to the body of the intake manifold whereby the former is permanently united to the latter, it being noted that the arms 57 of the manifold lie wholly beyond the flange 45. The upper section 58 of the arms of the manifold 32 is formed with openings 63 through which extend the stems of the valves which are adapted to be employed in connection with the intake and exhaust ports of the engine. The opening 63 is in alignment with a similar opening 64 which is formed in the upper housing 34. The openings 63 and 64 are delimited by flanges 65 and 66 which are formed upon the respective sections of the head. The said flanges abut one another to provide a continuous passage in which a tubular element 67 is fitted, the said element being formed with a head 68 which abuts the top wall of the upper housing 34. A sleeve 69 fits in the tubular element 67 to provide a guideway for a valve stem, the said sleeve being formed with a head 70 which fits in a recess formed in the head 68 of the element 67. The various valve guide parts are suitably secured, as by welding, to one another and to the head sections with which they are associated.

It will be noted that the flange 45*a* of the upper housing 34 rests upon the top wall of the inlet manifold, the said flange being preferably secured to the said wall as by welding. The flange 45*a* is carried by a downwardly depending vertical wall 71 of the body of the housing 34. The latter is formed with an elevated portion 72 which is connected to the body portion by a vertical wall 73. The upper housing 34 also includes a downwardly depending vertical wall 74 which extends from the elevated portion 72, the said wall being formed with a marginal flange 75. The latter is preferably secured as by welding to the companion flange 46 of the lower housing 35.

The exhaust ports 49 communicate directly with the exhaust manifold 33. The latter is preferably larger than the intake manifold. It, similarly to the latter, consists of upper and lower preformed sections 76 and 77, respectively, the said sections being secured together by the union of their marginal flanges 78 and 79. The exhaust manifold 33 comprises an elongated body 80 (Figure 5) which is enclosed entirely within the casing provided by the housings 34 and 35, the said manifold being connected by arms 81 to the various exhaust ports. The connection of the arms 81 to the exhaust ports is effected in substantially the same manner as the connection of the intake manifold to the intake ports. Thus, the lower section 77 of each of the arms is formed with a flange 82 which fits snugly over the flange 51 of the associated exhaust port. The exhaust manifold 33 is preferably arranged upon ribs 83 which are carried by the wing portion 41 of the lower housing. The ribs 83 are adapted to space the manifold from the adjacent walls of the housing sections in such a manner as to insure a uniform distribution of the cooling medium over the manifold. The manifold is preferably secured to the ribs by welding in order to prevent it from vibrating. The arms 81 of the upper section 76 are formed with openings 84 which cooperate with companion openings 85 formed in the top wall of the upper housing 34, the openings 84 and 85 being delimited by flanges 86 and 87 which abut one another to provide a passage in which valve guide elements 88 and 89 (similar to the elements 67 and 69 described in connection with the intake manifold) are secured.

The cooling chamber which is provided by the manifolds and the housing sections 34 and 35 is closed at its opposite ends by L-shaped members 90 and 91 respectively (Figure 5). The short leg 92 of each of the said members fits against the adjacent arm of the intake manifold and overlaps the vertical walls 71 and 43 of the upper and lower housings 34 and 35 respectively (Figure 6). The longer leg 93 of the member 90 is flanged along its margins as at 94 for securement to the top and bottom walls of the said housings, the said longer leg extending from the shorter leg to the end of the vertical walls 74 and 44 of the upper and lower housings respectively. The

longer leg of the end wall 91 (Figure 5) is secured to a flange 95 which is formed upon the exhaust manifold 33. A cap-piece 33a (Figure 3) fits against the end of the manifold 33 and cooperates with the member 91 to seal this end of the cooling chamber, the said exhaust manifold being adapted to be connected to a suitable exhaust pipe (not shown) and communicating therewith through an opening 33b which is formed in the cap-piece 33a. It will be apparent, therefore, that the intake and exhaust manifolds are a permanent part of the head. Owing to its sheet metal construction the heat which is generated during the operation of the engine is rapidly dissipated. This is facilitated by the cooling medium which is circulated through the cooling chamber. The efficiency of the engine is increased by the cooling of the exhaust manifold in the manner described.

In order to strengthen the head the latter is preferably reinforced at those points through which the bolts of the fastenings 31 pass. To this end sleeves 96 and 97 (Figure 4) are preferably employed. The former fit within the latter and extend through openings 98 formed in the bodies of the housings 34 and 35 while the latter abut the marginal portions of the walls around the said openings. At their ends the sleeves 96 are swaged over the walls of the housings thereby forcing the metal at these points against the ends of the outer tubes 97. The bolts of the fastening means 31 extend through the inner sleeves 96 and when the head is secured upon the casing of the engine the greater part of the pressure transmitted to the head is taken up by the said sleeves. The head may also be reinforced at those points through which the push rods (not shown) pass, the sleeves in which the said rods are mounted being indicated at 99 (Figure 4).

The intake and exhaust manifolds may be formed in any suitable manner. As illustrated in Figure 2 each of the manifolds consists of a pair of preformed sheet metal sections which are united at their flanged edges as by welding, it being understood, of course, that in this embodiment the weld extends around the entire margins of the two independent parts which make up each manifold. In the embodiment of the invention illustrated in Figure 11 the manifold is formed from a single blank in order to reduce the amount, and hence the cost of welding. The blank from which the manifold shown in Figure 11 is formed is illustrated in Figure 10. It comprises two sections 100 and 101 which are connected by an integral tongue 102. Each section is deformed to provide vertical walls 103 which define the arm and body portions of the manifold, the said walls being flanged as at 104. It will be noted that the vertical wall 103 terminates at the terminal portions of the tongue 102, the reduced width of the terminal portions of the flanges 104, as indicated at 105, being a result of the scarcity of the metal at these points. While the manifold is in this stage of development the intake openings 106 are preferably formed in the ends of the arms of the section 100 while the openings 107 for the valve stems are preferably formed in the arms of the section 101, flanges 106a and 107a being formed around the openings during the formation of the latter. During these operations the opening 108 which is availed of in connecting the carburetor to the manifold may be formed. Upon completion of the operations described the two sections are folded toward one another along the lines 109, whereby the flanges 104 of the two sections meet. The tongue 102 thus provides a side wall of the manifold. The sections of the latter are thereupon secured together by welding the flanges 104 and the ends 110 (Figure 13) of the tongue 102 to the terminal portions 111 of the walls 103. It will be apparent that by forming the manifold in this manner that the amount of welding required, and hence the cost of welding, is substantially reduced owing to the elimination of any welding along that side of the manifold which is provided by the tongue 102.

In the embodiment illustrated in Figure 15 an exhaust manifold is illustrated which is formed in a manner similar to that described in connection with the intake manifold. The blank from which the exhaust manifold is formed is illustrated in Figure 14. It includes a pair of sections 112 and 113 which are connected by an integral tongue 114. The sections 112 and 113 include flat body portions 115 and 116, respectively, the said body portions lying in substantially the same plane and being extensions of the tongue 114.

The sections 112 and 113 are formed with vertical walls 117 and 118, respectively, the former, as illustrated, being of substantially a greater height than the latter. The wall 117 connects the flat body of the section 112 to the laterally extending portions 119 which are availed of in forming the arms of the manifold. The said extensions 119 are provided with a vertical side wall 120 which is flanged as at 121. At one end of the section the side wall 120 continues around the end of the flat body portion 115 and terminates at the end 122 of the tongue 114. The flange 121 preferably lies in substantially the same plane throughout its entire extent. The manifold section 113 is formed with lateral extensions 123 similar to the extensions 119 of the companion section. Likewise a marginal wall 124 is formed about the extensions 123 and terminates adjacent the end 122 of the tongue 114, the said wall being flanged as at 125. Openings 126 to accommodate the stems of the valves of the engine may be suitably formed in the laterally extending portions 119 while openings 127 may be formed in the extensions 123 to provide the ports through which the exhaust gases enter the manifold. Flanges 128 and 129 may be formed upon the extensions as a part of the opening forming operations. At the end which is to provide the outlet 133 of the manifold the blank is formed with a laterally extending flange 130. Upon completion of the operations described the section 112 is folded along the line 131 (Figure 14) while the section 113 is folded along the line 132. The flanged walls thereof may be united in the manner described.

While in the embodiments described the outlet 133 of the exhaust manifold 33 is formed at one end of the manifold, it is to be understood that, if desired, the exhaust manifold may be similar in construction to the intake manifold heretofore described. In other words the outlet may be located centrally of the ends of the manifold.

I claim as my invention:

1. A head for an internal combustion engine including a housing which consists of preformed sheet metal sections, the companion edges of said sections being spaced throughout a portion of their extent to provide an opening, a sheet metal intake manifold and a sheet metal exhaust manifold, one of said manifolds being arranged in said opening and being partially enclosed by said sections, said housing and manifolds co-operating to provide a chamber through which a cooling medi-

um may be circulated and being permanently secured together in a composite unit.

2. A head for an internal combustion engine including a housing which consists of preformed sheet metal sections, the companion edges of said sections being spaced throughout a portion of their extent to provide an opening, a sheet metal intake manifold and a sheet metal exhaust manifold, said intake manifold being arranged in said opening and being partially enclosed in said housing and said exhaust manifold being substantially entirely enclosed in said housing, said housing and said manifolds co-operating to provide a chamber through which a cooling medium may be circulated and being permanently secured together in a composite unit.

3. A head for an internal combustion engine including a sheet metal intake manifold, a sheet metal exhaust manifold, and a sheet metal housing which is formed with an opening and which is provided with intake and exhaust ports, one of said manifolds being formed with a body which is located in said opening and with arms which are arranged in said body and which communicate with said ports, said manifolds and housing co-operating to provide a chamber through which a cooling medium may be circulated and being permanently secured together in a composite unit.

4. A head for an internal combustion engine including a housing which consists of preformed sheet metal sections, the companion edges of said sections being spaced along one side to provide an opening, an intake manifold arranged in said opening, intake and exhaust ports formed in one of the sections of said housing, said intake manifold communicating with said intake ports, an exhaust manifold arranged between the sections of said housing, said exhaust manifold communicating with said exhaust ports, the sections of said housing co-operating with said manifolds to provide a chamber through which a cooling medium may be circulated.

5. A head for an internal combustion engine including an intake manifold, an exhaust manifold, a housing consisting of top and bottom preformed sheet metal sections, the companion edges of said sections being spaced throughout a portion of their extent to provide an opening, one of said manifolds being arranged in said opening and being partially enclosed by said sections, said bottom section being formed with a series of raised portions which fit over the cylinders of the engine, the top walls of said raised portions being formed with inlet and outlet openings which communicate with said intake and exhaust manifolds, said bottom section being formed at opposite sides of said raised portions with vertical wall portions and spark plug holders carried by the side walls of said raised portions and said vertical wall portions, said manifolds and housing sections co-operating to provide a chamber through which a cooling medium may be circulated.

6. A head for an internal combustion engine including an intake manifold, an exhaust manifold, a housing consisting of top and bottom preformed sheet metal sections, the companion edges of said sections being spaced throughout a portion of their extent to provide an opening, one of said manifolds being arranged in said opening and being partially enclosed by said sections, said bottom section having a body portion, a wing portion and a vertical wall connecting the two, said body portion being formed with a series of raised portions which fit over the cylinders of the engine, said raised portions being formed with inlet and outlet openings which communicate with said intake and exhaust manifolds, the other of said manifolds being located over said wing portion, said top and bottom sections co-operating with said manifolds to provide a chamber through which a cooling medium may be circulated and spark plug holders carried by said bottom section, one end of one of said holders being carried by a side wall of one of said raised portions and the other end of said holder being carried by said vertical wall.

7. A head for an internal combustion engine including a housing which consists of preformed top and bottom sheet metal sections, the companion edges of said sections being spaced throughout a portion of their extent to provide an opening, a sheet metal intake manifold and a sheet metal exhaust manifold, one of said manifolds being arranged in said opening and being partially enclosed by said sections, said bottom section being formed with a series of offset portions which are adapted to fit over the cylinders of the engine, said offset portions being formed with intake and exhaust ports which communicate with said intake and exhaust manifolds, said housing sections co-operating with said manifolds to provide a chamber through which a cooling medium may be circulated.

8. A head for an internal combustion engine including a housing which consists of preformed top and bottom sheet metal sections, the companion edges of said sections being spaced throughout a portion of their extent to provide an opening, a sheet metal intake manifold, a sheet metal exhaust manifold, one of said manifolds being arranged in said opening and being partially enclosed by said sections, said bottom section being formed with a series of offset portions which are adapted to fit over the cylinders of the engine, the top walls of said offset portions being formed with intake and exhaust ports which communicate with said intake and exhaust manifolds, the side walls of said offset portions and the oppositely disposed portions of said bottom section being formed with aligned openings and sleeves secured in said openings for accommodating the spark plugs of said engine, said housing sections co-operating with said manifolds to provide a chamber through which a cooling medium may be circulated and being permanently secured together in a composite unit.

9. A head for an internal combustion engine including a housing which consists of preformed top and bottom sheet metal sections, said sections having vertical side walls which abut one another throughout a portion of their extent and which are spaced throughout a portion of their extent to provide an opening, a sheet metal intake manifold and a sheet metal exhaust manifold, one of said manifolds being arranged in said opening and being partially enclosed by said sections, the abutting portions of said side walls being welded together and the spaced portions thereof being welded to the manifold which is arranged in said opening, whereby to secure the said housing sections and said manifolds in a composite unit and provide a chamber through which a cooling medium may be circulated.

MAURICE E. MUTCHLER.