June 29, 1943. R. TRIANA 2,323,103

KNOCK-DOWN CABINET OR THE LIKE

Filed Nov. 24, 1942

Fig. 1.

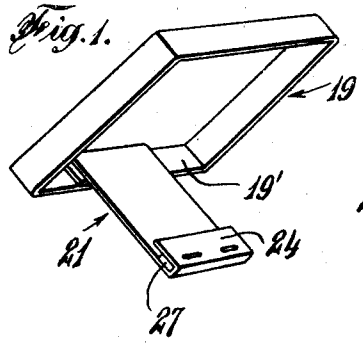

Fig. 2.

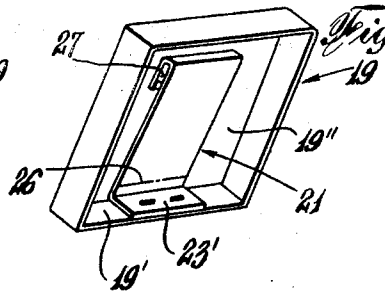

Fig. 3.

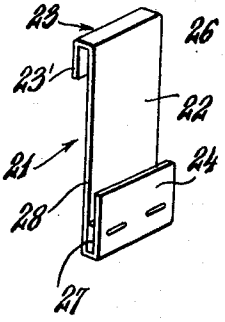

Fig. 4.

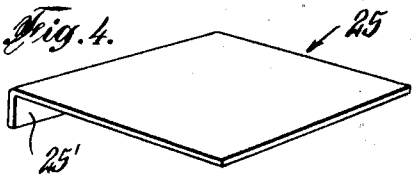

Fig. 5.

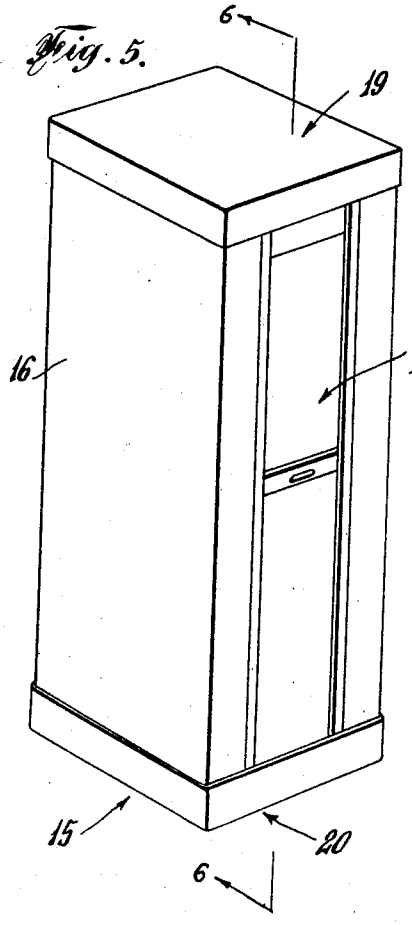

Fig. 6.

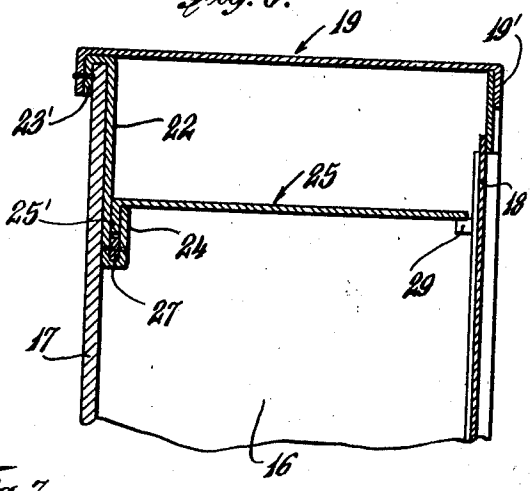

Fig. 7.

Fig. 8.

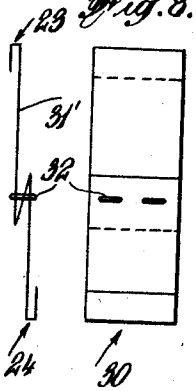

Fig. 9.

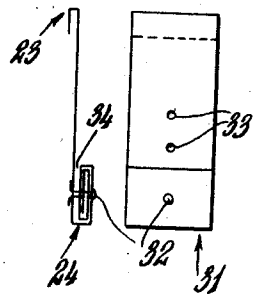

Fig. 10.

INVENTOR.
Rafael Triana

BY

ATTORNEY

Patented June 29, 1943 2,323,103

UNITED STATES PATENT OFFICE

2,323,103

KNOCKDOWN CABINET OR THE LIKE

Rafael Triana, New York, N. Y., assignor to Mortimer A. Gersten, Lee Gersten, and Louis Gersten, copartners doing business as Gersten Brothers, New York, N. Y.

Application November 24, 1942, Serial No. 466,712

7 Claims. (Cl. 312—144)

The present invention relates to cabinets of the knock-down type, made of fibre-board, card-board or the like, and more particularly to brackets for hanging a shelf within such cabinets.

Cabinets of the character mentioned, comprise separate top and bottom ends, a front door or other suitable closure means, and a body made of a single sheet bent to form the walls of the structure. Such is their usual make-up. For a shelf within the cabinet, a sheet member is usually provided, which is secured along one of its edges to a wall, in swingable relation therewith, so that it could be bent to lie flat against such wall when the cabinet is in knock-down condition.

To attach the shelf member to a cabinet body is unwieldly and cumbersome because of the large size of such body to be handled by the worker in the factory and the large assembly space needed for quantity production. To hasten manufacture at this phase, has brought about the following improvement, and therefore, the principal object of this invention is to provide for a cabinet of the class set forth, a novel and improved shelf attaching means associated with the top end or cover of the cabinet, which is a comparatively small member to handle, and therefore convenient, practical and easy for the factory worker to expedite.

A further object hereof, is to provide a novel and improved shelf supporting means for cabinets of the type mentioned, which is capable of being folded into compact relation with the cabinet component it is associated with, for "knock-down" position.

Another object of this invention is to provide a shelf supporting means of the type described, of novel and improved construction, which although carried by the top end or cover member of the cabinet, nevertheless, any stress due to weight of articles which may be on the shelf, is borne, not by the cover member, but by the body of the cabinet, along the vertical plane of a wall.

Still another object hereof is to provide a novel and improved shelf bracket of the character mentioned, which is easily adjustable to vary the position of the shelf within the cabinet.

A further object of this invention is to provide novel and improved means of the class set forth, which is easy to manufacture and use, cheap and simple in construction, and efficient in carrying out the purposes for which it is designed.

Other objects and advantages will become apparent as this disclosure proceeds.

In the accompanying drawing forming part of this application, similar characters of reference indicate corresponding parts in all the views.

Fig. 1 is a perspective view of a cabinet cover including an embodiment of this invention, in position ready to be set on the cabinet body.

Fig. 2 is a similar view of the same in "knock-down" condition.

Fig. 3 is a perspective view of the shelf hanging bracket employed in the Figs. 1 and 2.

Fig. 4 is a perspective view of a shelf member.

Fig. 5 shows a cabinet which includes the structure shown in Fig. 1 and the shelf.

Fig. 6 is a section taken at lines 6—6 in Fig. 5.

Fig. 7 is an end view of a bracket of slightly modified form adapted for the practice of the within invention.

Fig. 8 is a front view of Fig. 7.

Fig. 9 is an end view of another modified form of bracket.

Fig. 10 is a front view of Fig. 9.

In the drawing, the numeral 15 generally designates a fibre-board cabinet of the knock-down type, having side walls 16, a rear wall 17, front closure means 18, and flanged end walls, as for instance the top cover 19 and the bottom end 20. The bracket 21, may also be made of fibre-board, card-board-like, or other suitable bendable sheet material, bent to comprise a body strip 22, terminating at its top end in the hook or channel component 23, and at its lower end, in the hook or channel element 24 which is upright; said hooks or channels being at opposite sides of the bracket body. Although the embodiment illustrated shows only one such bracket 21 used, it is evident that two or more such brackets may be associated with a single top cover 19, for the support of a shelf 25, if the width of the cabinet requires or design desires a pair of brackets or such number as may be preferred.

Element 23' of hook 23, is secured to the inner surface of cover flange 19', so that hook member 23 lies within the corner formed by the juncture of said flange with the cover's panel 19''. The numeral 26 indicates a scored line on bracket 21, about which the body member 22 of said bracket can be swung to lie adjacent panel 19'' for "knock-down" condition. The numeral 27 is a spacer element inserted within channel or hook 28, and staples or other suitable fastening means are employed to maintain the assembly at the lower end of the bracket 21. The flange 25' of the shelf 25, is adapted to be set within the hook or channel 28; hook or channel 23 being set atop the upper edge of one of the body walls of the cabinet, namely in the embodi-

ment shown, the rear wall **17**. An element **29** is secured to the inner surface of the front wall component of the cabinet, which element **29** acts as a stop supporting the forward end of the shelf **25**. It is to be noted that any stress due to articles carried on the shelf **25**, would be borne entirely or substantially so, by the rear wall of the cabinet, in a vertical direction in the plane of said rear wall **17**, and by stop **29**, but that no stress due to such shelf load would be borne by the top cover **19**.

When desired, the shelf position may be altered by using one of the brackets **30** or **31**, which are of the extensible type, that is, the distance between their respective hook members **23** and **24** may be adjusted. Either body **31'** may be folded into a Z fold and the resulting plys thereof secured by a suitable pinning or fastening means **32**, as in the embodiment shown in Fig. 7, or by "rolling" up the bottom end of the bracket **31**, and pinning the plys with a fastener **32**, through the registering series of holes **33** through the several plys, always forming the hook or channel **34** to receive the shelf flange **25'** therein.

This invention is capable of numerous forms and various applications without departing from the essential features herein disclosed. It is therefore intended and desired that the embodiments set forth herein be deemed illustrative and not restrictive and that the patent shall cover all patentable novelty herein disclosed; reference being had to the following claims rather than to the specific description herein to indicate the scope of this invention.

I claim:

1. In combination with a cabinet including walls and a separate top cover having a downward flange on one end positioned exterior the cabinet, a bracket comprising a body member having a shelf supporting means at its lower end and an element hinged at the top of said member and forming a hook; said element being secured to the inner surface of the flange of the top cover whereby said bracket will depend downwardly from said cover; said hook being adapted to rest on and straddle the top edge of one of the walls of the cabinet when the top cover is mounted atop the walls, a sheet shelf member supported at an edge thereof by the shelf supporting means and a second shelf supporting means extending within the cabinet adapted to support the shelf member along another edge thereof, whereby the shelf member is maintained in use position; said body member of the bracket being adapted to be swung to lie adjacent the top member when the cabinet is to be in knock-down condition.

2. A combination as defined in claim 1, wherein the hinge line, about which the body member of the bracket could swing, is above the point of attachment of the element at the top of said body member with the flange of the top cover.

3. A combination as defined in claim 1, wherein the hinge line, about which the body member of the bracket could swing, is a distance from the underside of the top cover not exceeding the distance from said underside to the bottom edge of the flange of said top cover.

4. A combination as defined in claim 1, wherein the body member of the bracket is extensible.

5. In combination with a cabinet including walls and a separate top cover having a downward flange on one end positioned exterior the cabinet, a bracket having a body member with a hook element at its lower end extending from one side of said body member, and a second element hinged at the top of said member forming a hook extending from the opposite side of the body member; said second element being secured to the inner surface of the flange of the top cover whereby said bracket will depend downwardly from said cover; said upper hook being adapted to rest on and straddle the top edge of one of the walls of the cabinet when the top cover is mounted atop the walls, a sheet shelf member having a downward flange at one edge thereof; said flange being adapted to set within the lower hook of the bracket, and means extending within the cabinet adapted to support the shelf member along another edge thereof, whereby the shelf is maintained in use position; the body member of the bracket being adapted to be swung to lie adjacent the top member when the cabinet is to be in knock-down condition.

6. A combination as defined in claim 5, wherein the bracket is formed of a single strip of bendable sheet material.

7. In combination with a cabinet including walls and a separate top cover, a bracket comprising a body member having a shelf supporting means at its lower end; said bracket being hinged at its upper end to the cover and adapted to be swung to lie adjacent said cover when the cabinet is to be in knock-down condition and to depend from the cover within the cabinet when the cabinet is in erected condition, a sheet shelf member supported at an edge thereof by the shelf supporting means, and means extending within the cabinet adapted to support the shelf member along another edge thereof, whereby the shelf member is maintained in use position.

RAFAEL TRIANA.