PCT WORLD INTELLECTUAL PROPERTY ORGANIZATION
International Bureau

INTERNATIONAL APPLICATION PUBLISHED UNDER THE PATENT COOPERATION TREATY (PCT)

(51) International Patent Classification 6 :		(11) International Publication Number:	WO 98/22348
B65B 13/00, 27/00	A1	(43) International Publication Date:	28 May 1998 (28.05.98)

(21) International Application Number: PCT/US97/20879

(22) International Filing Date: 14 November 1997 (14.11.97)

(30) Priority Data:
08/751,875 18 November 1996 (18.11.96) US

(71) Applicant: OVALSTRAPPING, INC. [US/US]; 206 Firman, Hoquiam, WA 98550–0359 (US).

(72) Inventors: CHAK, Yee, C.; P.O. Box 152, Hoquiam, WA 98550 (US). DIERICK, Bryan, R.; P.O. Box 506, Montesano, WA 98563 (US). HYLTON, Gary, L.; 137 Eklund Street, Hoquiam, WA 98550 (US).

(74) Agents: DALEY–WATSON, Christopher, J. et al.; Seed and Berry LLP, 6300 Columbia Center, 701 Fifth Avenue, Seattle, WA 98104–7092 (US).

(81) Designated States: JP, European patent (AT, BE, CH, DE, DK, ES, FI, FR, GB, GR, IE, IT, LU, MC, NL, PT, SE).

Published
With international search report.
Before the expiration of the time limit for amending the claims and to be republished in the event of the receipt of amendments.

(54) Title: STRAPPING MACHINE HAVING PRIMARY AND SECONDARY TENSIONING UNITS AND A CONTROL SYSTEM THEREFOR

(57) Abstract

A strapping machine and method for applying flexible heat–sealable straps around objects includes a programmable control system that receives encoder and other signals from various sensors in the machine to regulate each strapping cycle. A feed/tension unit provides primary tensioning of the strap about the object based on signals from the control system. A motor driven roller and a pinch roller in the feed/tension unit each providing separate encoder signals to the control system to assist the control system in advancing and retracting the strap during feed and tensioning sequences, respectively, and provide signals indicating an exact position of the strap. A secondary tension system provides a final high tensioning force on the strap. The control system can automatically adjust individual strapping cycles, including tensioning, to compensate for various size bundles and different types of objects. Thereafter, a sealing head heat seals the strap, and severs the sealed strap from the remaining strap coil. The control system can selectively disengage the secondary tensioning during individual strapping cycles for objects that could be damaged or deformed during such high tensioning.

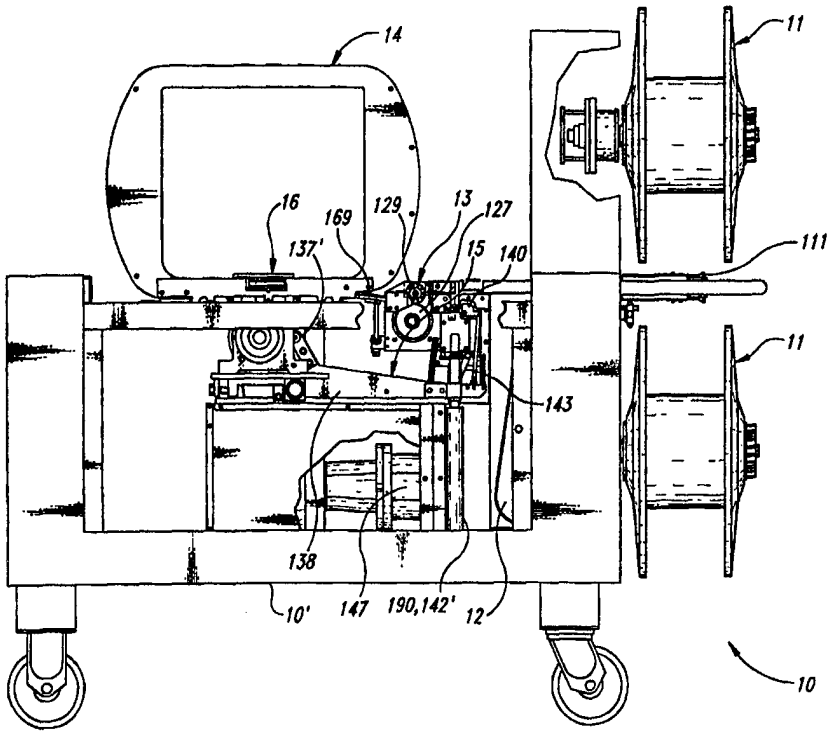

FOR THE PURPOSES OF INFORMATION ONLY

Codes used to identify States party to the PCT on the front pages of pamphlets publishing international applications under the PCT.

AL	Albania	**ES**	Spain	**LS**	Lesotho	**SI**	Slovenia
AM	Armenia	**FI**	Finland	**LT**	Lithuania	**SK**	Slovakia
AT	Austria	**FR**	France	**LU**	Luxembourg	**SN**	Senegal
AU	Australia	**GA**	Gabon	**LV**	Latvia	**SZ**	Swaziland
AZ	Azerbaijan	**GB**	United Kingdom	**MC**	Monaco	**TD**	Chad
BA	Bosnia and Herzegovina	**GE**	Georgia	**MD**	Republic of Moldova	**TG**	Togo
BB	Barbados	**GH**	Ghana	**MG**	Madagascar	**TJ**	Tajikistan
BE	Belgium	**GN**	Guinea	**MK**	The former Yugoslav Republic of Macedonia	**TM**	Turkmenistan
BF	Burkina Faso	**GR**	Greece			**TR**	Turkey
BG	Bulgaria	**HU**	Hungary	**ML**	Mali	**TT**	Trinidad and Tobago
BJ	Benin	**IE**	Ireland	**MN**	Mongolia	**UA**	Ukraine
BR	Brazil	**IL**	Israel	**MR**	Mauritania	**UG**	Uganda
BY	Belarus	**IS**	Iceland	**MW**	Malawi	**US**	United States of America
CA	Canada	**IT**	Italy	**MX**	Mexico	**UZ**	Uzbekistan
CF	Central African Republic	**JP**	Japan	**NE**	Niger	**VN**	Viet Nam
CG	Congo	**KE**	Kenya	**NL**	Netherlands	**YU**	Yugoslavia
CH	Switzerland	**KG**	Kyrgyzstan	**NO**	Norway	**ZW**	Zimbabwe
CI	Côte d'Ivoire	**KP**	Democratic People's Republic of Korea	**NZ**	New Zealand		
CM	Cameroon			**PL**	Poland		
CN	China	**KR**	Republic of Korea	**PT**	Portugal		
CU	Cuba	**KZ**	Kazakstan	**RO**	Romania		
CZ	Czech Republic	**LC**	Saint Lucia	**RU**	Russian Federation		
DE	Germany	**LI**	Liechtenstein	**SD**	Sudan		
DK	Denmark	**LK**	Sri Lanka	**SE**	Sweden		
EE	Estonia	**LR**	Liberia	**SG**	Singapore		

STRAPPING MACHINE HAVING PRIMARY AND SECONDARY TENSIONING UNITS AND A CONTROL SYSTEM THEREFOR

TECHNICAL FIELD

The present invention relates to machines that use flexible, fusible straps of various types for containment or strapping purposes. Typical applications include, but are not limited to, the strapping of magazines, newspapers, boxes, trays, etc.

BACKGROUND OF THE INVENTION

Many high-speed, automatic strapping machines have been developed, such as those disclosed in U.S. Patent Nos. 3,735,555; 3,884,139; 4,120,239; 4,312,266; 4,196,663; 4,201,127; 3,447,448; 4,387,631; and 4,473,005. As disclosed by the devices in these patents, a conveyor belt typically conveys a bundle at high speed to a strapping station where straps are automatically applied before the conveyor belt moves the strap bundle away from the device. Current machines are able to strap approximately 40 to 50 bundles per minute. However, it is desirable to further increase the speed of such strapping devices to thereby provide enhanced throughput.

Typical strapping machines employ an initial or primary tensioning apparatus that provides an initial tensioning of the strap about the bundle. A secondary tensioning apparatus thereafter provides increased or enhanced tension of the strap. Thereafter, a sealing unit or head seals the strap, typically through the use of a heated knife mechanism, to complete the bundling operation.

Prior strapping devices relied exclusively on mechanical assemblies, such as multiple cam and follower mechanisms, piston driven linkages, etc. for timing. Such mechanical mechanisms can provide quite rapid strapping of certain bundles. However, if bundles of various sizes, and consisting of various types of material, are to be bundled, such mechanical strapping devices can excel in strapping only one size bundle of objects, while poorly strapping another size bundle or a bundle of different objects. Such mechanical, or electromechanical, machines are unable to automatically adjust for differing size bundles or bundles of different objects that are rapidly sent to

the machine. Additionally, such mechanical devices may be unable to effectively bundle objects at speeds in excess of 60 bundles per minute. Importantly, both the primary and secondary tensioning devices are unable to reliably operate at such high speeds.

In general, the strapping machines currently on the market use traditional electromechanical components such as clutches, brakes, V-belts, etc. for power transmission. The widespread use of servo controls in other industries, however, now makes their use in strapping machines an economically and technically viable alternative to these traditional electromechanical devices.

Traditional servo drive architecture, however, typically involves the use of a PLC (programmable logic controller) platform and so called "smart" servo drive cards to drive the servo motors. Unfortunately, this architecture imposes significant delays in the control program which are not acceptable at high speeds. The PLC based system essentially operates in a master/slave relationship with a main central processing unit ("CPU") issuing a command to the drive card and the drive card executing the command; no real time link between the CPU and the card is provided. Without a real time link, the control system is inflexible and the CPU does not have complete control over the move routines sent to the servo motors.

SUMMARY OF THE INVENTION

The present invention improves upon prior strapping devices, and provides additional benefits, by employing a control system or machine controller that performs the control functions of a programmable controller in addition to providing servo drive controls. Using variables in the control system, the banding and sealing cycle can be easily altered to fit various production and package requirements.

The present strapping machine employs servo motors for use with the sealing head and feed/tension roller drives. Servo motors and drives provide precise control of position, velocity and acceleration, while reducing maintenance issues associated with traditional drive components such as clutches, brakes, V-belts, etc. In order to provide real time CPU control over the servo functions, the control system

employs a processor such as the Intel 80C196NP processor. The control system also includes servo motor circuits and I/O circuits to control machine functions.

A feed/tension system of the present strapping machine employs closed loop control. By comparing signals output from a feed/tension encoder with pinch roller proximity sensor data, the relative slip between pinch and drive rollers can be detected. This data is used in two modes: (1) a feed mode to detect short feeds where the strap fails to thread its way through the track; and (2) a tension mode to detect when primary tensioning of the strap about a bundle is complete.

In the feed mode, the feed/tension servo motor feeds the strap through a track for a predetermined number of encoder pulses. During the feeding operation, the encoder pulses are continually compared against the pinch roller proximity sensor pulses. A significant variation in this position tracking indicates slippage between the drive and pinch rollers indicating a short feed condition. When a short feed condition is detected, the strap is retracted to the strap sensor lever area where a "retry" sequence resets the encoder and proximity sensor data. The feed sequence can again be attempted several times as determined by the control system.

In the primary tension mode, the feed/tension servo motor retracts the strap for either a predetermined number of encoder pulses in a loop size control mode for predetermined bundle sizes, or to a point where the tension drive roller begins to slip on the strap. When strapping highly compressible packages, the control system can alter the sealing head speed to allow more time for the drive roller to fully tension the strap.

The present strapping machine also employs closed loop mechanical secondary tension initiated by a bundle height sensor or operator input. By tracking the sealing head and feed/tension pinch roller positions, the mechanical secondary tension sequence can be initiated at the appropriate time in the strapping cycle. The secondary tension system preferably is cam driven based on a secondary tensioning cam positioned coaxially with the remaining cams of the system on a common drive shaft. The control system can monitor the position of the strap under primary tension, and

speed, or slow, the rotation of the common shaft, so that secondary tensioning is applied at the appropriate time.

These and other benefits of the present invention will become apparent to those skilled in the art based on the following detailed description.

BRIEF DESCRIPTION OF THE DRAWINGS

Figure 1 is a front elevational view and partial fragmentary view of a strapping machine embodying the present invention.

Figure 2A is a top plan view of a strap dispenser for use by the strapping device of Figure 1.

Figure 2B is a top front isometric view of a strap dispenser for use by the strapping device of Figure 1.

Figure 3 is a block diagram of a control system for use by the strapping device of Figure 1.

Figure 4A is a top plan view of a strap accumulator for use by the strapping device of Figure 1.

Figure 4B is a front elevational view of the strap accumulator of Figure 4A.

Figure 4C is an exploded isometric view of the strap accumulator of Figure 4A.

Figure 5A is a top plan view of a strap feed/tension unit for use by the strapping device of Figure 1.

Figure 5B is a front elevational view of the feed/tension unit of Figure 5A.

Figure 5C is an exploded isometric view of the feed/tension unit of Figure 5A.

Figure 6A is a top plan view of a secondary tension unit for use by the strapping device of Figure 1.

Figure 6B is a front elevational view of the secondary tension unit of Figure 6A.

Figure 6C is an exploded isometric view of the secondary tension unit of Figure 6A.

Figure 6D is a top plan view of an alternative embodiment of the secondary tension unit of Figure 6A.

Figure 6E is a front elevational view of the alternative embodiment of the secondary tension unit of Figure 6D.

Figure 6F is an exploded isometric view of the alternative embodiment of the secondary tension unit of Figure 6D.

Figure 7A is a front elevational view of a portion of the secondary tension unit of Figure 6A showing a high tension position.

Figure 7B is a front elevational view of a portion of the secondary tension unit of Figure 6A showing a high tensioning disabled position.

Figure 7C is a front elevational view of a portion of the secondary tension unit of Figure 6A showing a home position.

Figure 7D is a front elevational view of a portion of the alternative embodiment of the secondary tension unit of Figure 6D showing the high tension position.

Figure 7E is a front elevational view of a portion of the alternative embodiment of the secondary tension unit of Figure 6D showing the high tensioning disabled position.

Figure 7F is a front elevational view of a portion of the alternative embodiment of the secondary tension unit of Figure 6D showing the home position.

Figure 8A is a front elevational, and partial fragmentary, view of a track for use by the strapping device of Figure 1.

Figure 8B is a cross-sectional view of the track of Figure 8A, taken along the line 8B-8B.

Figure 8C is an exploded isometric view of the track of Figure 8A.

Figure 9A is a top plan view of a sealing head for use by the strapping device of Figure 1.

Figure 9B is a cross sectional view of the sealing head of Figure 9A taken along the line 9B-9B.

Figure 9C is an exploded isometric view of the sealing head of Figure 9A.

Figure 10A is a top plan view of a main drive system for the strapping device of Figure 1.

Figure 10B is a front elevational view of the main drive of Figure 10A.

Figure 11 is a schematic cam timing sequence.

Figures 12A-12B are flowchart diagrams that together show the steps of a basic, exemplary routine performed by the control system of Figure 3.

Figure 12C is a flowchart diagram that shows the steps of a basic, exemplary load routine performed by the control system of Figure 3.

Figure 12D is a flowchart diagram that shows the steps of a basic, exemplary strap retract routine performed by the control system of Figure 3.

Figure 13 is a plot of time and encoder pulses versus revolutions per minute of a feed and tension motor and pinch roller of the feed/tension unit of Figure 5A and the sealing head of Figure 9A.

DETAILED DESCRIPTION OF THE INVENTION

A machine for manipulating flexible tape-type material, and in particular, an apparatus and method for providing primary and secondary tensioning in a strapping machine, is described in detail herein. In the following description, numerous specific details are set forth such as specific components, arrangement and coupling of such components, etc., in order to provide a thorough understanding of the present invention. One skilled in the relevant art, however, will readily recognize that aspects of the present invention can be practiced without certain specific details, or with other components, coupling elements, etc. In other instances, well-known structures are not described in detail in order to avoid obscuring the present invention.

Referring to Figure 1, a strapping system or machine 10 comprises the following major components, all mounted to a housing or frame 10′: a dispenser

unit 11, an accumulator unit 12, a feed and tension unit 13, a track unit 14, a secondary tension unit 15, a sealing head unit 16, and a control system 200. The basic operation of the machine involves paying off strap from a strap coil mounted on the dispenser 11 and feeding the free strap end through the accumulator 12, feed and tension unit 13, sealing head 16 and track 14. After the strap has been fed around the track 14 and back into the sealing head 16 the strapping cycle can begin. The strapping cycle is controlled by a series of sealing head cams performing the strap application functions in a single rotation of a common shaft and cams of the sealing head 16, as described in more detail below.

The overall operation of the system 10 will first be described, and thereafter, the individual components will be described in detail. The strapping cycle begins with a right hand gripper 148 (Figure 9C) gripping the free end of the strap against a cover slide 153 (Figure 9C). A track guide 132 is mechanically opened and the strap is pulled from the track guide 132 (Figure 8B) as the strap is drawn around the package by a feed/tension motor 126 (Figure 5) in the primary tensioning sequence.

As this primary tensioning process is completed, the sealing head 16 continues to rotate and additional strap tension is applied by the secondary tension unit 15. As the secondary tensioning process is completed, a left hand gripper 149 (Figure 9C) grips the supply side of the strap against the cover slide 153. The overlapping strap sections are pressed together by a press platen 152, heated by a heater blade 150 and severed from the supply by a strap cutter 154 (all shown in Figure 9C). Next, the heater blade is withdrawn from the strap seal area. The sealing head 16 continues to rotate allowing the press platen 152 to press and seal the overlapping strap sections.

During the sealing cycle, the strap path through the sealing head 16 is once again aligned and the feeding sequence can begin. The sealing head 16 continues to rotate allowing the seal to cool while the feeding sequence continues. At the end of the strapping cycle, the cover slide 153 opens, the sealed strap is released and the cover slide returns to the closed position. The strap continues to feed until the free end

reaches the sealing head 16 once again. After the feed sequence has been completed, the machine is then ready to apply another strap.

Two operational modes are available: (1) manual, and (2) automatic. The manual mode allows straps to be applied by the operator primarily for off line strapping operations and maintenance testing. In the automatic mode, the machine is mated to upstream infeed equipment such as conveyors and the strapping cycle is initiated by a package sensor (not shown) located on the entry side of the system 10, which provides an upstream interlock signal indicating a package is being delivered to the system to initiate a strapping cycle.

Strap Dispenser Unit

Referring to Figures 2A and 2B, the dispenser 11 provides a mounting means for the coils of strapping material 20 (shown in broken lines) necessary for the strapping operation. The strapping system 10 preferably employs two dispensers 11, only one of which is shown in Figures 2A and 2B. The dispenser essentially comprises a shaft 17, with removable, axially mounted outer side plates 18, tangentially positioned strap exhausted switch 112, a non-contact low strap sensor 113 and guide rollers 111 and 151, and an axially mounted dispenser coil brake 110. The shaft is rotatably mounted onto the strapping system 10, proximate to the accumulator 12, by means of bearings 19, while the strap exhausted switch 112, coil brake 110 and non-contact low strap sensor 113 are electrically coupled to one of several inputs of the control system 200, as shown in Figure 3. Based on brake release signals supplied from the control system to the coil brake 110, the rotation of the bearing 19 mounted dispenser shaft 17 is controlled by the electrically operated brake, which is released by the control system as strap is demanded by the machine. The dispenser brake 110 is preferably a conventional spring actuated type that is engaged in the absence of an electrical signal. The control system releases the brake each time an accumulator motor 122 (Figure 4A) is energized to fill a depleted accumulator 12 section. When the control system 200 de-energizes the accumulator motor 122, the dispenser brake 110 is once again engaged.

The strapping material 20 is supplied on a core mounted coil (not shown) that is loaded onto the shaft 17 by removing the outer side plate 18, placing the coil on a

dispenser mandrel 24 and replacing the side plate 18. To load the strap 20, the machine 10 must be in a load mode (described below) that allows the accumulator to run and accept the strap. The loose or free end of the strap coil is threaded, by hand, around the guide roller 111, through the strap exhausted switch 112, around the second guide roller 151, and into an accumulator upper guide 117 where it is seized by the rotating accumulator rollers 114 and 115 (Figure 4B).

The non-contact low strap sensor 113 monitors the coil diameter and provides a control system signal when the coil is nearing depletion. The non-contact low strap sensor employs an optical transducer positioned tangentially along a path with respect to the dispenser mandrel 24 so as to receive light reflected from the strapping material 20. However, when a sufficient amount of strapping material has left the dispenser 11 so that the reduced diameter of strapping material causes the tangentially mounted optical transducer to fail to reflect off the strap coil diameter, the low strap sensor 113 providing a low strap signal to the control system 200. When this signal is received, the control system illuminates a low strap light (not shown) alerting the operator of the low strap condition.

The strap exhausted switch 112 provides a depleted signal to the control system 200 indicating which of the two dispensers 11 (upper or lower) is currently in use, and whether or not the strap coil has been depleted. Once the depleted signal is received, the control system 200 provides an audible alarm that alerts the operator and retracts the strap from the accumulator unit 12. Thereafter, the control system 200 causes the machine to enter an automatic loading ready sequence.

Assuming that the lower dispenser 11 has depleted its strap, and after the machine 10 has completed the above strap depleted sequence, the loose end of the strap coil from the upper dispenser is fed by hand through the same path as the lower strap coil, except that the threading of the strap exhausted switch 112 will now be routed below the guide roller 111 indicating the upper coil is the active coil. The two position switch provides a first signal to the control system 200 when an actuating lever of the switch is in a first position, indicating that the lower coil is active, and a second position, pivotally displaced from the first position, indicating that the upper coil is

active. By threading the strap through one of the two positions, the strap exhausted switch 112 actuating lever is pivotally positioned in the first or second position, providing an appropriate signal to the control system 200. Such a two coil system allows the operator to replace the depleted lower coil while the machine continues to run.

Strap Accumulator Unit

Referring now to the accumulator 12 shown in Figures 4A-4C, the accumulator provides a reservoir of the strap 20 for the strapping operation and the mechanisms necessary for automatic strap loading after the strap has been depleted on one of the two dispensers 11. The accumulator 12 essentially comprises the following elements: a spring 165 that biases a pinch roller 114, a motor driven roller 115, an accumulating chamber window 116, strap guides 117 and 118, an accumulator door 119 with an integral strap guide slot 30, a strap sensor lever 120 and a rear mounting plate 118′ to which the elements are secured. The accumulator 12 has three general modes of operation: (1) a load mode, (2) a strapping mode, and (3) a retract mode.

In the load mode, strap is hand fed into the accumulator pinch and drive rollers 114 and 115 respectively from the dispenser 11. The pinch roller 114 is rotatably mounted to an eccentric shaft 174, where the eccentric shaft is mounted at one end of a pinch roller lever 175. The pinch roller 114 is loaded into or biased against the drive roller 115 by a spring 165, which is fixed at the free end of the pinch roller lever. To start the load sequence, the operator presses a load pushbutton (not shown) located in the dispenser area. Once the control system 200, in response thereto, starts the load sequence, the control system energizes an accumulator motor 122 that rotates the motor driven roller 115 to cause the strap 20 to be drawn into the accumulator 12 by the rotating pinch and drive rollers 114 and 115. The strap is guided by the upper and lower strap guides 117 and 118 respectively into a lower section of the accumulator 12 and then guided by a guide 30 in the accumulator door 119 into the feed/tension roller 13 section.

During the loading sequence the control system 200 provides a door closure signal to an accumulator door solenoid 121 to retract a hook-ended lever 119′ that holds the accumulator door 119 closed. By holding the accumulator door 119 closed, the strap 20 is confined to the guide slot 30 in the accumulator door 119 and is guided into feed/tension rollers 127 and 129 (Figure 5B). After the strap has fed through the feed/tension rollers 127 and 129 and into a feed tube 169 (Figure 5A), a strap sensor 166 (Figure 5B), coupled to the control system 200 and a strap sensor lever 168, detects the movement of the strap sensor lever. The strap sensor lever 168, which is located on the feed tube 169, provides strap detection signals to the control system 200 when the strap has fed past the feed/tension rollers 127 and 129, indicating that the machine can enter the strapping mode. As explained below with respect to Figures 5A-5C, the strap sensor lever is preferably pivoted about the strap sensor so that the free end of the lever is pivotally displaced by the strap moving through the feed tube. In response thereto, the strap sensor, preferably an inductive proximity sensor, outputs the strap detection signal to the control system to indicate that the strap has been properly fed through the accumulator 12 and feed/tension unit 13.

In the strapping mode, the control system 200 releases the accumulator door solenoid 121, which allows the spring-loaded accumulator door 119 to retract allowing the strap to move out of the guide slot 30 in the door and into a main accumulator chamber 116′′ formed by the window 116, a leftward portion of the rear mounting plate 118′, and spacers 116′ positioned therebetween. The window 116 and door 119 are transparent to allow the operator to view the strap 20 (not shown in Figure 4C) within the accumulator unit 12. The control system signals the accumulator motor 122 to continue to run and fill the accumulator chamber 116′′ with strap until there is sufficient strap to provide a downward weighting force that depresses the pivotally mounted strap sensor lever 120 from a rest to a full position. After the strap sensor lever 120 is fully depressed, an accumulator back plate mounted hall effect sensor 123 detects a magnet 124 mounted on a proximate end of the wand 120. The hall effect sensor 123 is coupled to and provides a strap full signal to the control system 200 indicating that the accumulator chamber 116′′ is full. After the accumulator chamber

116'' has filled, the control system 200 provides a de-energizing signal to the accumulator motor 122 and the machine 10 is then ready for the automatic feed sequence described below with respect to the feed/tension unit.

The retract mode is controlled automatically and is used to clear the machine 10 of a piece of previously depleted strap 20, thereby enabling the machine to be easily loaded. After the strap exhausted switch 112 on the dispenser 11 (Figure 2) detects a depleted coil and sends an appropriate strap exhausted signal to the control system 200, the control system causes the accumulator motor 122 to stop. Strap is then supplied from the accumulator chamber 116'' until the hall effect sensor 123 fails to detect the magnet 124, indicating that the accumulator chamber 116'' is not full. In response to the not full signal from the hall effect sensor 123, concurrently with the strap exhausted signal from the strap exhausted switch 112, the control system 200 provides a reverse signal to the accumulator motor 122 and a feed and tension unit motor 126 (discussed below), which ejects the remaining strap in the accumulator 12 from the machine. At this time, the control system 200 returns the machine 10 to the load mode and the strap, from the previously loaded coil, can be threaded through the strap exhausted switch 112 into the accumulator rollers 114 and 115, thus beginning another load sequence.

Feed and Tension Unit

Referring now to Figures 5A-5C, the feed and tension unit 13 provides a means for feeding the strap around the track 14 and provides primary tension during the tensioning sequence. The feed and tension unit 13 comprises a brushless DC servo motor 126 that drives a driven roller 127 against a solenoid loaded pinch roller 129, which is equipped with inductive proximity sensors 130. A feed tube 169 that receives the strap 20 is equipped with the strap sensor 166, as noted above. The servo motor 126 is equipped with a digital encoder 179 that provides closed loop control signals to the control system 200 to monitor position, speed and acceleration of the drive roller 127.

The pinch roller 129 is selectively loaded by the solenoid 128 using a pinch lever 167 coupled to the solenoid at a first end and at a free end to an eccentric shaft 160. The pinch roller is rotatably mounted to a free end of the eccentric shaft so

that when the control system 200 provides energizing signals to the solenoid 128, the solenoid pivots the pinch lever 167 to cause the pinch roller 129 to be biased against the drive roller. As shown in Figure 3, the solenoid is controlled by a pulse width modulation (PWM) circuit providing a variable force to the pinch roller 129, and thus a variable pinch force on the strap 20 for the various modes of operation discussed herein.

Inductive proximity sensors 130 are used to provide quadrature tracking signals to the control system 200, which monitors strap position and response with respect to the drive roller rotation. The tracking signals provide closed loop tension control by allowing the control system to compare the signals from the feed/tension encoder 179 to the proximity sensors 130 information, as described below. The proximity sensors 130 and digital encoder 179 preferably employ conventional quadrature encoding, each using pairs of sensors, so that both magnitude and direction of rotation of the drive and pinch rollers can be detected by the control system 200. While the proximity sensors 130 are inductive encoders that detect the varying magnetic flux caused by the rotation of a plurality of radially positioned holes placed around the edge of the pinch roller 129, other encoding methods can be employed, as are known by those skilled in the art, such as optical encoding, brushed or brushless electrical encoding, etc.

The feed and tension unit 13 has three modes of operation: (1) load mode, (2) primary tension mode, and (3) feed mode. During the load mode, the strap 20 is fed by the accumulator rollers 114 and 115 into the feed/tension rollers 127 and 129 where the strap is picked up and driven to the strap sensor lever 168 located in the feed tube 169. After the strap has reached the strap sensor lever 168, the sensor lever is pivotally displaced by the strap to cause the strap sensor 166 to provide the strap detect signal to the control system 200. In response thereto, the control system 200 pauses the feed sequence and de-energizes the accumulator solenoid 121 which releases the accumulator door 119, allowing the accumulator chamber 116'' to fill with strap (Figure 4B). During the filling sequence, the control system 200 establishes a zero point for the feed/tension motor 126 by advancing the strap slowly to the lever 168 and stopping when the sensor 166 initially activates to send the strap detect signal to the

control unit 200. When the lever 168 is first displaced and the strap detect sensor 166 first provides a strap detect signal to the control system, the control system establishes a zero point that is used to accurately determine the position of the strap despite future slippage between the drive and pinch rollers. Detecting initial actuation of the sensor 166 occurs only during each retry or during the loading sequence.

After the strap 20 has filled the accumulator chamber 116'', and the hall effect sensor 123 provides a strap full signal to the control system 200, the control system provides a fast forward signal to the feed/tension motor 126 that rapidly advances the strap through the feed tube 169 and sealing head 16 (Figure 9C), around the track 14 (Figure 8B) and finally back into the sealing head. During this time, the control system 200 provides a light force to the pinch roller solenoid 128 to maintain a light force between the feed/tension rollers 127 and 129 while the control system monitors the rollers to ensure both rollers are rotating at the same surface speed. This ensures that, if the strap 20 does not complete the feed, the strap will not be damaged by the feed/tension rollers 127 and 129 before the feeding sequence can be terminated. If the control system 200 senses a speed differential between the digital encoder 179 and inductive proximity sensors 130, the feeding sequence is immediately terminated and the control system initiates another homing sequence and establishes another zero point. After the homing sequence has been completed, another feed sequence is attempted. This homing and feed sequence can be repeated several times as determined by the control system. If the control system has repeated the homing and feed sequences a predetermined number of times without success, then the control system provides an error signal to the operator, who must manually feed the strap or determine and correct a problem in the machine. When the control system 200 successfully completes a feed sequence, the machine is ready for the normal strapping operation.

In the primary tension mode of normal strapping operation, straps can be applied to packages either in the manual or automatic mode described above. Two tensioning sequences are available in the primary tension mode: (1) loop size control mode, and (2) tension mode. These modes can be automatically selected by package height sensors (not shown) that are upstream side of the machine, and which provide

height signals to the control system 200. Alternatively, these modes are selected from the machine's touch screen control panel (not shown) by the operator. The machine 10 can also employ a combination of the two modes. The control system 200 begins the primary tension mode by rotating the sealing head 16 (Figure 9C) to engage a right hand gripper 148 which grasps the loose end of the strap. As the sealing head 16 continues to rotate, the track guide 132 (Figure 8C) is opened, the strap is released from a track guide, and the tensioning sequence begins. During the tensioning sequence, the strap is drawn down rapidly around the package as explained below.

In the loop size control mode, the control system 200 draws the strap 20 down to a predetermined loop size by monitoring the pulse signals from the feed/tension encoder 179 and/or proximity sensors 130. When the control system has received a predetermined number of pulses from the proximity sensors 130, the control system decelerates the feed/tension motor 126 to a controlled stop. The control system 200, however, causes the sealing head 16 to continue to rotate and the feed/tension motor 126 to continue to hold its position until a left hand gripper 149, in the sealing head 16, secures the strap end being tensioned based on the position of a left hand gripper cam and follower (discussed below).

In the tension mode, the strap 20 is drawn tight around the bundle or package until the motor driven roller 127 begins to slip on the surface of the strap. The pinch roller 129, conversely, maintains contact with the strap and is an indicator of strap position and velocity. The control system 200 detects this slippage from the differential in signals between the feed/tension encoder signals and the pinch roller proximity sensors signals. After the control system detects a predetermined differential set point between the signals, the control system decelerates the feed/tension motor 126 and increases the pinch solenoid 128 force through the PWM circuit. In response thereto, the feed/tension motor 126 continues to tension the strap, at a slower speed, to a predetermined force where the feed/tension motor 126 maintains tension on the strap. If the high tension mode has been selected, the high or secondary tension unit 15 will apply final tension to the strap, as described below, before the sealing operation takes place. After the left hand strap end has been secured, strap tension is released before the

cutting/sealing operation to prevent strap splitting during the cutting operation. The sealing head 16 continues to rotate through the tensioning sequence and into the cutting/sealing sequence as described below.

During the feed mode, which occurs after the strap cutting/sealing sequence begins, the feed/tension motor 126 begins the feeding sequence which continues throughout the sealing operation. At the end of the sealing head rotation, the sealing head cover slide 153 retracts, releases the strap onto the package and returns to its original closed position.

During the sealing cycle, the control system 200 continues to feed the strap around the track 14 until it enters the sealing head 16 on the second pass, coming to rest just past the sealing press platen 152 (Figure 9C). The control system 200 monitors the length of strap dispensed in the feed mode by monitoring signals from the encoder 179. After a predetermined number of encoder pulses have been received by the control system, the feed/tension motor 126 is decelerated and stopped at the appropriate location. The termination of the feed sequence completes the strap application cycle and the machine is now ready to apply another strap.

Figure 13 shows an exemplary plot of time and encoder pulses versus revolutions per minute of a feed and tension motor and pinch roller of the feed/tension unit of Figure 5A and the sealing head of Figure 9A. The sealing head curve begins rotation and accelerates as its revolutions per minute versus time increases, until the sealing head plateaus at a constant velocity, and thereafter decelerates. During the initial acceleration of the sealing head, the feed/tension motor 126 and pinch roller 129 rapidly accelerate to a peak velocity of about 4,000 revolutions per minute. At about 210 milliseconds (about 48,000 encoder pulses) the feed/tension motor 126 experiences slippage with respect to the strap. Under the exemplary curves of Figure 13, a small diameter track unit 14 is employed to provide straps around small bundles. As a result, the machine 10 is operated primarily in the loop size control mode. Therefore, the feed/tension motor 126 is, at this time, decelerated. Approximately 65 milliseconds later, the feed/tension motor 126 stops. Alternatively, if the machine 10 were operated at a slower strapping rate, with a larger track diameter sizes, with larger bundles, etc.,

the control system 200 can initiate deceleration of the feed/tension motor 126 at the initial detection of slippage in the strap (about 210 milliseconds). At approximately 504 milliseconds, the control system 200 reenergizes the feed/tension motor 126 and pinch roller 129 to begin feeding strap through the track unit 14 for the next strapping operation, while the sealing head completes the current strapping operation and is decelerating.

Track Unit

Referring to Figures 8A-8C, the track 14 includes a track guide 132, which has a slot 132′ that guides the strap 20 to form a large loop, starting with the first pass through the sealing head 16 and ending again in the sealing head 16 on the second pass. The track guide 132 retains the strap until the next strapping cycle is initiated. The track essentially comprises: (1) the strap guide 132 whose slot 132′ is preferably made of a low friction material, (2) track support blocks 133 with integral linear bearing assemblies 133′, (3) a track opening linkage 134, (4) a track cover 135, and (5) four cover mounted strap stripper pins 136.

The track guide 132 is secured at a lower end to the track support blocks 133, which are slideably moveable with respect to the cover 135, by means of the bearing assemblies 133′. The track opening linkage 134 is secured to an underside of the track support blocks 133, and is operably coupled to a track cam 131 (Figure 9C), so that as the track cam moves, the linkage, track support blocks, and track guide are laterally displaced with respect to the cover 135.

The four stripper pins 136 are fixed to the track cover 135 at a periphery of four opposite points from the track guide 132, by means of track pin support assemblies 136′. The track pin support assemblies 136′ retain the track pins 136 within holes in the track guide, whereby in a first position when the track guide rests against the track cover, the pins extend only partially within the track guide (as shown in Figure 8A). However, in a second position, when the track guide is laterally displaced from the track cover, the pins extend within and through the holes, into the slot 132′ to push the strap 20 from the slot.

During the strapping cycle, a track cam 131 in the sealing head 16 (Figure 9C) actuates the track opening linkage 134 to laterally displace the track guide 132 with respect to the track cover 135, while simultaneously stripping the strap from the track guide 132 by the stripper pins 136 mounted to the track cover. The track guide 132 remains laterally displaced from the track cover or "open" until the sealing cycle begins when it closes again for another strap feed sequence. The track guide 132 remains closed throughout the rest of the cycle until another strapping cycle begins.

A guide track 134′ affixed to a top of one of the track blocks 133, provides a tapering slot from the feed/tension unit 13 to an entry point of the track guide 132 to facilitate entry of the free end of the strap 20 during each feed sequence. A brush unit 135′ is mounted to the track cover 135 and includes an elongated brush, consisting of a plurality of bristles extending parallel to one of the two vertical sides of the track guide 132, adjacent to and within the interior of the track guide. When the track guide 132 opens, the strap rests against an exterior edge of the brush momentarily before being drawn down and about the object. As a result, the brush and the brush unit 135′ ensures that the strap does not twist as it is initially drawn about the object.

Secondary (High) Tension Unit

Referring to Figures 6A-6C, the secondary tension unit 15 provides final strap tension after the primary tension sequence has been completed. Secondary tension is not required on all packages and the secondary tension unit 15 is provided with a means for the control system 200 to disable it. The secondary tension unit 15 essentially comprises: (1) a sealing head main shaft mounted tension cam 137, (2) a cam driven tension arm 138, (3) a spring actuated tension roller 139, (4) a strap gripper 140, and (5) a pressure regulated pneumatic cylinder 190 that provides adjustable strap tension. As explained below, the tension cam 137 is mounted to the main shaft of the sealing head (Figure 9C), and controls the pivotal movement of the tension arm 138 by means of a cam follower roller 137′ mounted on the tension arm. A pivot assembly 138, secured to the housing frame of the machine 10, pivotally retains the tension arm 138.

The tension roller 139 is rotatably received by an upwardly extending roller slide 139′, which has a free end coupled to a free end of the tension arm 138. A non-laterally moveable roller 139′′, rotatably mounted to a series of plates, receives the strap 20 thereunder, where the strap then loops over the roller 139 before passing underneath a rounded guide block 139′′′. A hammer-shaped lever 146′ is pivotally attached at a first end. The free or "head" end of the lever 146′ is spring biased downward to rest against an upper surface of the tension roller 139 to help guide a free end of the strap 20 through the secondary tension unit 15 during initial loading of the strap. During strapping operations, the lever 146′ rests against an upper surface of the strap and biases a loop of the strap downwardly within the secondary tension unit 15, to restrict movement of the strap vertically. A gripper linkage 140′ pivotally receives the strap gripper 140 at one end, whereby the gripper linkage 140′ is pivotally coupled at its free end to an L-shaped block 195.. A gripper actuator linkage 144 includes an actuating arm 144′ that is pivotally coupled at a first end to a frame of the machine 10 or a stable portion of the accumulator unit 12. A free end of the actuating arm 144′ is coupled to the gripper linkage 140′ and provides an upward actuating force on the gripper linkage, as described below.

In the home position of the tension arm 138 (Figure 7C), the tension arm 138 is downwardly displaced, which downwardly displaces a hammer-shaped cylinder eye 191 that is coupled to a cylinder rod 193 of the pneumatic cylinder 190. A lower surface of tension arm 139 rests against an upper surface 191′ of the cylinder eye 191. An L-shaped bracket 194 is adjustably coupled to a side of the cylinder eye 191, and a free end of the L-shaped bracket hooks over and rests upon an upper surface of the L-shaped block 195. As a result, when the tension arm downwardly displaces the cylinder eye 191, the L-shaped block 195, the gripper linkage 140′ and the gripper 140 are similarly downwardly displaced. In the high tension position, however (Figure 7A), a spring 146 upwardly displaces the tension arm 138 so that it does not rest against the upper surface 191′ of the cylinder eye 191. As a result, the gripper linkage 140′ and gripper 140 are displaced upwardly, forcing the gripper 140 upwardly against the strap and guide block 139′′′. The underside of the guide block 139′′′ can include

teeth or other surface deformations so that the guide block 139′′′, in addition to the teeth of the strap gripper 140, secure the strap therebetween.

The gripper 140 is pivotally mounted to the gripper linkage 140′ allowing the gripper teeth to remain parallel and mesh with the teeth on the undersurface of guide block 139′′′, thereby ensuring a proper gripping action. One or more gripper springs 145 coupled between the gripper actuator linkage 144, and a stationary portion of the machine 10, provide an upward spring force to the actuating arm 144′ and gripper linkage 140′, whereby the spring force controls the amount of force supplied by the strap gripper. As a result, the strap is positively locked between the guide block 139′′ and strap gripper 140 prior to high tensioning.

In operation, after the primary tension sequence has been completed, the sealing head 16 continues to rotate as the tension cam 137 actuates the tension arm 138. With secondary tension enabled, the strap gripper 140 anchors the strap 20 against the underside of the guide block 139′′′, during the tension arm 138 movement, to prevent any lengths of strap from being drawn from the accumulator 12. As the tension arm 138 moves through its travel from its home position (Figure 7C) to the high tension position (Figure 7A), the pneumatic cylinder 190 is released to provide an upward force, allowing the roller 139 to tension the strap to the force capability of the pneumatic cylinder. The control system 200 can control an amount of force supplied by the pneumatic cylinder 190. The pneumatic cylinder 190 provides a higher force capability and a constant force, as opposed to an alternative embodiment, described below, which employs a spring.

The pneumatic cylinder 190 includes an electrically operable control valve that is electrically coupled to the control system 200. The valve preferably is a two-position valve whereby a first signal from the control system 200 (such as a power-up or energizing signal) causes a cylinder rod 193 to extend outwardly from the pneumatic cylinder. In response to a second (inhibit) signal (such as a power-off or deenergizing signal), the cylinder rod retracts. When the control system 200 supplies the inhibit signal to the pneumatic cylinder 190, the control valve is actuated and the pneumatic cylinder 190 draws the arm 144 downwardly. The force set point of the

pneumatic cylinder 190 can also be adjustable by the operator for the particular product being strapped. An air pressure regulator for controlling the cylinder output force (not shown), is provided in the machine 10, where the regulator is manually adjustable to provide variable secondary strap tension. Alternatively, the regulator is electrically coupled to, and controlled by, the control system 200 so that the control system adjusts the tension force. Overall, the pneumatic cylinder 190 acts as a constant force spring during each strapping cycle. The pneumatic cylinder is clevis mounted to the base frame of the machine 10 and pivotally mounted to the roller slide 139′ via the eye of the cylinder eye 191, and spherical bearing 192 secured thereto, which together is mounted as a unit to the cylinder rod 193.

Since the tension arm 138 is cam 137 actuated, the arm 138 travels full stroke each cycle. As with other cam actuated members in the machine 10, the tension arm does not snap back under any uncontrolled spring action. Contact with the tension cam 137 is maintained by the tension arm return spring 146 coupled between the tension arm and the frame of the machine 10, or a secure location on the feed/tension unit 13 regardless of the strap tension applied. As shown in the cam timing diagram of Figure 11, after the tension arm 138 has traveled full stroke, it dwells for a short time in the fully extended position (Figure 7A) allowing the left hand gripper 149 (Figure 9C) to secure the strap 20 prior to releasing strap tension. The sealing head 16 continues to rotate and the tension arm 138 returns to its home position, releasing the strap tension prior to the cutting operation, as described below.

In an alternative embodiment to the pneumatic cylinder 190, shown in Figures 6D-6F and 7D-7F, a spring-loaded secondary tension unit and electrically controlled inhibit system can be employed. The alternative embodiment is substantially similar to the previously described embodiment, and only significant differences in operation or construction are described in detail. For example, a gripper holder 140′′ is pivotally received at the one end of the gripper linkage 140′, where the gripper holder receives the strap gripper 140 therein. In the home position of the tension arm 138 (Figure 7F), the tension arm is downwardly displaced, which similarly downwardly displaces the actuating arm 144′, which is pivotally coupled at its free end to the tension

arm. In the high tension position, however, (Figure 7D), the tension arm 138, actuating arm 144′, gripper 140, gripper holder 140′′, and gripper linkage 140′ are displaced upwardly, to cause the first end of the gripper shaft to slide against an underside of the guide block 139′′′ and pivot downwardly to force the strap gripper 140 upwardly against the strap and underside of the guide block. The gripper spring 145 is coupled between a stationary frame member 145′ and the actuating arm 144′.

The force set point of a spring 142 is mechanically adjustable by the operator for the particular product being strapped. An adjustment knob 172, which operates a tension adjustment linkage 173, is provided on the exterior of the machine for easy access. A pivot assembly 182 receives a first end of the tension spring 142, and is pivotally retained at the free end of the tension arm 138. A shaft or bolt 183 extends through the free end of the tension spring 142, and both the spring and bolt are positioned within a spring tube 142′. An end of the bolt 183 rests against an upper first end of a pivotally secured tension adjustment arm 180. A first end of a rod 181 is coupled through a linkage 181′ to a roller 180′. The roller 180′ rests on an upper edge of the adjustment arm 180, opposite the bolt 183 and pivot point of the adjustment arm. A free end of the rod 181 is selectively, manually positionable by rotating the tension knob 172, which in turn drives a threaded linkage 172′ coupled to the free end of the rod 181. When the operator rotates the knob 172, the threaded linkage 172′, a portion of which is coupled to the frame of the machine 10, similarly rotates to pivot the rod 181 and cause the roller 180′ to move from a high force or tension position (shown in Figure 6F) to a low tension position which is proximate to the pivot point.

An inhibit solenoid 141 couples through a pivotal linkage mechanism 143′ to a first end of an inhibit lever 143. A free end of the inhibit lever 143 rests against an upper surface of the actuating arm 144′ of the gripper actuator linkage 144. As a result, when the control system 200 supplies an inhibit signal to the solenoid 141, it distends to cause the inhibit lever 143 to pivot to displace downwardly the arm 144′, and thereby inhibit the gripper linkage 140′ and strap gripper 140 to move upwardly against the strap, despite movement of the tension arm 138.

Secondary tension is often inhibited where the high strap tension produced by the secondary tension unit 15 will damage the package being strapped. This mode is either selected manually via the operator touchscreen, or automatically by package height detectors. In the automatic mode, the control system 200 can compare the height signal for a given package to a threshold, and if the height signal is below the threshold, the control system provides the inhibit signal to the pneumatic cylinder 190 or solenoid 141. As noted above, secondary tension is disabled by the inhibit signal. In this disabled mode, the tension arm 138 travels through its normal path, however, the tension unit strap gripper 140 is disabled by drawing down the gripper linkage 140′. As shown in Figure 7B, the pneumatic cylinder 190 in the first embodiment retracts the cylinder rod 193 to draw the cylinder eye 191, L-shaped bracket 194 and L-shaped block 195 downward and prevent the gripper linkage 140′ from applying upward force to the strap gripper 140.

The alternative embodiment operates similarly. As shown in Figure 7E, the solenoid 141 actuates the inhibit lever 143, preventing the actuating arm 144, pivotally mounted on the tension arm 138, from applying upward force to the strap gripper 140. When the control system 200 provides the inhibit signal to the solenoid 141, the solenoid pivots the inhibit lever 143 downward to prohibit the arm 144 from moving upward, thereby disabling the strap gripper 140.

With either embodiment, the tension arm 138 still moves upwardly, under the compression force of the pneumatic cylinder 190 or spring 142 and the tension force of springs 146 when the cam 147 rotates to the high tension position. As a result, the roller lever 139′, and thus the roller 139, still moves upwardly as the tension arm 138 similarly pivots upwardly. A short section of strap taken up by the tension roller 139 is drawn out of the accumulator 12 (rather than from around the package) when the tension roller moves upward. Consequently, the movement of the secondary tension arm 138 has no effect on the strap tension around the package. When the feeding cycle begins, the short section of strap left by the secondary tension roller 139 is easily pulled out and becomes part of the strap fed around the track guide 132 for the next strapping cycle.

Sealing Head Unit

Referring to Figures 9A-9C, the sealing head 16 performs the cutting and sealing operations in the strapping cycle. The sealing head 16 employs a brushless DC servo motor 147, which through a main drive reducer 176 and drive belt 177, rotates a sealing head mainshaft 125 (Figure 10). The rotation of the mainshaft 125, and thus the various cams of sealing head 16, is monitored by the control system 200 by means of a main drive digital encoder 178, a home position proximity switch 170 and proximity switch pickup 171, which are all electrically coupled to the control system. This encoder 178 and proximity switch 170 information is monitored by the control system to provide closed loop sealing head control, as explained below. The sealing head essentially comprises: (1) main shaft mounted cams, (2) right and left hand grippers 148 and 149 respectively, (3) the heater blade 150, (4) the press platen 152, and (5) the cover slide 153.

The sealing head cams are keyed to the main shaft to ensure that the relative cam positions are maintained. As the main shaft or sealing head 16 rotates, the cams operate and position the various mechanisms associated with the strap sealing operation. The cam timing diagram of Figure 11 illustrates the positions of the various cams, described below, and their resulting actuation of grippers, heating blade, and other elements of the sealing head 16.

The right and left hand grippers 148 and 149 are equipped with a series of teeth (shown in Figure 9A) and are operated by right hand and left hand gripper cams 157 and 158 respectively. The right and left hand grippers 148 and 149 secure the strap 20 during the cutting and sealing operation. In addition, the right hand gripper 148 is used to secure the free end of the strap during the primary and secondary tensioning sequences.

A heater cam 156 actuates the heater blade 150, where the blade is used to melt the surface of the overlapping strap sections which will form the seal. The control system 200 controls the heater blade temperature by a low voltage, high amperage PWM circuit 216 (Figure 3) energized when the machine power is on. The

control system 200 modulates the temperature of the heater blade by adjusting the frequency or length of the pulses supplied to the PWM circuit 216, as discussed herein.

A press platen 152, with its integrated strap cutter 154, is used to cut the free end of the strap from the supply and to press the strap ends, melted by the heater blade 150, together to form the seal. The cover slide 153 provides the surface that the press platen 152 bears against for the sealing operation. Additional details regarding the general operation of the sealing head can be found in U.S. Patent No. 4,120,239, incorporated herein by reference.

In operation, an initial rotation of the sealing head causes the right hand gripper cam 157 and right hand gripper follower 161 to allow the right hand gripper 148 to slide upwardly so that the gripper teeth of the right hand gripper engage the free end of the strap and retain it securely against corresponding teeth (not shown) on the underside of the cover slide 153. The sealing head mainshaft 125 continues to rotate and opens the strap track guide 132. As the track guide 132 opens, the strap is stripped from the track guide 132 by the stripper pins 136 located in each track corner. While the track is being opened, a slide cam 159 retracts an inner slide 155 and moves the press platen 152 and left hand gripper 149 away from the front of the sealing head 16. During the retracting of the inner slide 155, the press platen and left hand gripper cams 164 and 158 cause the press platen 152 and the left hand gripper 149 (by means of left hand gripper follower 149′) to drop down below a level of both the upper and lower strap sections. With the free end of the strap still retained by the right hand gripper 148 and the strap loop now free from the track guide 132, the primary tension sequence (described above) begins. The sealing head main shaft 125 continues to rotate and after the primary tension sequence has been completed, the tension cam 137 rotates to its high tension position and the secondary tension sequence begins as described above.

After the secondary tension sequence has been completed, the sealing head 16 continues to rotate and the heater cam 156 actuates the heater blade 150 to insert the blade between the upper and lower strap sections. During this time, the slide cam 159 moves the inner slide 155 again to the front of the sealing head 16, placing the press platen 152 and left hand gripper 149 under the strap sections in preparation for the

sealing sequence. Next, the left hand gripper cam 158, through the left hand gripper follower 149', actuates the left hand gripper 149 to its raised position to grip the left end of the strap loop. After the strap has been secured by the left and right hand grippers 148 and 149, a press platen cam 164 actuates the press platen 152 to its raised heat position to force the overlapping strap sections into the heater blade 150 for the heating cycle.

During this travel into the heat position, the cutter 154 mounted on the press platen 152, severs the strap from the supply using a shearing action between the cutter 154 and the right hand gripper face. The press platen 152 continues to travel upward into the heat position and forces the upper and lower strap ends into the heater blade 150. The strap ends are held in contact with the heater blade 150 for a period determined by the heater cam dwell and the sealing head 16 rotational speed. *See* Figure 11. After this dwell in the heat position, the sealing head 16 continues to rotate, the press platen 152 drops slightly from the sealing area, thereby allowing the heater blade 150 to be withdrawn based on the heater cam position. After the heater blade 150 has been withdrawn from the seal area, the press platen 152 again rises to force the melted strap ends together to seal the strap.

As shown in Figure 11, the sealing position of the press platen 152 is slightly higher than the heating position to account for the heater blade thickness. The press platen 152 maintains this position throughout the sealing cycle as the sealing head 16 continues to rotate. During the sealing operation, the strap path through the sealing head 16 is aligned such that the feed cycle, described above, can begin. The sealing head 16 continues to rotate to the end of the sealing cycle when the right and left hand grippers 148 and 149 and the press platen 152 drop slightly to release the upward load force on the underside of the cover slide 153. Next, the slide cam 159 actuates the cover slide 153 to open it, release the strap and closes again to start the next cycle. After the cover slide 153 closes, the strap concurrently being fed approaches the sealing head 16 to complete the feed. As the strap end enters the sealing head 16, the control feed/tension system 200 causes the motor 126 to decelerate to a predetermined and

controlled stop just past the press platen. The strapping cycle is now complete and is ready for another cycle.

Control System and Operational Routines

Referring to Figure 3, the control system 200 is shown in detail. As is known, mechanical machines are typically designed to apply a particular force over a particular duration. A great benefit achieved by the control system 200 is that forces and their application time are programmable. This control allows the machine to adapt and perform to specifications and requirements yet unknown. In addition, the substantial cost savings achieved by combining the functions of a programmable controller with the servo control make this machine concept feasible. The control system 200 essentially comprises: (1) a microprocessor 202, (2) a non-volatile flash memory 204, (3) RAM memory 206, (4) supervisory circuits 208, (5) digital inputs and outputs 210 and 212, (6) analog inputs and outputs 214 and 216, and (7) four special purpose microcontrollers 218 which control the servo motors. The control system also includes a clock circuit 220 that includes a real time clock and two timers, two encoder signal inputs 222, and three bi-directional serial ports 224. The various components 204-224 are coupled to the microprocessor 202 by means of a bus 226.

The microprocessor 202 used is preferably the 80C196NP manufactured by Intel Corporation. The 80C196NP microprocessor currently provides: (1) 25 MHz operation, (2) 1000 bytes of register RAM, (3) register-register architecture, (4) 32 I/O port pins, (5) 16 prioritized interrupt sources, (6) 4 external interrupt pins and non-maskable interrupt ("NMI") pin, (7) 2 flexible 16-bit timer/counters with quadrature counting capability, (8) 3 pulse-width modulated (PWM) outputs with high drive capability, (9) full-duplex serial port with dedicated baud-rate generator, (10) peripheral transaction server (PTS), and (11) an event processor array (EPA) with 4 high-speed capture/compare channels. The EPA is used to generate separate pulse width modulated signals controlling the strap pinch force and heater blade temperature, as described herein. The PTS is used to provide background counting and timing functions to appropriately time certain operations during each strapping cycle.

The non-volatile flash memory 204 can be re-programmed by the processor. The flash memory preferably is preprogrammed to contain a routine 300 that the microprocessor executes to perform the various operations described herein. The routine 300 is described in detail below with respect to the flowcharts of Figures 12A-12D. Importantly, by employing flash memory, the routine can be altered in the control system without the need to change component parts.

The supervisory circuits 208 provide a conventional watchdog timer and a conventional power fail detection circuit. The watchdog timer interrupts the processor 202 if the program does not periodically poll and reset the timer after a preselected time period. If the watchdog timer times out, then the watchdog timer will reset the processor, typically when a program or processor failure has occurred. The power fail detection allows the control system to detect a power failure and shut down the machine in an orderly fashion (*e.g.*, power down the heater blade 150).

The control system 200 preferably employs 32 digital inputs, 24 digital outputs, four analog inputs, four analog outputs, and two pulse width modulated outputs. The digital inputs and outputs 210 and 212 are conditioned (filtered) and optically isolated from the controller board using known opto-electric isolation circuits (not shown). The optical isolation limits voltage spikes and electrical noise often occurring in industrial environments. The strap exhaust switch 112, low strap sensor 26 , hall effect sensor 123, proximity sensors 130, strap sensor 166 and home position proximity switch 170 are coupled to the digital inputs 210. The coil brakes 110, accumulator door solenoid 121, and the inhibit solenoid 141 are coupled to the digital outputs 212. The main drive encoder 178 and feed/tension encoder 179 are coupled to the two inputs 222. The analog inputs 216 allow the controller board to use a wide variety of analog sensors such as photoelectric and ultrasonic measuring devices for applications having special requirements.

The bi-directional serial ports 224 allow the control system 200 to communicate with external equipment. For example, one of the control ports provides display information to the operator over a conventional display device, such as a touch sensitive LCD screen. A second communication port can couple the control system 200

to external diagnostic equipment. The third communication port can be coupled to a modem so that information can be exchanged between the control system and a remote location over telecommunication lines. Additionally, the control system 200 can be reprogrammed through one of the communication ports 224, by reprogramming the flash memory 204. While not shown, the control system 200 can also include amplifiers and filter circuits that amplify or condition the signals input to and output from the control system 200. For example, an amplifier can be employed between the PWM outputs 216 and the heater blade 150 to provide a high current signal to the heater blade.

The four microcontrollers 218 preferably are LM628 Motion Control chips manufactured National Semiconductor Corporation, which essentially are dedicated microprocessors. The microcontrollers 218 therefore responds to high level commands to control the servo motors. The control program or routine 300 (described below) determines the number of rotations, acceleration rate, and velocity. This information is transferred to the microcontrollers 218 which compute and execute a trapezoidal motion profile. As is known, a trapezoidal motion profile determines an initial increase in velocity to a constant terminal velocity, and thereafter a decrease in velocity for the servo motors employed by the machine 10. The microcontrollers 218 receive motor position feedback from the motor mounted digital encoders 178 and 179. The microcontrollers 218 then signal external power amplifiers (not shown) to apply the proper voltage and current to control motor operation. The microcontrollers 218 compare the current motor position with the desired position and then update the drive signal more than 3,000 times per second.

Referring now to the flowchart of Figures 12A-12B, the overall operation of the control system 200 with respect to the machine 10 will now be described. In order to begin a strapping cycle, the machine 10 must be loaded with the strapping material 20 as described previously. Therefore, in step 302, the processor 202 determines whether there is tape material 20 in the machine 10 by determining if the strap sensor 166 provides a strap present signal. If no strap is present, then in step 304,

the processor 202 performs the load sequence, described below with respect to Figure 12C.

If there is strap in the machine 10, then in step 306, the processor 202 determines whether the machine is either in the manual or automatic mode. The strapping cycle is started either by the operator pressing the start button in the manual mode under step 308 or by the package entering signal in the automatic mode (under step 310). In step 310, the processor 202 also can receive height signals from a height sensor or operator selection to determine if primary and/or secondary tensioning is to be applied to the particular package.

In response to either a start signal initiated by the operator, or an automatic start signal due to a package entering the track 14, the microprocessor 202 in step 312 activates the main drive servo motor 147 on the sealing head drive. The servo motor 147 begins to rotate the sealing head 16 according to a predetermined move sequence controlling acceleration and terminal velocity. In step 312, the processor 202 and one of the microcontrollers 218 control the servo motor 147 according to a predetermined motion profile. A typical strapping cycle includes not only the steps under the routine 300 of Figures 12A-12D, which are performed by the control system 200 of Figure 3, but also the various actuations of the left and right hand grippers, slide and platen movement, etc., under the timing diagram of 11, which are performed by the sealing head 16. To provide a full understanding of the operation of the machine 10, the steps of the routine 300 under Figures 12A-12D are described below in conjunction with the actuations performed by the sealing head 16 under the cam timing diagram of Figure 11. Therefore, as the sealing head 16 begins to rotate, the right hand gripper cam timing profile allows the right hand gripper follower 161 to release the gripper spring 162, causing the right hand gripper 148 to rise into position to grip the free end of the strap between the right hand gripper 148 and the cover slide 153. Also during this first sequence, the slide cam 159 pulls the inner slide 155 away from the sealing area in preparation for the tensioning sequence.

During the movement of the inner slide 155, the previously fed strap is stripped from the press platen 152 and left hand gripper 149 slots by the center

stripper 163. As the press platen 152 and left hand gripper 149 are pulled back, their respective cams cause them to drop down below the level of the strap being stripped away. This downward movement allows the press platen 152 and left hand gripper 149 to return underneath the two strap sections at the beginning of the sealing sequence.

Concurrently, the track cam 131 opens the track guide 132 and the strap is stripped from the track guide 132 by the track cover 135 mounted stripper pins 136. After the track guide 132 has opened, the microprocessor 202, under step 314, activates the feed/tension servo motor 126. The servo motor 126 begins to rapidly retract the strap according to a predetermined move sequence controlling acceleration and terminal velocity. In step 314, the microprocessor 202 also monitors the tension encoder pulses from the feed/tension encoder 179, and the proximity sensor signals from the proximity sensors 130.

In step 316, the processor 202 determines if the number of encoder pulses received from the feed/tension encoder 179 equal a predetermined value. As noted above, under the loop size control mode, the processor 60 draws the strap 20 down to a predetermined loop size by monitoring the pulse signals from the feed/tension encoder 179 and/or proximity sensors 130. When the microprocessor receives a predetermined number of pulses, then in step 318 the processor determines if primary tensioning has been enabled. If so, then the processor 202 determines whether a difference between the signals from the feed/tension encoder 179 and the signals from the proximity sensors 130 exceed a predetermined threshold. As the strap contacts the package, slippage occurs between the feed/tension drive roller 127 and the solenoid 128 loaded pinch roller 129. This slippage or speed differential is detected by the processor 202 as it monitors the feed/tension encoder 179 and the proximity sensors 130 at the pinch roller 129. After a predetermined speed differential is detected, the processor 202 in step 320 issues a motor command to decelerate and maintain its position. Alternatively, the processor 202 can omit step 318. As a result, the servo motor 126 retracts the strap 20 by a predetermined amount, such as under the loop size control mode discussed above. Step 318 can be omitted when, for example, the size of

the track 14 is small so as to provide a small loop of strap during each strapping cycle, when small bundles are strapped, etc.

During the primary tensioning sequence, the sealing head 16 has continued to rotate and after a time, determined by the sealing head 16 rotational speed, the secondary tension cam 137 moves the tension arm 138 through its path allowing the pneumatic cylinder 190 or spring-loaded tension roller 139 to apply final tension to the strap. In step 322, the processor 202 determines if secondary tensioning needs to be disabled based on either an input from the bundle height sensor or operator input. If secondary tension needs to be disabled, the processor 202 provides an inhibit signal to the pneumatic cylinder 190 to prevent the cylinder rod 193 from extending during secondary tensioning. However, if secondary tensioning has not been disabled, then in step 324, as the tension arm 138 begins to travel upward, the strap gripper 140 secures the strap as the gripper arm 144 and tension arm 138 move upward. The strap gripper 140 contacts the strap and anchors it during the secondary tension process, insuring the strap is tensioned around the strap rather than being pulled from the accumulator 12. During the tensioning process, the sealing head 16 continues to rotate and the heater cam 156 inserts the heater blade 150 between the upper and lower strap sections in preparation for the sealing operation.

As the secondary tension sequence is completed, the sealing head 16 continues to rotate and returns the press platen 152 and left hand gripper 149 to a position in front of the sealing head 16, underneath the upper and lower strap sections. While the sealing head 16 continues to rotate, the left hand gripper cam 158 raises the left hand gripper 149 into position to anchor the strap against the cover slide 153. After both strap ends have been secured, the tension cam 137 releases the secondary tension arm 138 ensuring the strap is not cut under tension.

The sealing head 16 continues to rotate and the press platen cam 164 forces the press platen 152 upward to thereby force the strap ends into the heater blade 150. As the press platen 152 travels upward, the press platen mounted cutter 154 provides a shearing action against the right hand gripper face severing the strap. As the heater blade 150 contacts the strap ends to seal them, the processor 202 in step 326 can

modulate the current applied to the heater blade 150 so that the blade provides sufficient heat to positively seal the strap ends, but not overheat them.

As the sealing head 16 continues to rotate, the press platen 152 continues to travel upward forcing the two strap sections into the heater blade 150 where they remain in contact for a period determined by the heater cam dwell. During this dwell, the strap sections in contact with the heater blade 150 are melted at the surface. Near the end of the dwell period, the press platen cam 164 causes the press platen 152 to drop slightly, allowing the heater cam 156 to withdraw the heater blade 150 from between the two strap sections.

After the heater blade 150 is clear of the sealing area, the press platen 152 again rises to press the two overlapping strap ends together to form the seal. The press platen cam 164 causes the press platen 152 to dwell in this position allowing the seal to cool. During this dwell period, a feed sequence for a succeeding strap cycle begins in step 327. To start the sequence, the processor 202 in step 327 issues a forward command to the feed/tension motor 126 to accelerate the motor to a terminal speed and push a predetermined amount of strap through the track guide 132 (the pinch solenoid 128 is engaged whenever power to the machine 10 is applied).

After the sealing process is complete, the left and right hand grippers and the press platen 152 drop down slightly, allowing the slide cam 159 to open the cover slide 153 and release the strap. The retained strap tension from the tensioning process causes the strap to be pulled upward and away from the sealing head 16. The slide cam 159 then returns the cover slide 153 to its closed/home position and the sealing head rotation stops. During the sealing sequence, the strap has continued to feed in step 327, thus preparing the machine 10 for the next strapping cycle. Shortly after the cover slide 153 reaches its closed/home position at the end of the strapping cycle, the free end of the strap again enters the sealing head 16 and stops just past the press platen 152.

In step 328, the processor 202 determines whether the strap accumulator 12 is low by monitoring the signals from the hall effect sensor 123. The determination as to whether the strap accumulator 12 is low is performed continuously, and

independent of the strapping cycle discussed above. If the processor 202 determines from the signals from the hall effect sensor 123 that the accumulator has an insufficient amount of strap therein, then in step 330, the processor provides a forward command to the accumulator motor 122. In response thereto, the accumulator motor 122 pays off strap from the primary or secondary dispenser 11 into the accumulator 12, until the processor 202 receives an accumulator full signal from the hall effect sensor 132 or strap depleted signal from the strap exhausted switch 112. In response thereto, the processor 202 deactivates the accumulator motor 122. In step 332, the processor 202 determines whether the strap 20 has been depleted by monitoring the strap exhausted switch 112. If the processor 202 detects a strap exhausted signal in step 332, then in step 334, the processor performs the strap retract sequence, described below with respect to Figure 12D.

Referring to Figure 12C, an exemplary load/feed routine 340 begins in step 341 where the processor 202 receives a load initiation signal from the operator pressing a load push button (not shown). In step 342, the processor 202 provides a forward command to the accumulator motor 122 so that the pinch and drive rollers 114 and 115 rotate to provide strap into the accumulator 12. In step 344, the processor 202 activates the accumulator door solenoid 121 so that the strap is guided through the guide 30 in the accumulator door 119 into the feed/tension unit 13.

In step 346, the processor 202 detects the strap present signal from the strap sensor 166. Thereafter, in step 348, the processor 202 deactivates the accumulator door solenoid 121. In step 350, the accumulator motor 122 continues to force strap from the dispenser 11 into the accumulator 12 until the processor 202 receives a full signal from the hall effect sensor 123. Thereafter, in step 352, the processor 202 deactivates the accumulator motor 122. In step 354, the processor 202 provides a forward command to the feed/tension motor 126, at a slow speed, just until the processor receives the strap present signal from the strap sensor 166. In response thereto, the processor 202 establishes a zero point for the strap.

In step 356, the processor 202 performs the above described feed sequence for feeding strap through the track 14. In summary, the processor 202 feeds a

predetermined amount of strap through the track 14 based on a predetermined number of encoder pulses from the feed/tension encoder 179. Thereafter, the processor 202 returns to the main routine 300.

Referring to Figure 12D, an exemplary strap retract routine 360 is shown. In step 362, the processor 202 deactivates the accumulator motor 122 preventing the remaining strap from being pulled into the accumulator. If the remaining strap is pulled completely into the accumulator, it generally cannot be automatically ejected. In step 364, the processor 202 causes the machine 10 to continue strapping cycles until the hall effect sensor 123 provides an appropriate signal to the processor that the accumulator is low (*i.e.,* not full). In response thereto, in step 366, the processor 202 provides a reverse command to the feed/tension motor 126 and the accumulator motor 122, which causes it to retract any strap from the track 14 and the accumulator 12. The feed/tension motor 126 and accumulator motor 122 reverse concurrently to expedite the retract cycle. Thereafter, in step 368, the processor 202 provides a reverse command to the accumulator motor 122, causing it to eject the remaining portion of strap within the accumulator. In step 370, the processor 202 initiates the load routine 340 of Figure 12C.

Although specific embodiments of, and examples for, the present invention have been described above for purposes of illustration, various modifications can be made without departing the spirit and scope of the invention, as will be evident by those skilled in the relevant art. For example, the machine 10 can include additional sensors and encoders to provide additional signals to control the application of strapping to bundles of various size and consistency. Additionally, all U.S. patents cited above are incorporated herein by reference as if set forth in their entirety. The teachings of the U.S. patents can be modified and employed by aspects of the present invention, based on the detailed description provided herein, as will be recognizable to those skilled in the relevant art. The teachings provided herein of the present invention can be applied to other bundling systems, not necessarily those limited to bundling objects such as newspapers or magazines.

Furthermore, while the present invention is generally described as being applied to a strapping machine, the principles of the present invention can be applied to other machines for manipulating flexible tape-shaped material. These and other changes can be made to the invention in light of the above detailed description. In general, in the following claims, the terms used should not be construed to limit the invention to the specific embodiments disclosed in the specification and the claims, but should be construed to include all systems for manipulating tape-shaped material in accordance with the claims. Accordingly, the invention is not limited by the disclosure, but instead its scope is to be determined entirely from the following claims.

CLAIMS

1. In an apparatus for bundling one or more objects positioned within a track with tape shaped material, a drive unit comprising:

a servo motor;

a drive roller rotatably received by the first servo motor;

a motor encoder coupled to the drive roller and providing drive roller signals indicating a position of the drive roller;

a position sensor coupled to the pinch roller and providing pinch roller signals indicating a position of the pinch roller;

a pinch roller biased against the drive roller so that the pinch and drive rollers feed a free end of the tape material about the track under control of the first servo motor; and

a control unit electrically coupled to the servo motor, motor encoder and position sensor, the control unit providing forward signals to the first servo motor to control feeding of the tape material about the track and providing reversing signals to the first servo motor to control tensioning of the tape material about the objects, the control unit monitoring the drive and pinch roller signals and halting the first servo motor when the drive and pinch roller signals have a predetermined relationship to a first selected value.

2. The drive unit of claim 1 wherein the feed and tension unit includes a pinch solenoid coupled to the pinch roller that biases the pinch roller against the drive roller with a selectable biasing force based on a pinch solenoid signal supplied thereto, and

wherein the control unit is electrically coupled to the pinch solenoid and supplies the pinch solenoid signal thereto.

3. The drive unit of claim 2 wherein the control unit provides a first pinch solenoid signal to the pinch solenoid during the feeding of the tape material about the track, the pinch solenoid providing a weak biasing force in response to the first pinch solenoid signal, and wherein the control unit monitors the drive and pinch roller signals and reverses the first servo motor when the drive and pinch roller signals have a predetermined relationship to a second selected value indicating a misfeed condition.

4. The drive unit of claim 2 wherein the control unit provides a second pinch solenoid signal to the pinch solenoid during the tensioning of the tape material about the track, the pinch solenoid providing a strong biasing force in response to the second pinch solenoid signal, and wherein the control unit monitors the drive and pinch roller signals and halts the first servo motor when the drive and pinch roller signals have the predetermined relationship to the first selected value indicating slippage of the tape material between the drive and pinch rollers.

5. The drive unit of claim 1 wherein the motor encoder is a digital encoder, wherein the drive roller signals are digital signals, wherein the position sensor includes a pair of inductive sensors, wherein the pinch roller has a plurality of regular, radially positioned holes proximate to the inductive sensors, and wherein the digital encoder and inductive sensors provide quadrature signals to the control unit.

6. In an apparatus for bundling one or more objects positioned within a track with tape material having an elongated planar surface, a tape material tensioning unit comprising:

a biased roller;

a gripper unit positioned proximate to the biased roller and adjacent to an upstream portion of the tape material, the gripper unit capable of gripping the upstream portion of the tape material while the biased roller forces a downstream portion of the tape material in a direction perpendicular to the planar surface of the tape material to provide a tensioning of the tape material about the objects;

an electrically operable disabling unit that selectively disables the tape material tensioning unit in response to a disabling signal; and

a control unit electrically coupled to the disabling unit, the control unit providing the disabling signal to the disabling unit to selectively disengage the tape material tensioning unit.

7. The tape material tensioning unit of claim 6, further comprising a tension adjustment assembly coupled to the biased roller that permits selective adjustment of a tension force imposed by the biased roller on the upstream portion of the tape material.

8. The tape material tensioning unit of claim 7 wherein the tension adjustment assembly includes an adjustment lever and a compression spring coupled between a first end of the adjustment lever and the biased roller, the adjustment lever being selectively pivotable to increase or decrease the tension force imposed on the biased roller by the compression spring.

9. The tape material tensioning unit of claim 7 wherein the tension adjustment assembly includes a pneumatic cylinder coupled to the biased roller.

10. The tape material tensioning unit of claim 6 wherein the electrically operable disabling unit includes a pneumatic cylinder which actuates the biased roller to a disabled position in response to the disabling signal.

11. The tape material tensioning unit of claim 6, further comprising a servo motor coupled to the control unit and a tension arm coupled to and driven by the servo motor from a home position to a tension position, wherein the biased roller is rotatably coupled to the tension arm to force the downstream portion of the tape material in the direction transverse to the direction of the tape material when the tension arm moves to the tension position, wherein the gripper unit includes a guide block having a surface along which the tape material travels, and a gripper arm pivotally retained at a first end to the tension arm and pivotally retaining a gripper head at a free end, and wherein the tension arm directs the gripper arm and gripper head against the surface of the guide block to secure the first upstream portion therebetween as the gripper head pivots against the surface of the guide block when the control unit supplies a tension signal to the servo motor to cause the servo motor to move the tension arm from the home position to the tension position.

12. In a bundling system for bundling one or more objects positioned within a track with tape shaped material, the bundling system having a dispenser of tape material, the track, a first motor driven pinch roller unit, and a motor driven tape material cutting and securing unit, a method of controlling the bundling system comprising the steps of:

driving the first pinch roller unit forward;

feeding the tape material about the track from the dispenser;

activating the cutting and securing unit to secure a free end of the tape material;

reversing the first pinch roller unit;

tensioning the tape material about the objects;

monitoring a position of the tape material;

halting the first pinch roller unit when a monitored position of the tape material has a predetermined relationship to a selected value;

fixedly securing the free and an upstream portion of the tape material together; and

cutting the upstream portion of the tape material from a remainder of the tape material.

13. The method of claim 12 wherein the bundling system includes a secondary tension unit, and wherein the method further includes the steps of:

determining that secondary tensioning is not to be applied to the objects; and

deactivating the secondary tension unit so that secondary tensioning is not applied to the objects.

14. The method of claim 12 wherein the first pinch roller unit includes a drive roller and a pinch roller, and wherein the step of monitoring the position of the tape material includes the steps of:

monitoring position signals from the drive and pinch rollers; and

determining a difference between the drive and pinch roller signals.

15. The method of claim 12 wherein the first pinch roller unit includes a drive roller and a pinch roller, and wherein the step of reversing the pinch roller unit includes the steps of:

monitoring pulse signals from one of the drive and pinch rollers; and

reversing the pinch roller unit until the one of the drive and pinch rollers provides a selected number of pulse signals.

16. The method of claim 12 wherein the bundling system includes a tape material accumulating compartment having an accumulating compartment full sensor and a second motor driven pinch roller unit, and wherein the method further comprises the steps of:

receiving a compartment low signal from the accumulating compartment sensor

driving the second pinch roller unit forward to feed tape material into the accumulating compartment;

monitor the accumulating compartment full sensor for a compartment full signal; and

halting the second pinch roller unit when the compartment full signal is received.

17. The method of claim 16 wherein the accumulating compartment includes a selectively engageable tape material load guide, and wherein the method further comprises the steps:

engaging the load guide;

driving the second pinch roller unit forward to feed tape material through the load guide and into the first pinch roller unit;

detecting the free end of the strap; and

disengaging the load guide.

18. The method of claim 17, further comprising the steps of:

driving the first pinch roller forward at a slow rate until the free end of the tape material is initially detected; and

establishing a zero position location for the tape material.

19. The method of claim 16, further comprising the steps of:

detecting an end of the tape material on the dispenser; and

reversing the first and second pinch rollers to eject a remaining portion of the tape material from the accumulating compartment.

20. An apparatus for bundling one or more objects with flexible strap material, the apparatus comprising:

a frame;

a dispenser of the strap material retained by the frame;

a strap material accumulating compartment fixed to the frame and having an inlet that receives a free end of the strap material from the dispenser, and an outlet;

a track retained by the frame and adjacent to the group of objects, the track releasably receiving a portion of the strap material about but spaced apart from the group of objects;

a feed and tension unit retained by the housing at the outlet of the strap material accumulating compartment and having a first servo motor, a drive roller rotatably received by the first servo motor, a motor encoder coupled to the drive roller and providing drive roller signals indicating a position of the drive roller, and a position sensor and a pinch roller biased against the drive roller so that the pinch and drive rollers feed the free end of the strap material about the track under control of the first servo motor, and the position sensor being coupled to the pinch roller and providing pinch roller signals indicating a position of the pinch roller;

a cutting and sealing unit retained by the frame and adjacent to the track and feed and tension unit, the sealing unit having a second servo motor that actuates first and second hand gripper arms, the first gripper arm retaining the free end of the strap material while the pinch and drive rollers retract a first upstream portion of the strap material under control of the first servo motor to provide a primary tensioning of the strap material about the objects, the second gripper arm retaining a second upstream portion of the strap material following primary tensioning, and the sealing unit having heating and cutting members,

actuatable under control of the second servo motor, that seal the free end and second upstream portion of the strap material together and sever the second upstream portion from a remainder of the strap material, respectively;

a secondary tension unit retained by the frame and having a biased roller and a gripper unit adjacent to the first upstream portion of the strap material, the gripper unit capable of gripping the second upstream portion of the strap material while the biased roller forces a downstream portion of the strap material in a direction transverse to a direction of the strap material to provide a secondary tensioning of the strap material about the objects prior to sealing and cutting by the heating and cutting members, the secondary tension unit having an electrically operable disabling unit that selectively disables the secondary tension unit in response to a disabling signal; and

a control unit electrically coupled to the first servo motor, motor encoder, position sensor, second servo motor and disabling unit, the control unit providing forward signals to the first servo motor to control feeding of the strap material about the track and providing reversing signals to the first servo motor to control primary tensioning of the strap material about the objects, the control unit monitoring the drive and pinch roller signals and halting the first servo motor when the drive and pinch roller signals have a predetermined relationship to a first selected value, and the control unit providing the disabling signal to the disabling unit to selectively disengage the secondary tension unit.

21. The apparatus of claim 20 wherein the feed and tension unit includes a pinch solenoid coupled to the pinch roller that biases the pinch roller against the drive roller with a selectable biasing force based on a pinch solenoid signal supplied thereto, and

wherein the control unit is electrically coupled to the pinch solenoid and supplies the pinch solenoid signal thereto.

22. The apparatus of claim 21 wherein the control unit provides a first pinch solenoid signal to the pinch solenoid during the feeding of the strap material about the track, the pinch solenoid providing a light biasing force in response to the first pinch solenoid signal, and wherein the control unit monitors the drive and pinch roller signals and reverses

the first servo motor when the drive and pinch roller signals have a predetermined relationship to a second selected value indicating a misfeed condition.

23. The apparatus of claim 20 wherein the secondary tension unit includes a tension adjustment assembly coupled to the biased roller that permits selective adjustment of a tension force imposed on the biased roller.

24. The apparatus of claim 23 wherein the tension adjustment assembly includes an adjustment lever and a compression spring coupled between a first end of the adjustment lever and the biased roller, the adjustment lever being selectively pivotable to increase or decrease the tension force imposed on the biased roller by the compression spring.

25. The apparatus of claim 20 wherein the secondary tension unit includes a tension arm coupled to and driven by the second servo motor from a home position to a tension position, the biased roller being rotatably coupled to the tension arm to force the downstream portion of the strap material in the direction transverse to the direction of the strap material when the tension arm moves to the tension position, and the gripper unit including a guide block having a surface along which the strap material travel, and a gripper arm pivotally retained at a first end to the tension arm and pivotally retaining a gripper head at a free end, the tension arm directing the gripper arm and gripper head against the surface of the guide block to secure the first upstream portion therebetween as the gripper head pivots against the surface of the guide block.

26. The apparatus of claim 20 wherein the secondary tension unit includes a pneumatic piston coupled between the biased roller and the control unit, the control unit providing a tensioning signal to cause a tension force to be imposed on the biased roller.

27. The apparatus of claim 20 wherein the electrically operable disabling unit includes a pneumatic cylinder coupled to the control unit, the pneumatic cylinder disabling the secondary tension unit in response to the disabling signal from the control unit.

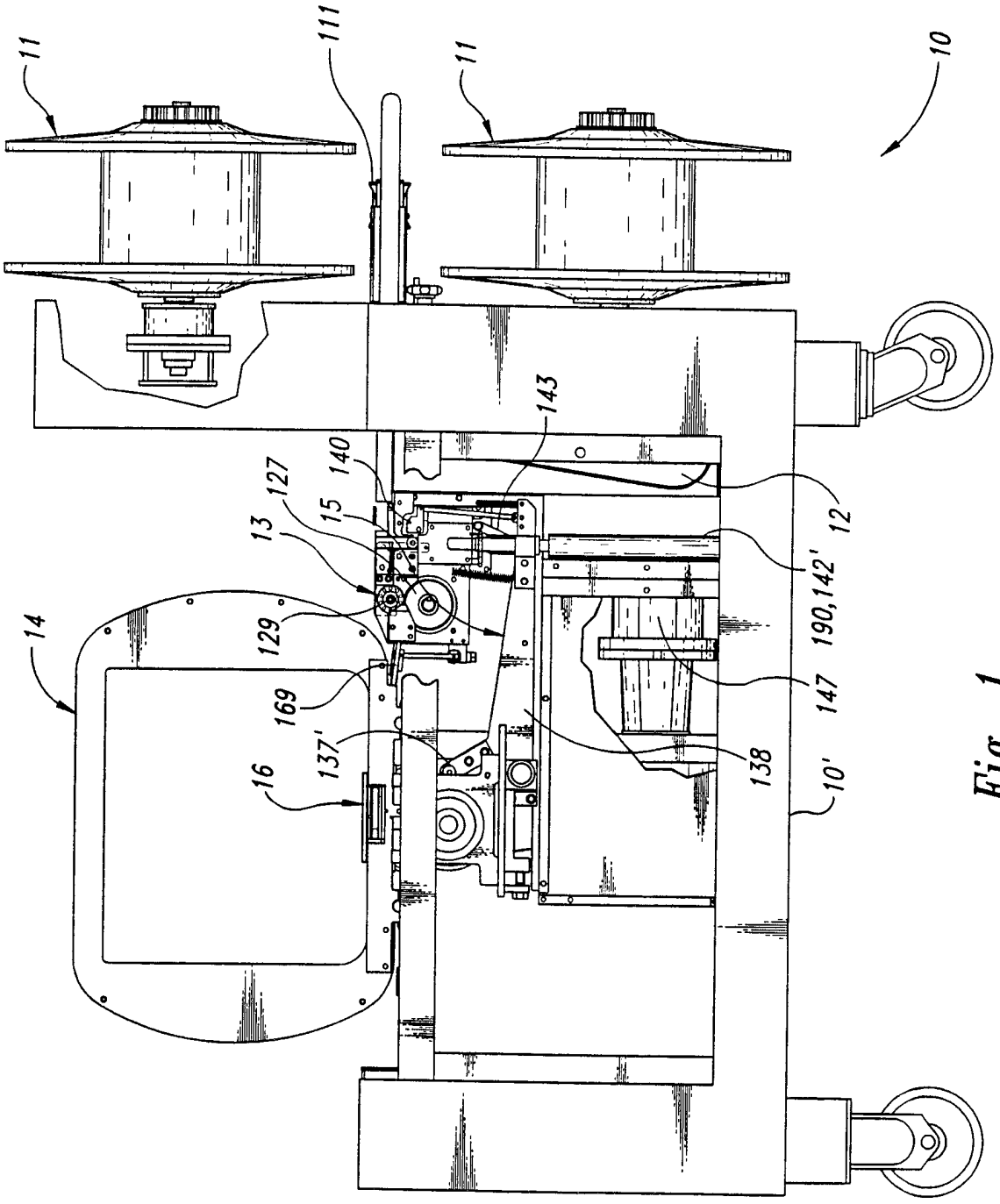
11
111
11
10
143
140
127
15
13
12
190,142'
14
129
147
169
137'
138
16
10'

Fig. 1

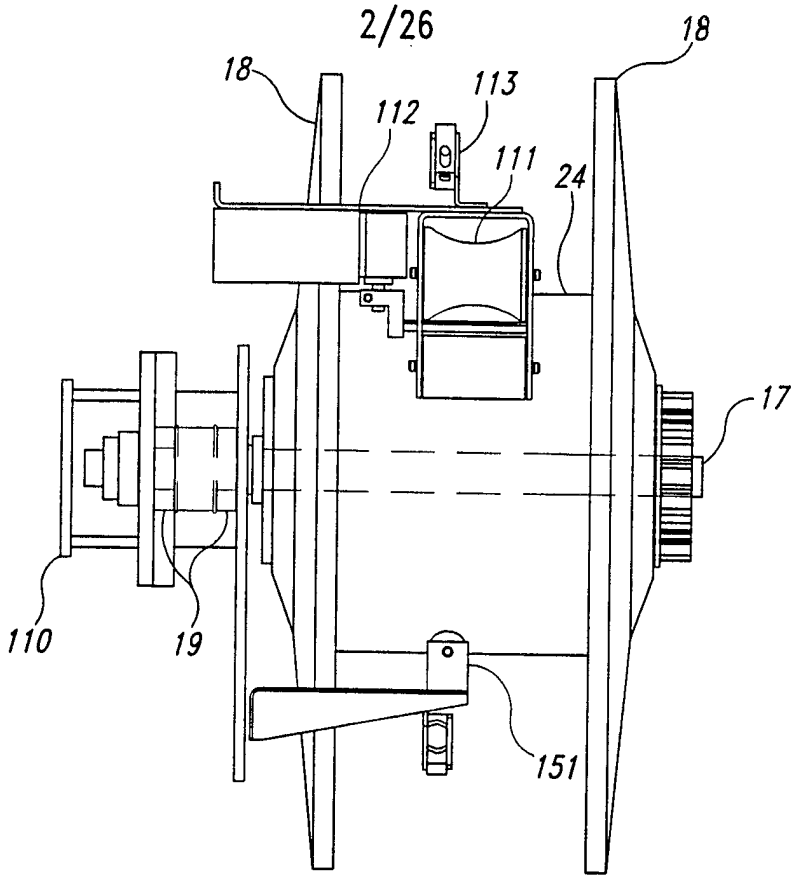
18
18
113
112
111
24
17
110
19
151
LH
RH

Fig. 2A

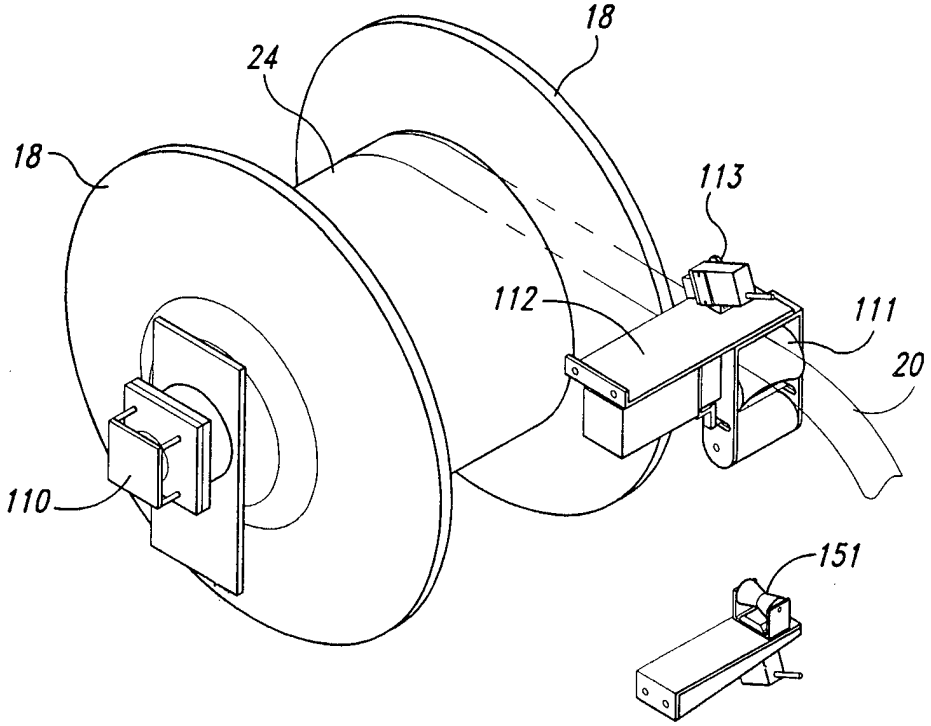
18
24
18
113
112
111
20
110
151

Fig. 2B

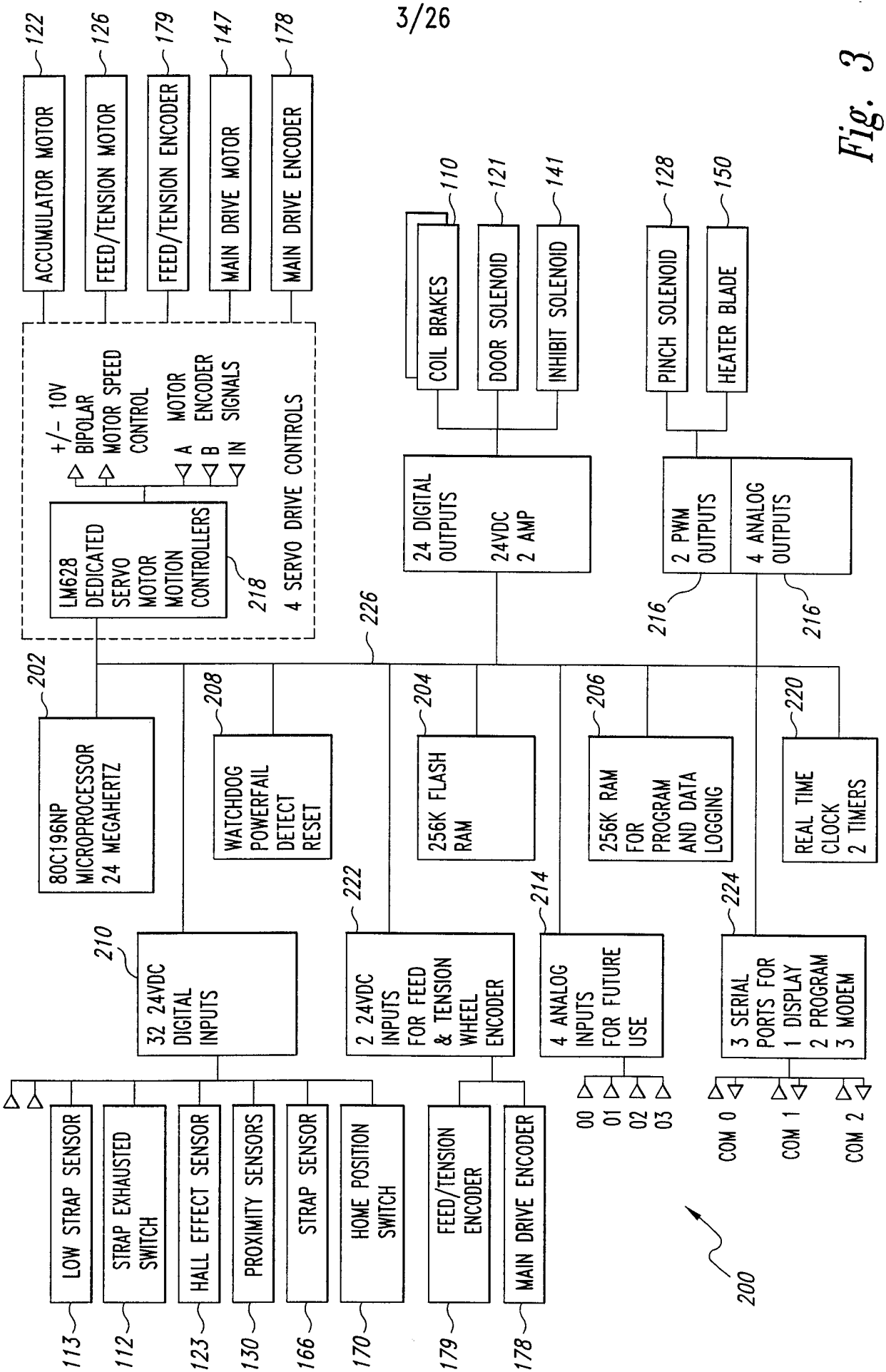
ACCUMULATOR MOTOR
122
FEED/TENSION MOTOR
126
FEED/TENSION ENCODER
179
MAIN DRIVE MOTOR
147
MAIN DRIVE ENCODER
178
+/- 10V BIPOLAR MOTOR SPEED CONTROL
A B IN MOTOR ENCODER SIGNALS
LM628 DEDICATED SERVO MOTOR MOTION CONTROLLERS
218
4 SERVO DRIVE CONTROLS
COIL BRAKES
110
DOOR SOLENOID
121
INHIBIT SOLENOID
141
PINCH SOLENOID
128
HEATER BLADE
150
24 DIGITAL OUTPUTS 24VDC 2 AMP
2 PWM OUTPUTS
4 ANALOG OUTPUTS
216
216
226
202
80C196NP MICROPROCESSOR 24 MEGAHERTZ
208
WATCHDOG POWERFAIL DETECT RESET
204
256K FLASH RAM
206
256K RAM FOR PROGRAM AND DATA LOGGING
220
REAL TIME CLOCK 2 TIMERS
210
32 24VDC DIGITAL INPUTS
222
2 24VDC INPUTS FOR FEED & TENSION WHEEL ENCODER
214
4 ANALOG INPUTS FOR FUTURE USE
224
3 SERIAL PORTS FOR 1 DISPLAY 2 PROGRAM 3 MODEM
LOW STRAP SENSOR
113
STRAP EXHAUSTED SWITCH
112
HALL EFFECT SENSOR
123
PROXIMITY SENSORS
130
STRAP SENSOR
166
HOME POSITION SWITCH
170
FEED/TENSION ENCODER
179
MAIN DRIVE ENCODER
178
00
01
02
03
COM 0
COM 1
COM 2
200

Fig. 3

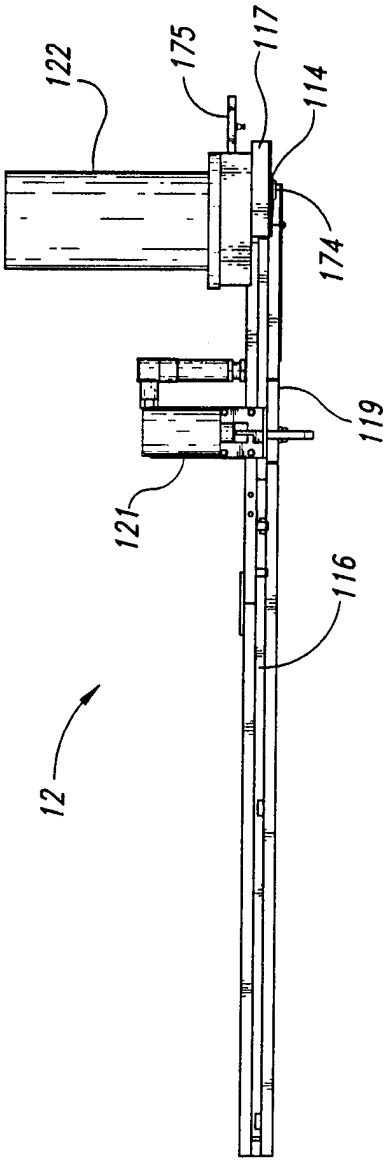
122
175
117
114
174
119
121
116
12

Fig. 4A

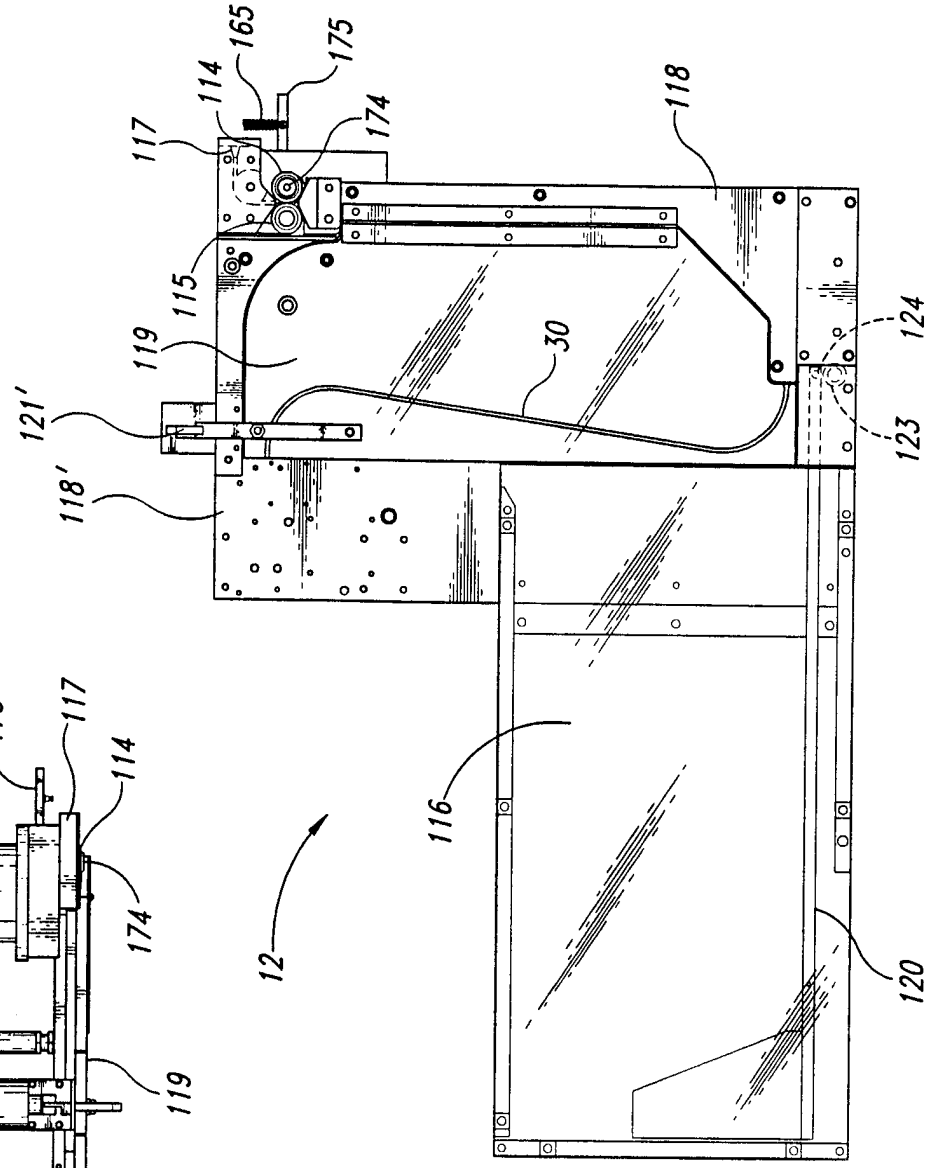
165
175
114
117
174
118
115
119
30
124
121'
123
118'
116
12
120

Fig. 4B

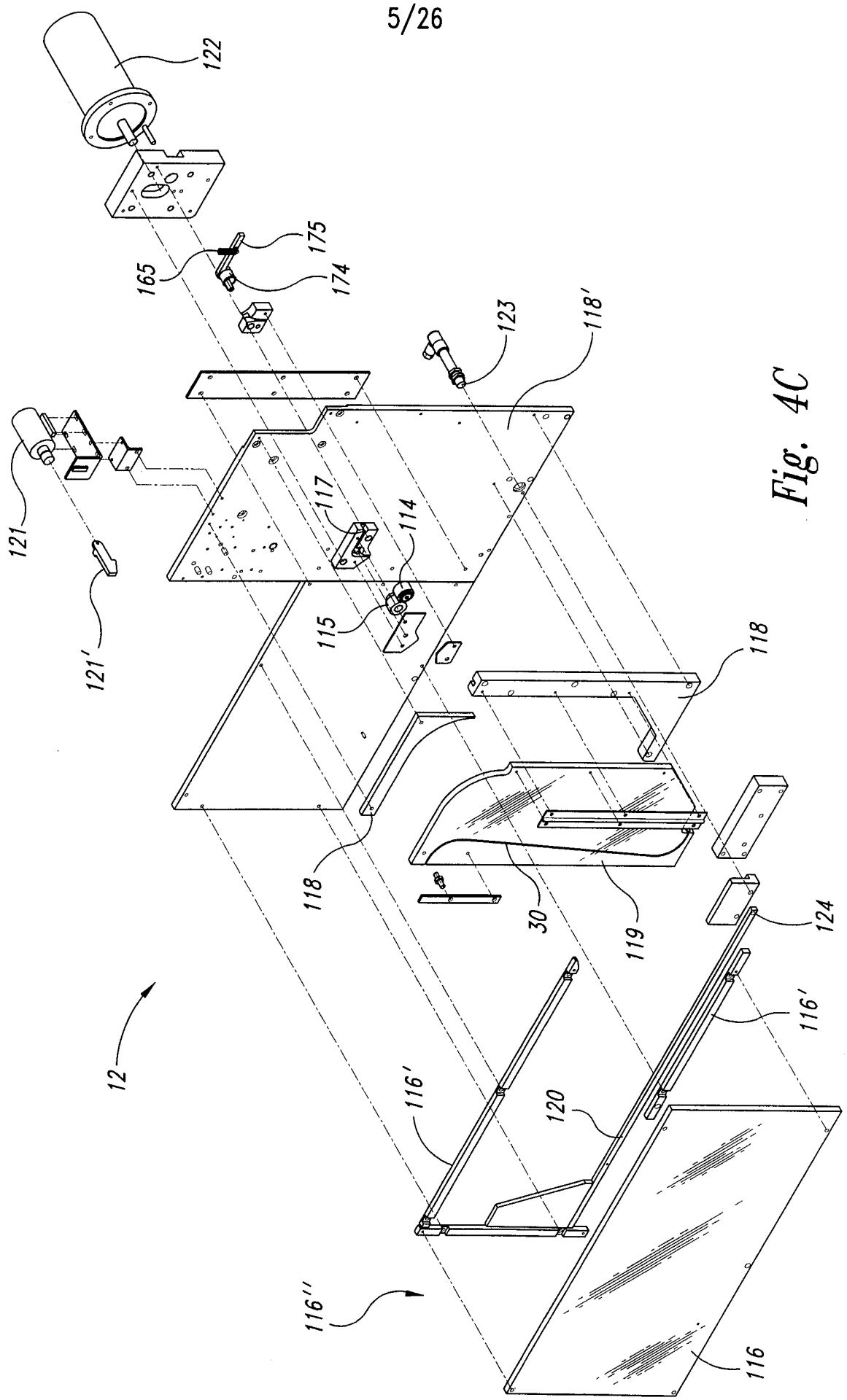
122
175
165
174
123
118'
121
117
114
121'
115
118
118
30
119
124
12
116'
116'
120
116''
116

Fig. 4C

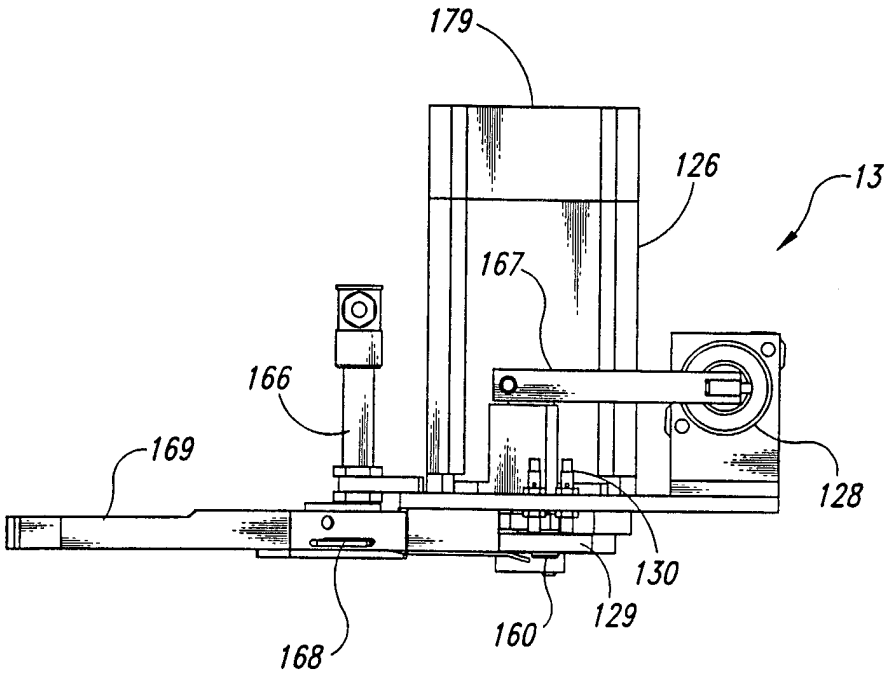
179
126
13
167
166
169
128
130
129
160
168

Fig. 5A

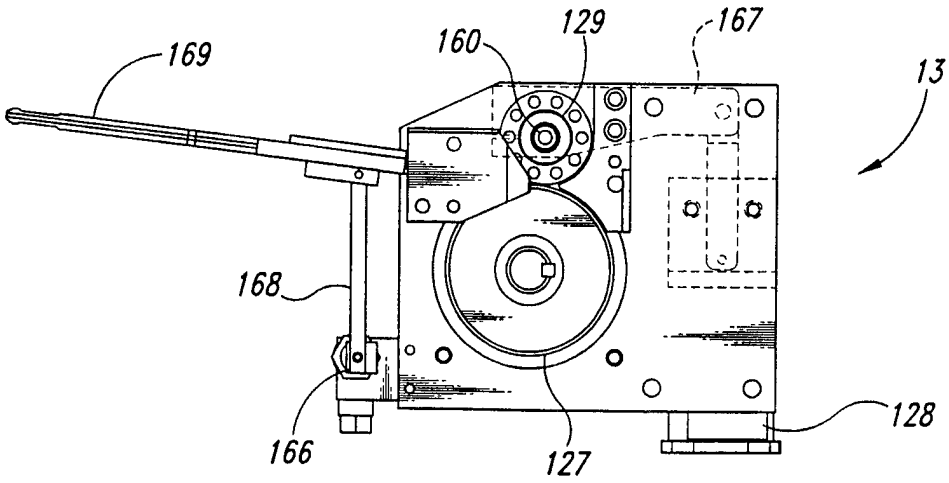
169
160
129
167
13
168
166
127
128

Fig. 5B

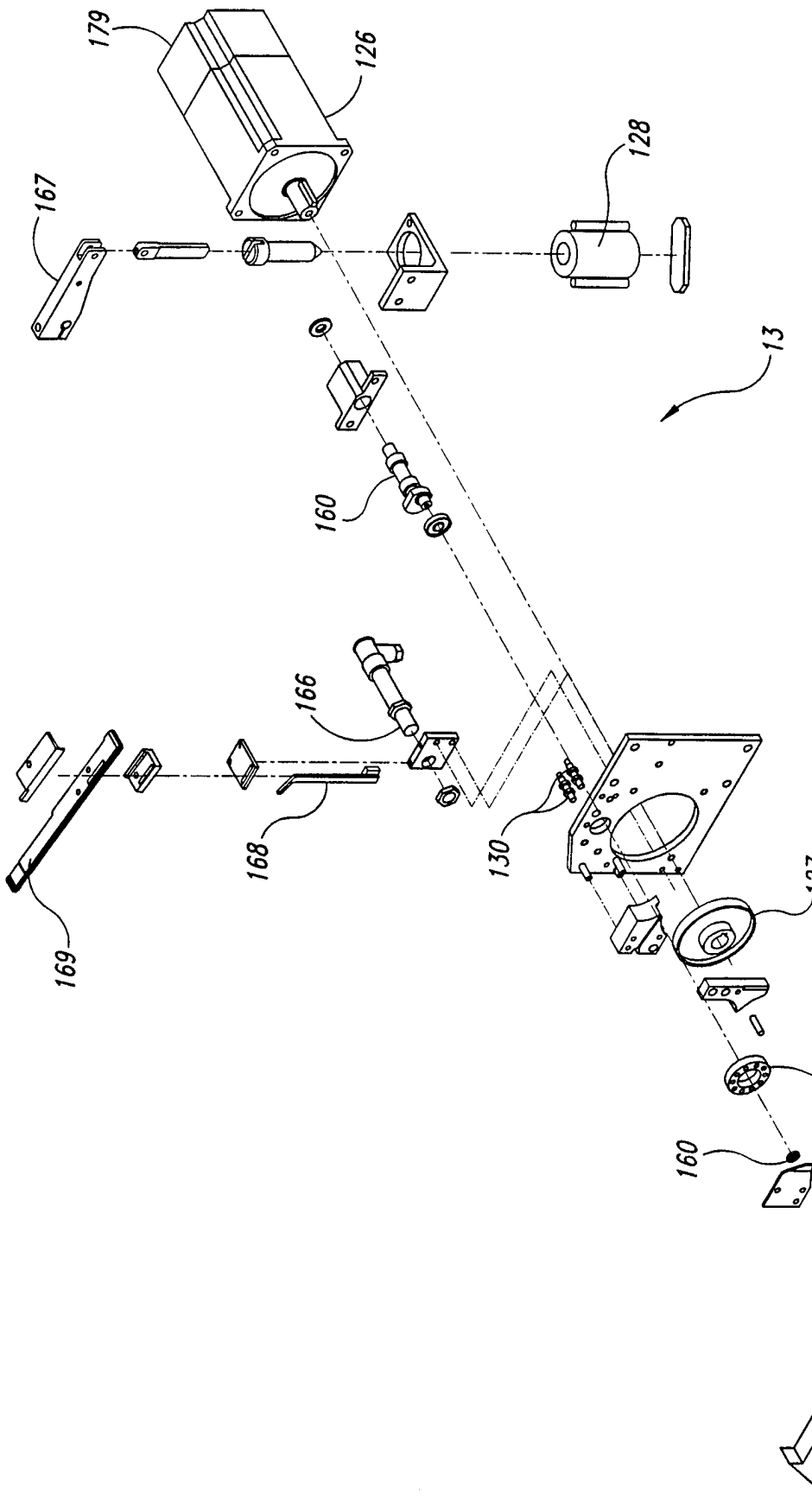

Fig. 5C

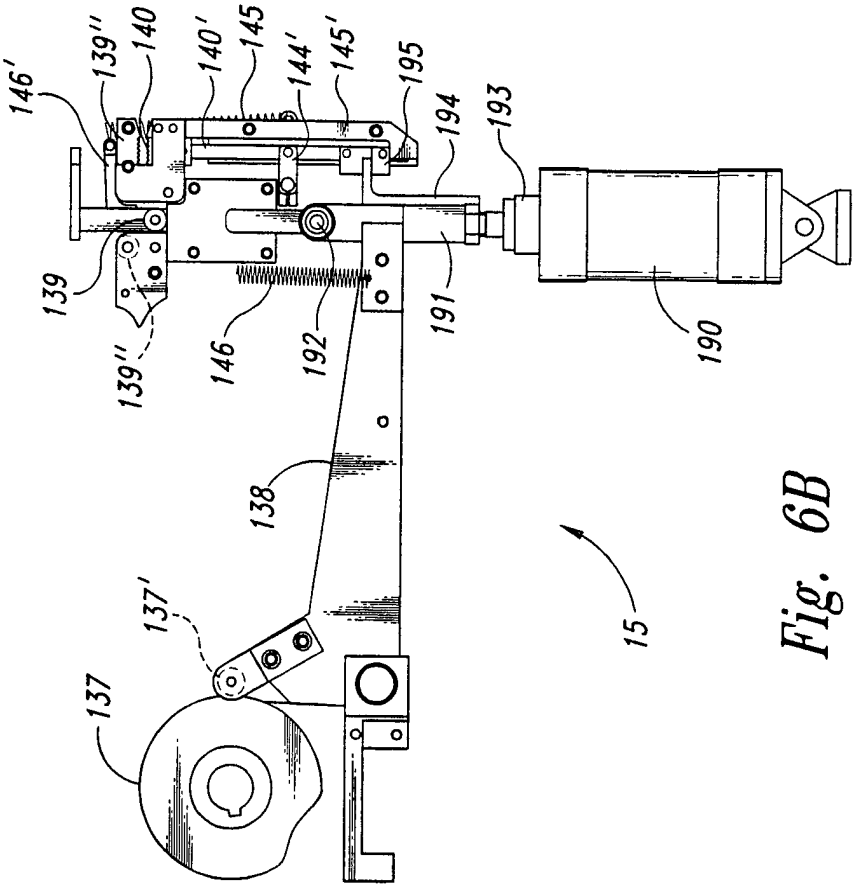
146'
139''
140
140'
145
144'
145'
195
194
193
139
139''
146
192
191
190
138
137'
137
15

Fig. 6B

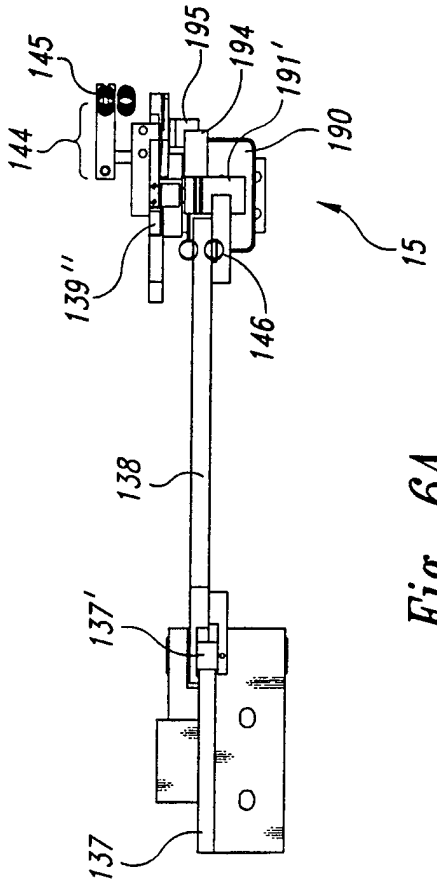
145
144
195
194
191'
190
139''
146
15
138
137'
137

Fig. 6A

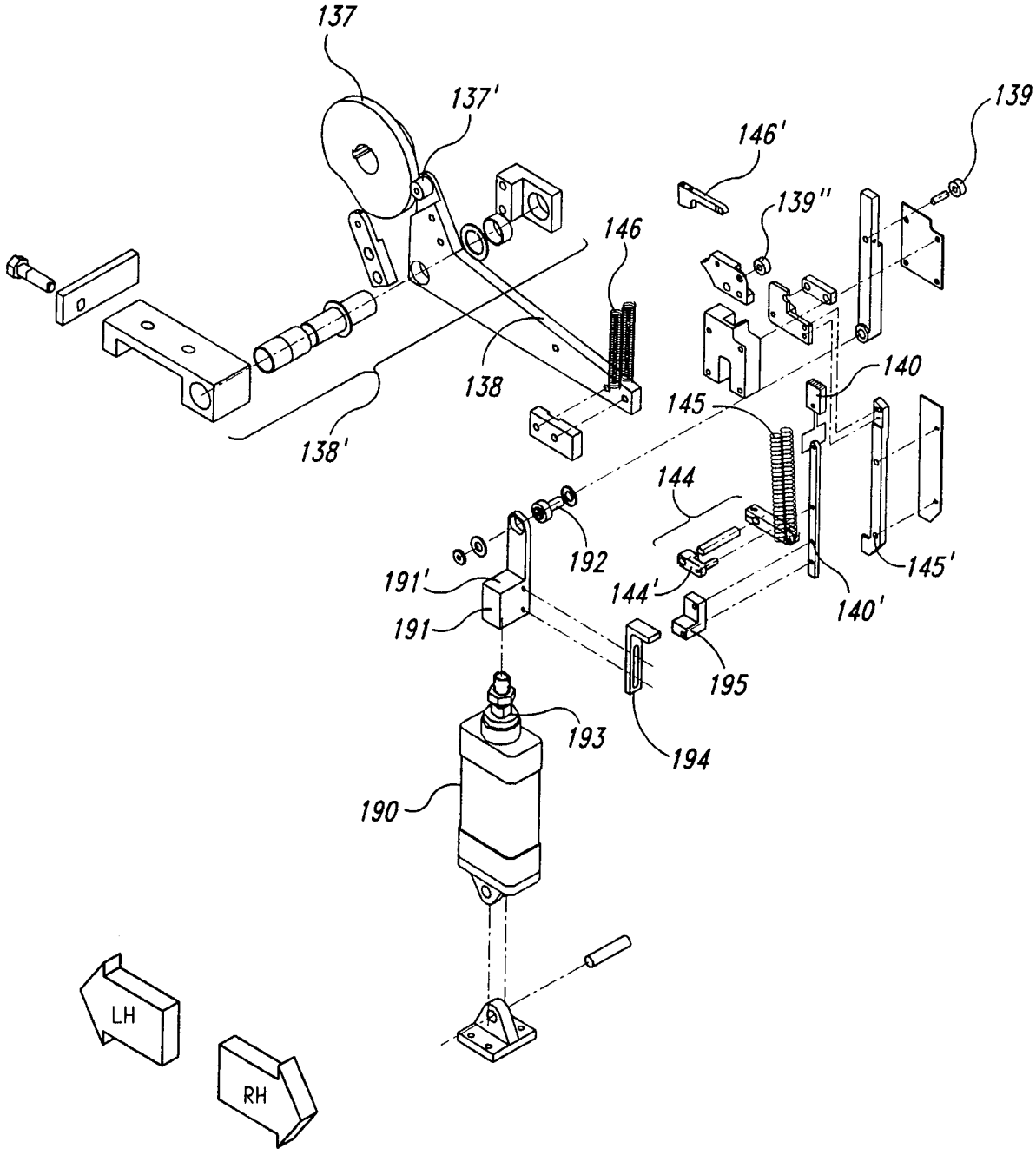
137
137'
139
146'
139''
146
140
138
145
138'
144
192
191'
144'
145'
140'
191
195
193
194
190
LH
RH

Fig. 6C

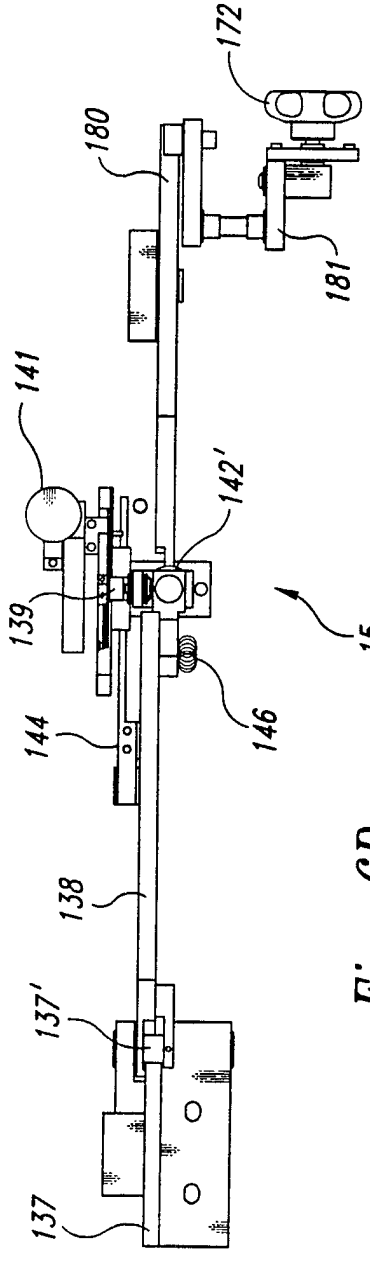
172
180
181
141
142'
139
15
146
144
138
137'
137

Fig. 6D

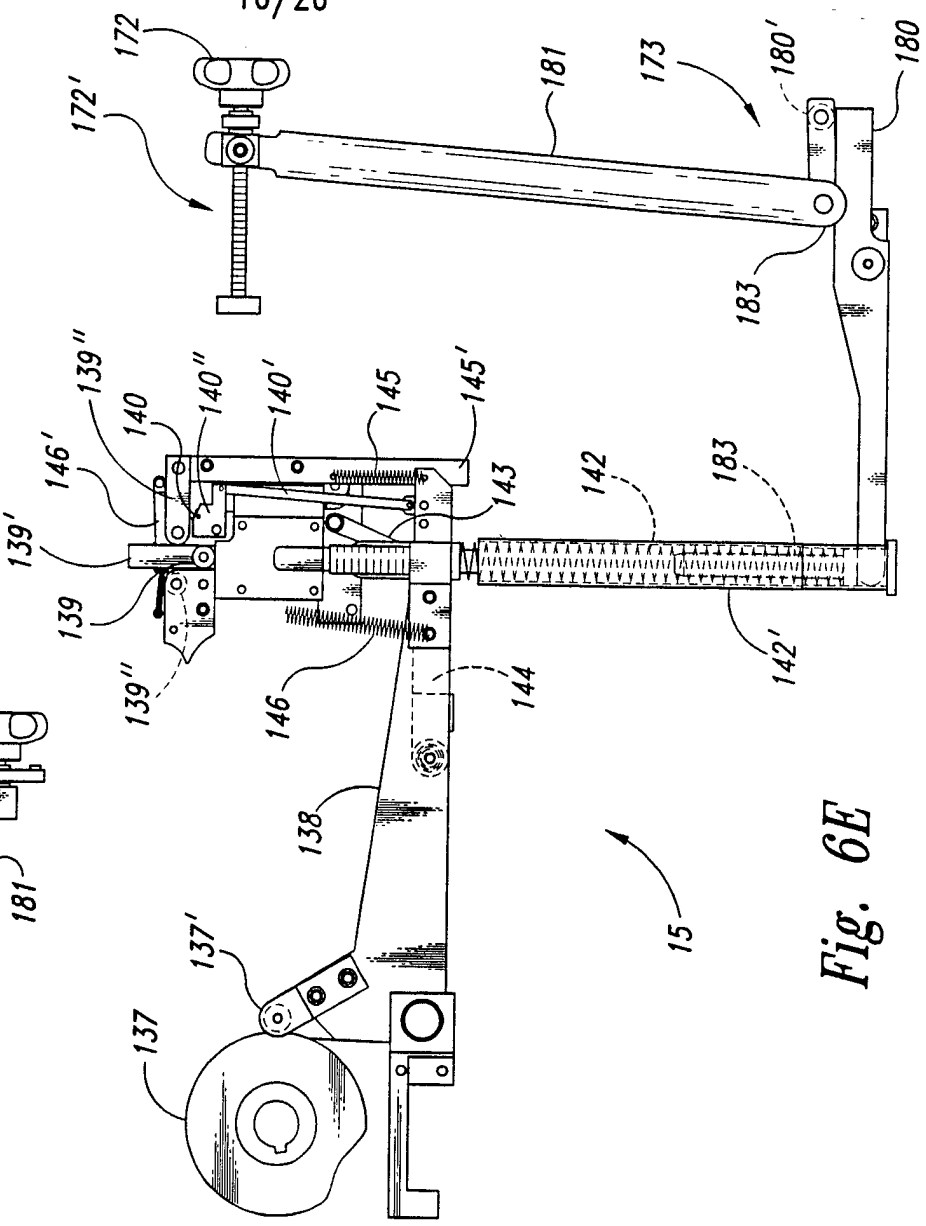
172
172'
181
173
180'
180
183
139''
140
140''
140'
145
145'
146'
143
142
183
139'
139
142'
146
144
138
137'
137
15

Fig. 6E

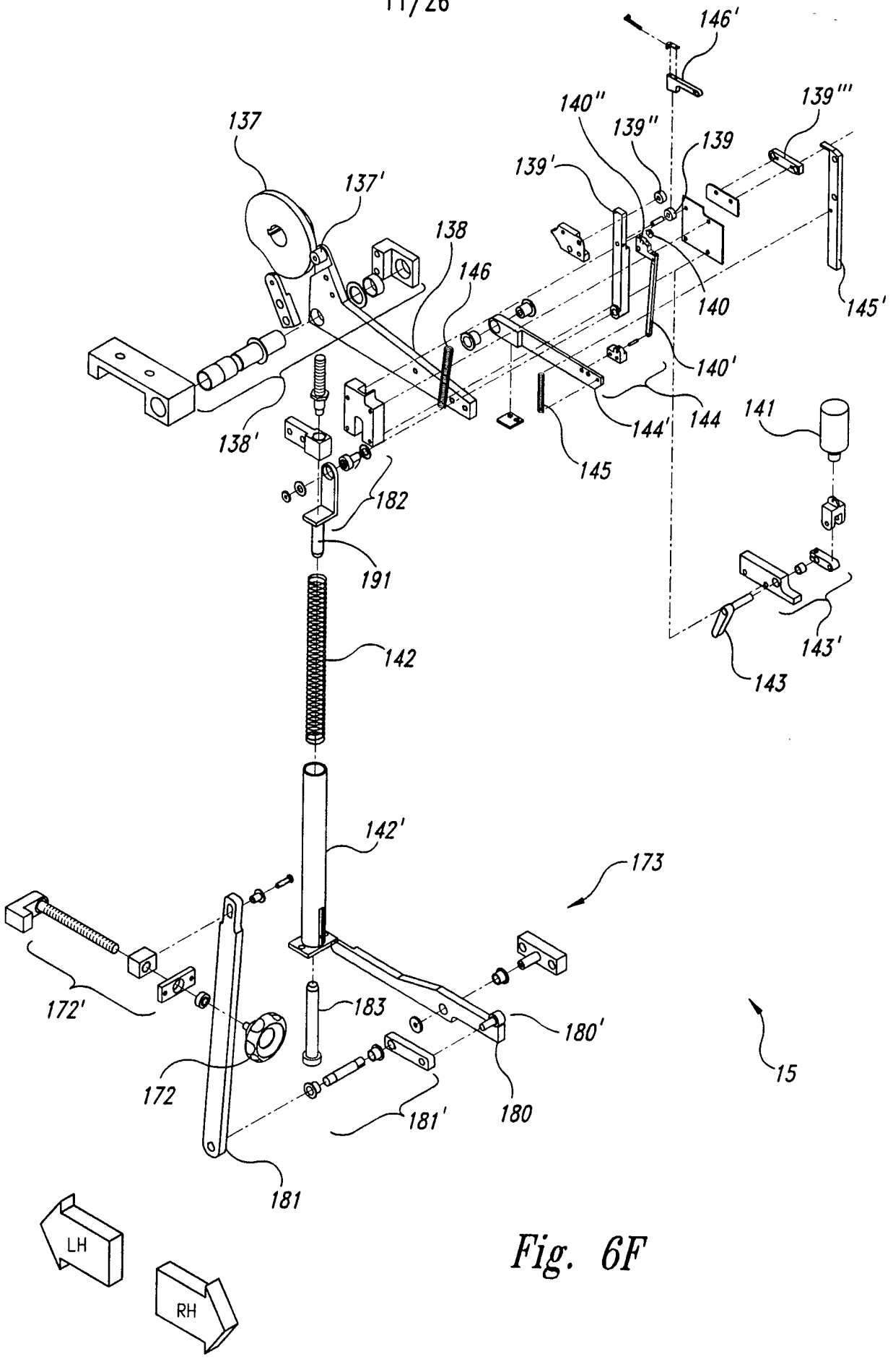
146'
140''
139'''
139''
139
137
139'
137'
138
146
140
145'
140'
144
144'
141
138'
145
182
191
143'
142
143
142'
173
172'
183
180'
15
172
181'
180
181
LH
RH

Fig. 6F

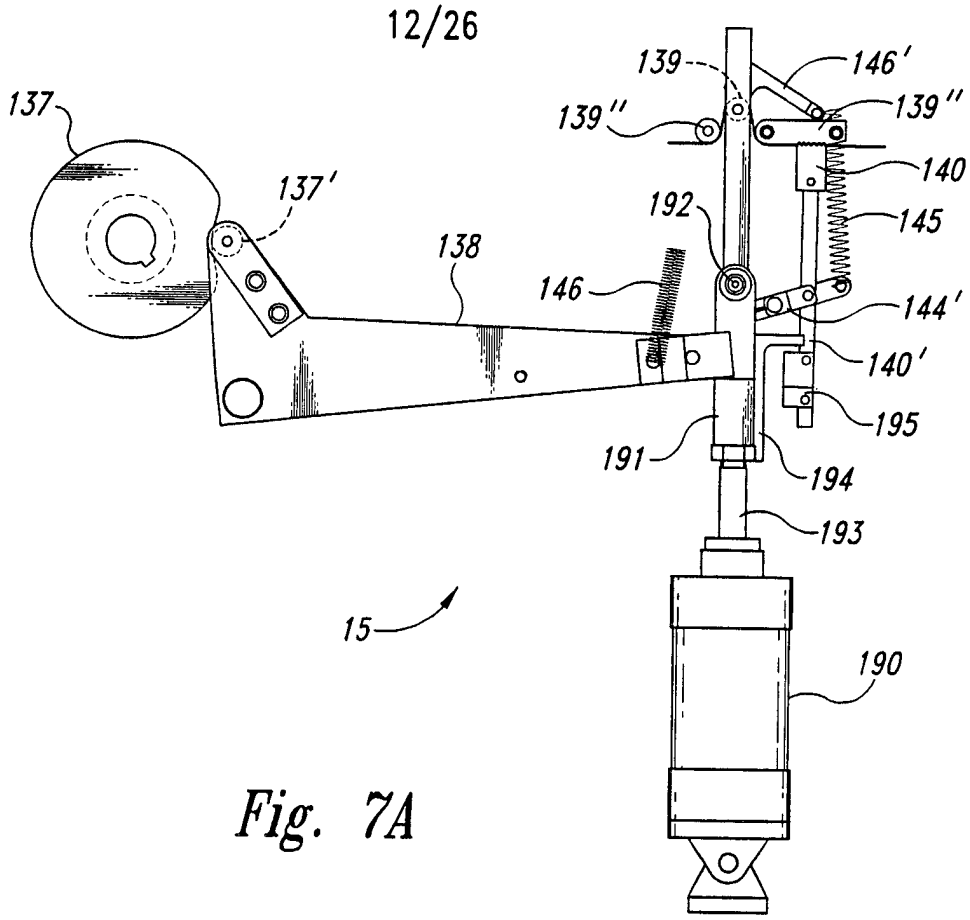
137
137'
138
146
192
139
139''
146'
139''
140
145
144'
140'
195
191
194
193
15
190

Fig. 7A

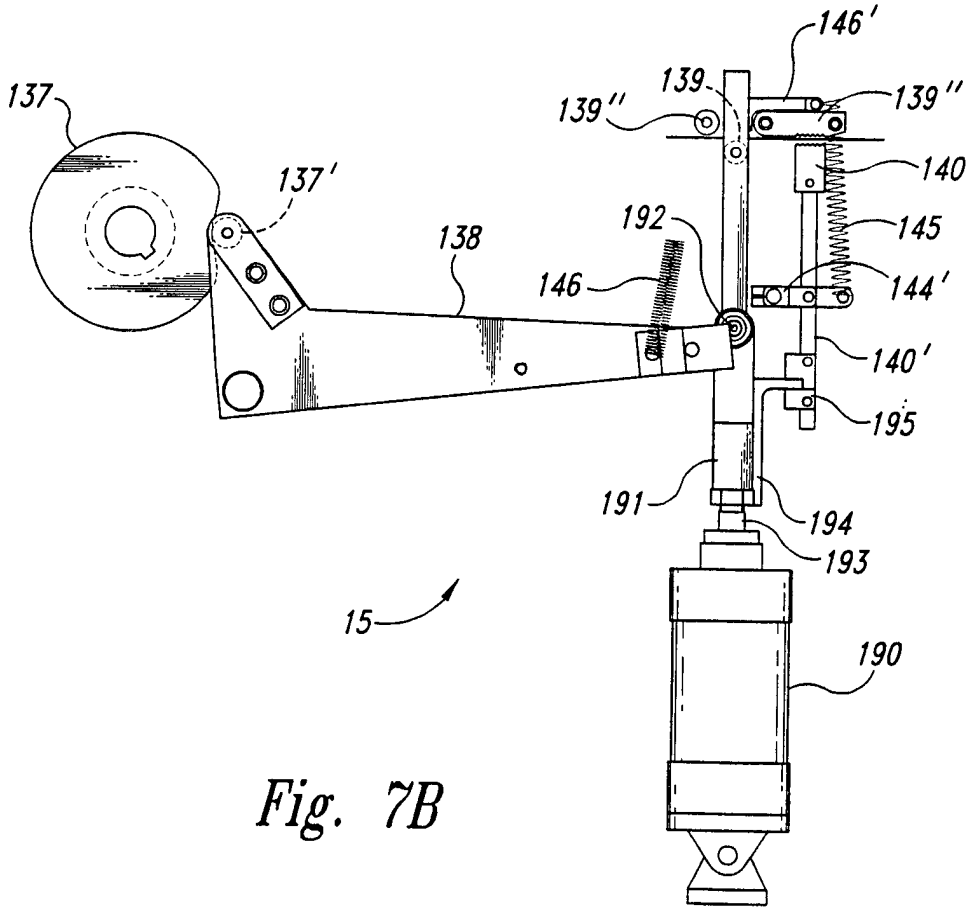
137
137'
138
146
192
139
139''
146'
139''
140
145
144'
140'
195
191
194
193
15
190

Fig. 7B

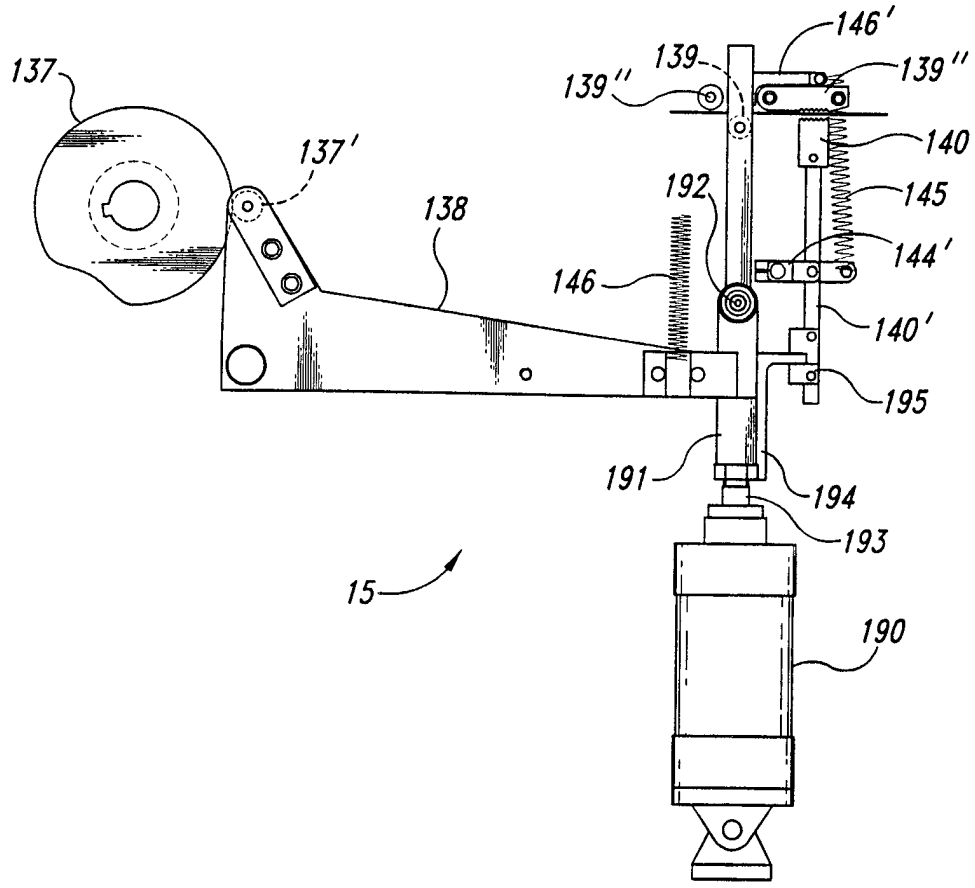
137
137'
138
139
139''
139''
146'
140
145
144'
140'
195
192
146
191
194
193
190
15

Fig. 7C

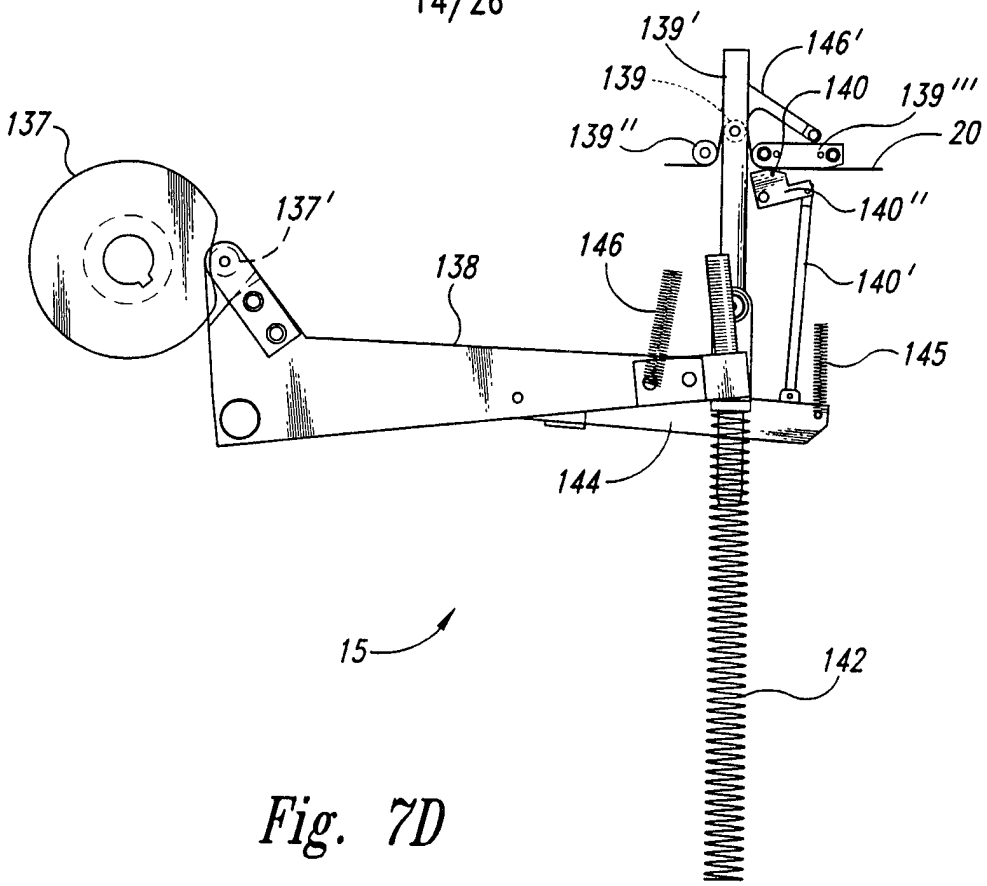
139'
146'
139
140
139'''
139''
20
137
140''
137'
146
138
140'
145
144
15
142

Fig. 7D

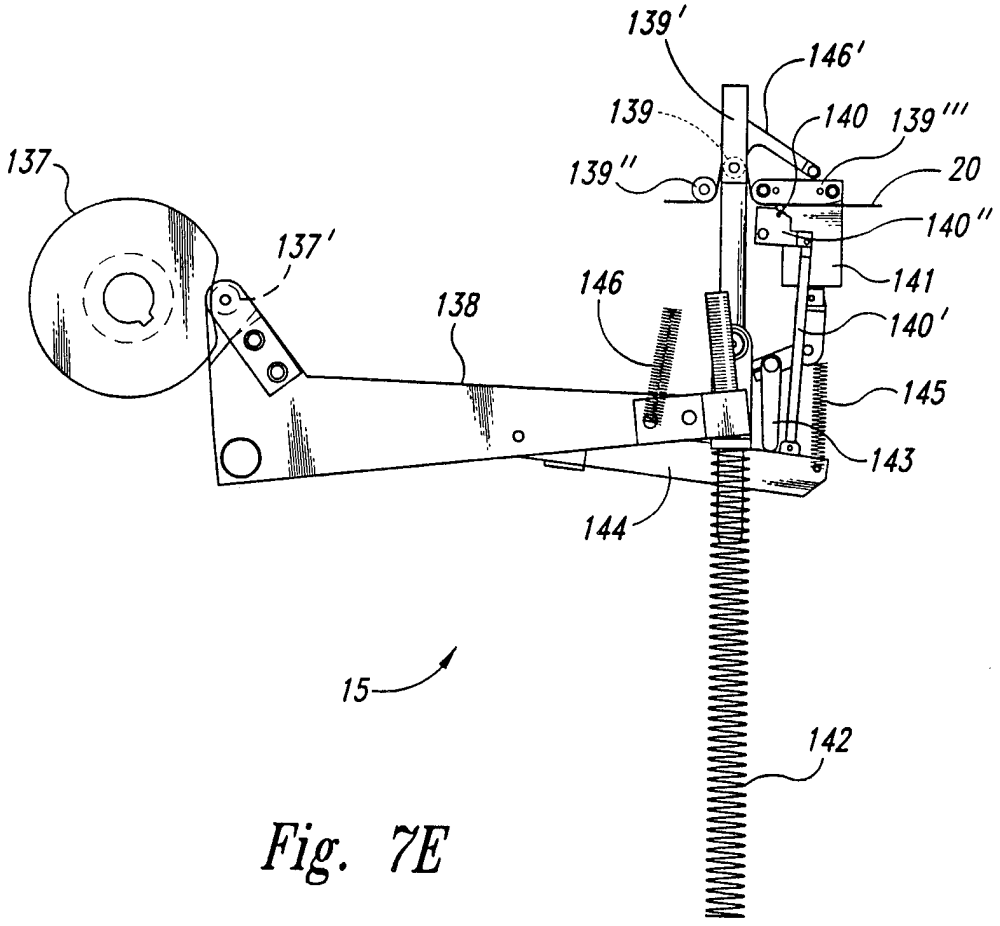
139'
146'
139
140
139'''
139''
20
137
140''
137'
141
146
138
140'
145
143
144
15
142

Fig. 7E

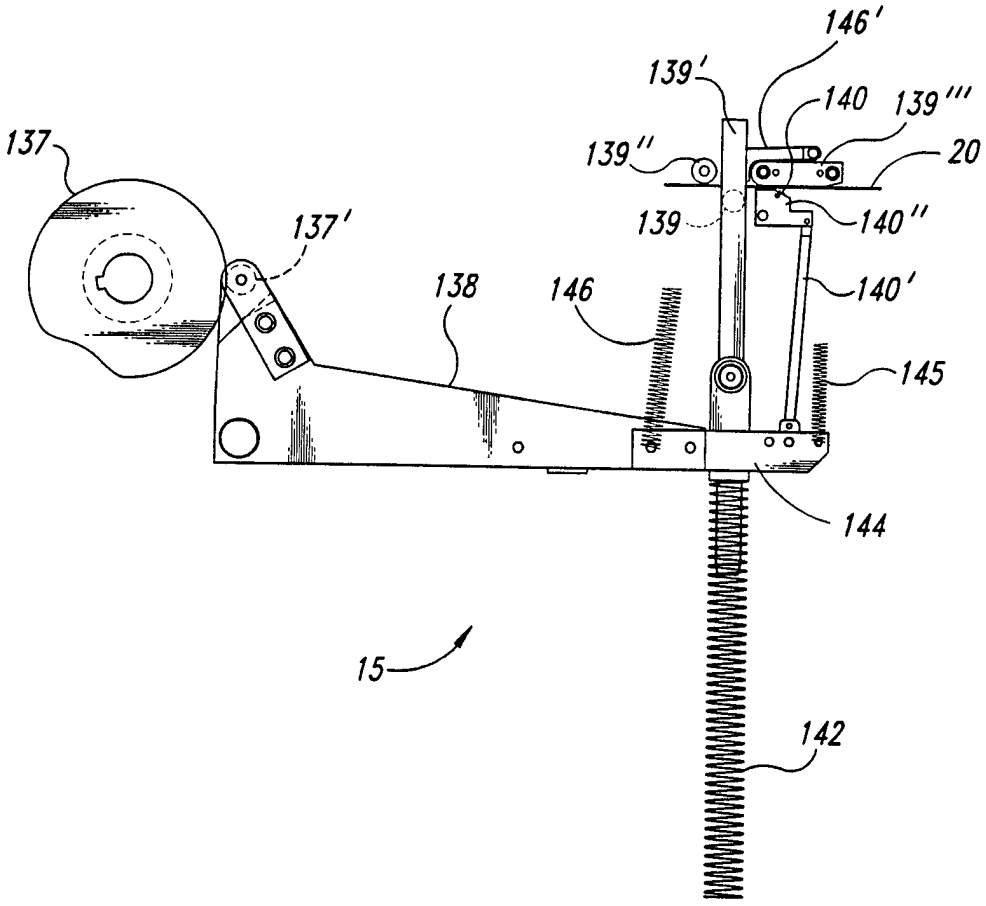

Fig. 7F

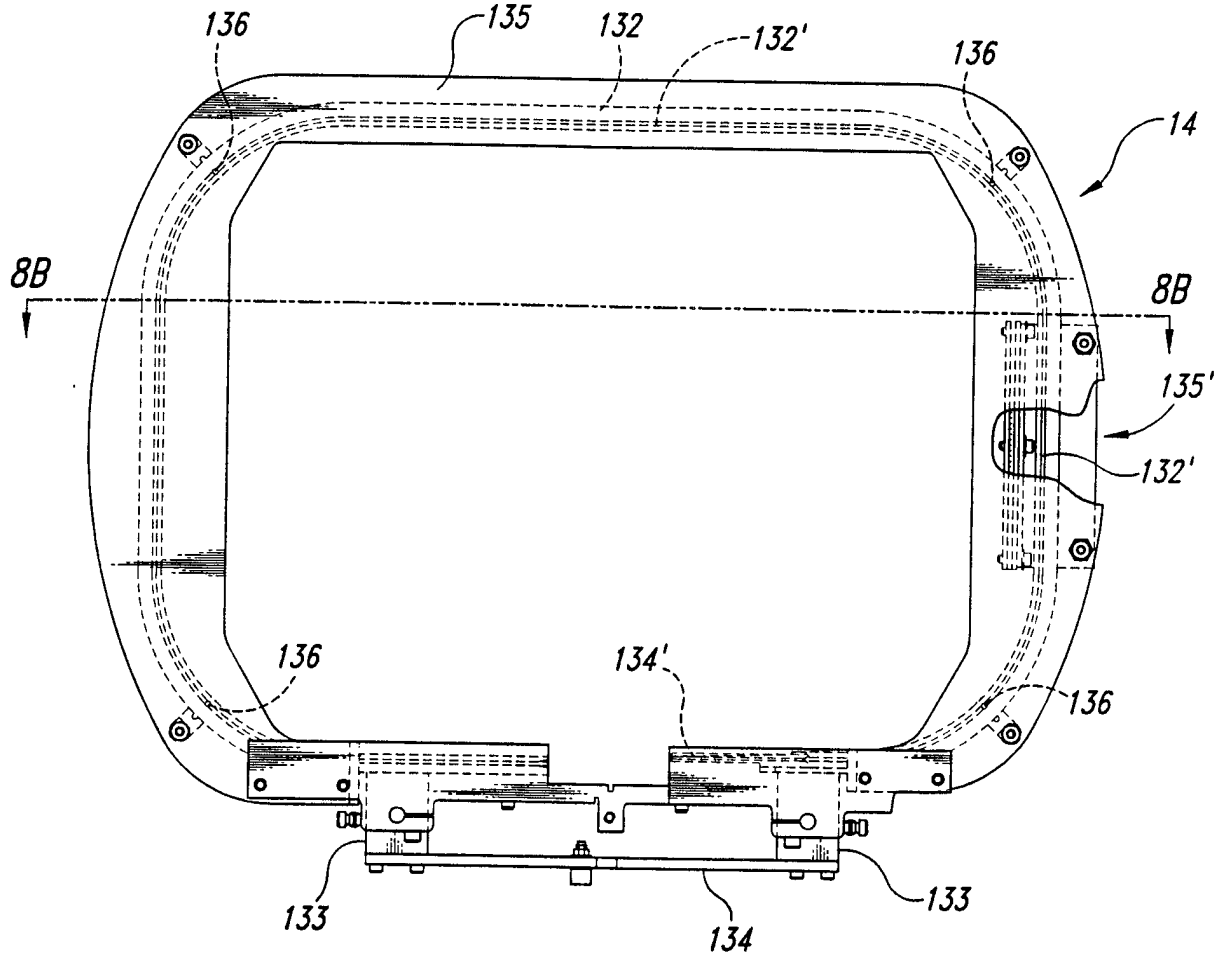
136
135
132
132'
136
14
8B
8B
135'
132'
136
134'
136
133
134
133

Fig. 8A

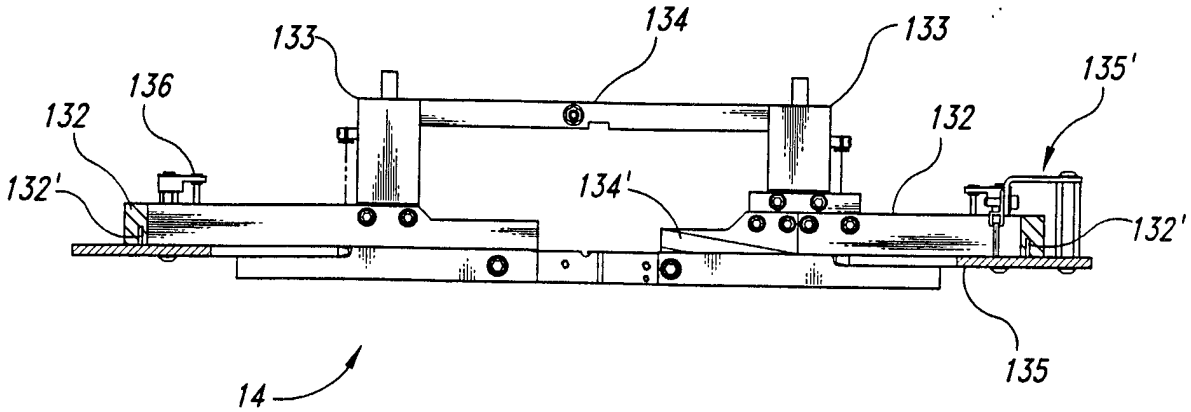
133
134
133
135'
136
132
132
132'
134'
132'
135
14

Fig. 8B

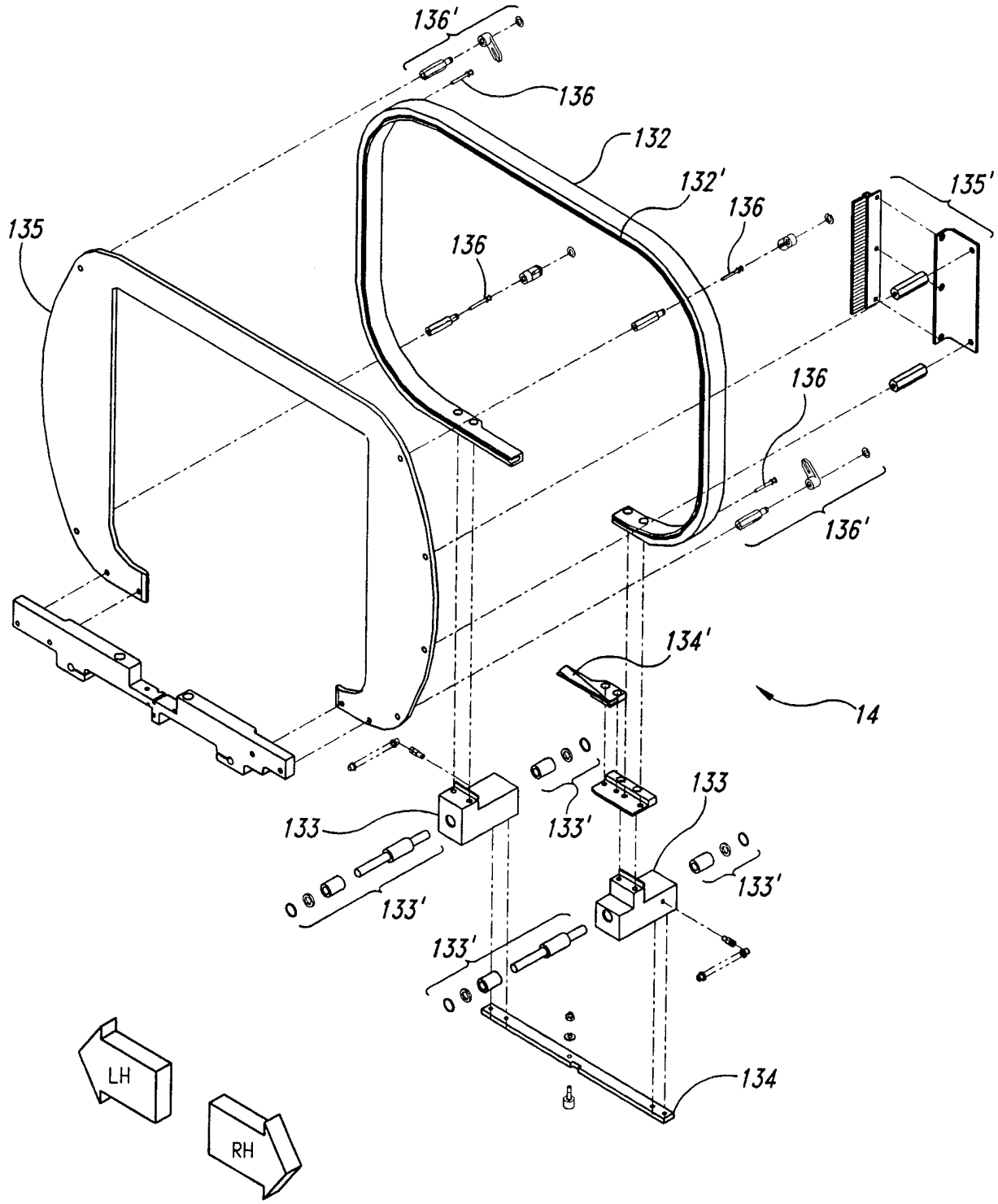
136'
136
132
132'
135'
135
136
136
136
136'
134'
14
133
133'
133
133'
133'
133'
LH
RH
134

Fig. 8C

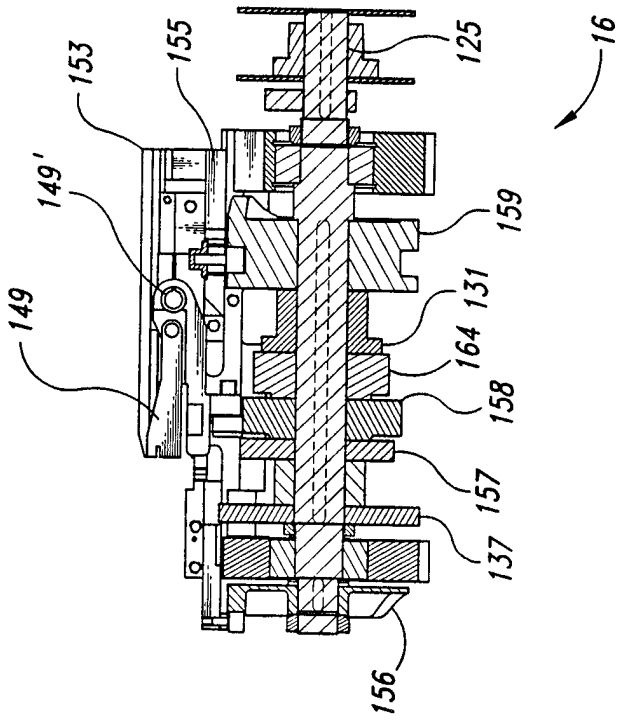
153
155
125
16
149'
159
149
131
164
158
157
137
156

Fig. 9B

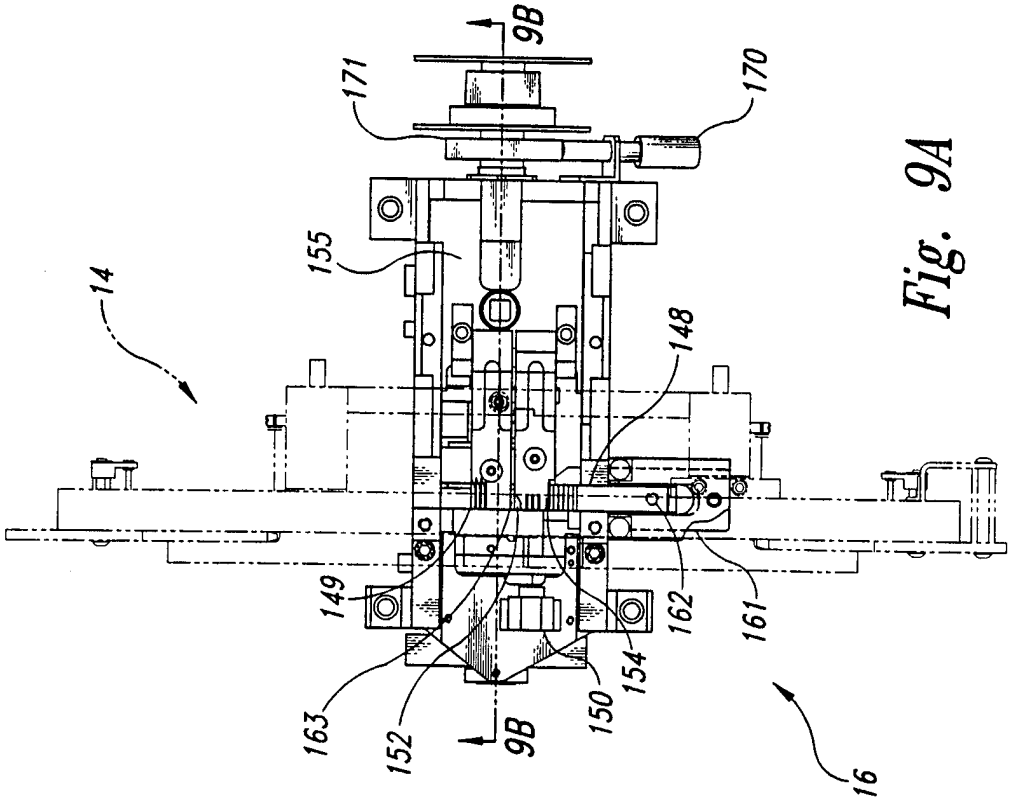
9B
171
170
155
14
148
149
162
161
154
163
152
150
9B
16

Fig. 9A

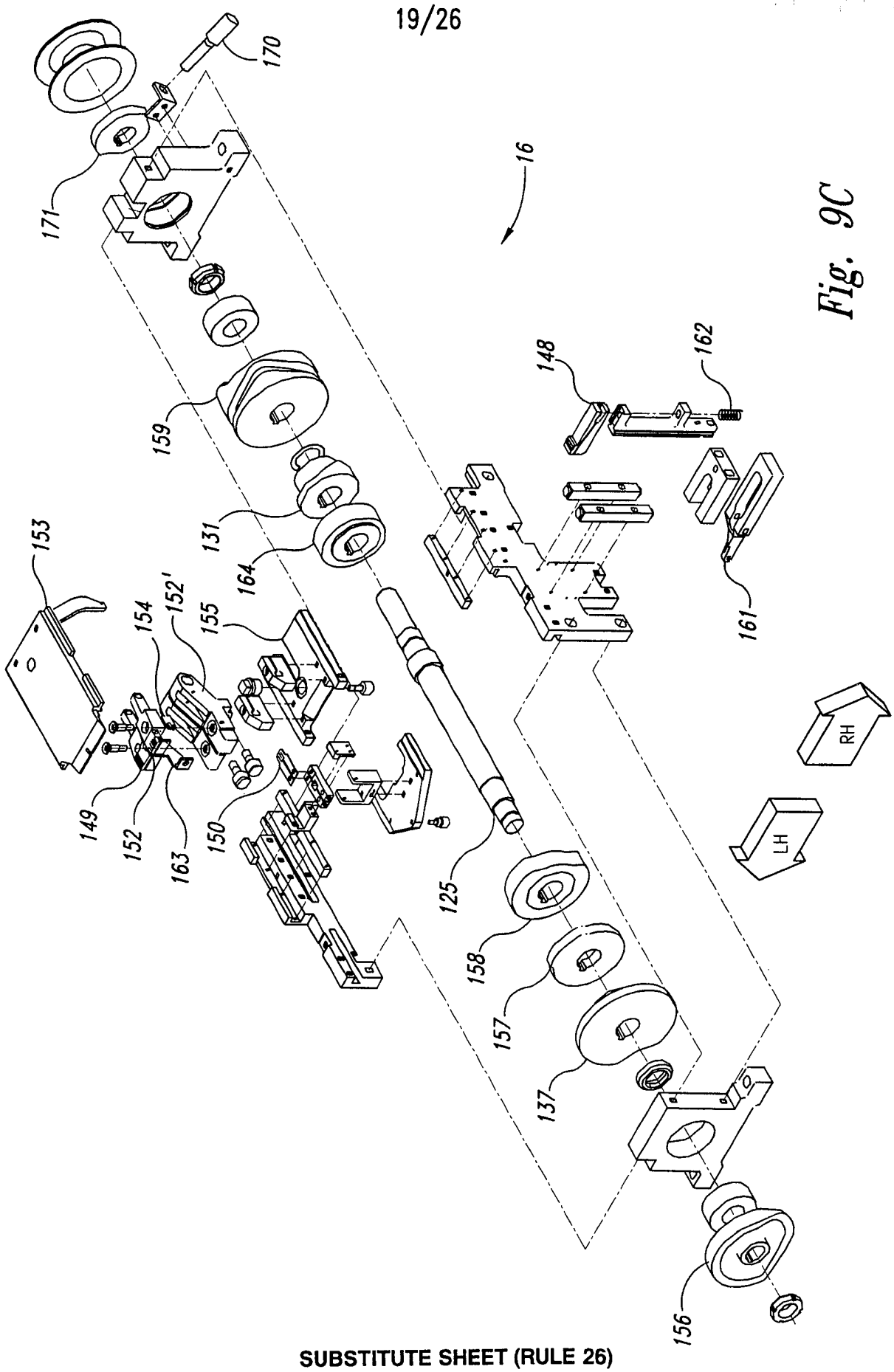
170
171
16
159
131
164
153
154
152'
155
149
152
163
150
125
158
157
137
156
148
162
161
RH
LH

Fig. 9C

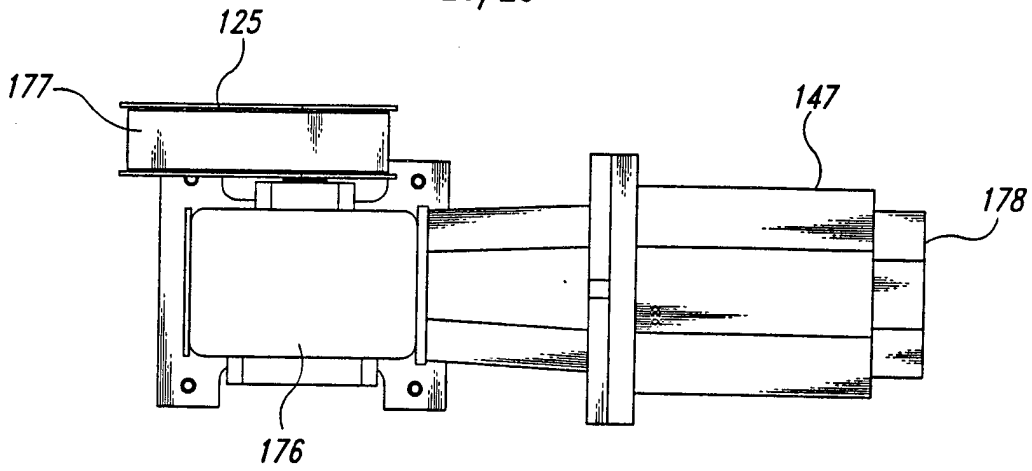

Fig. 10A

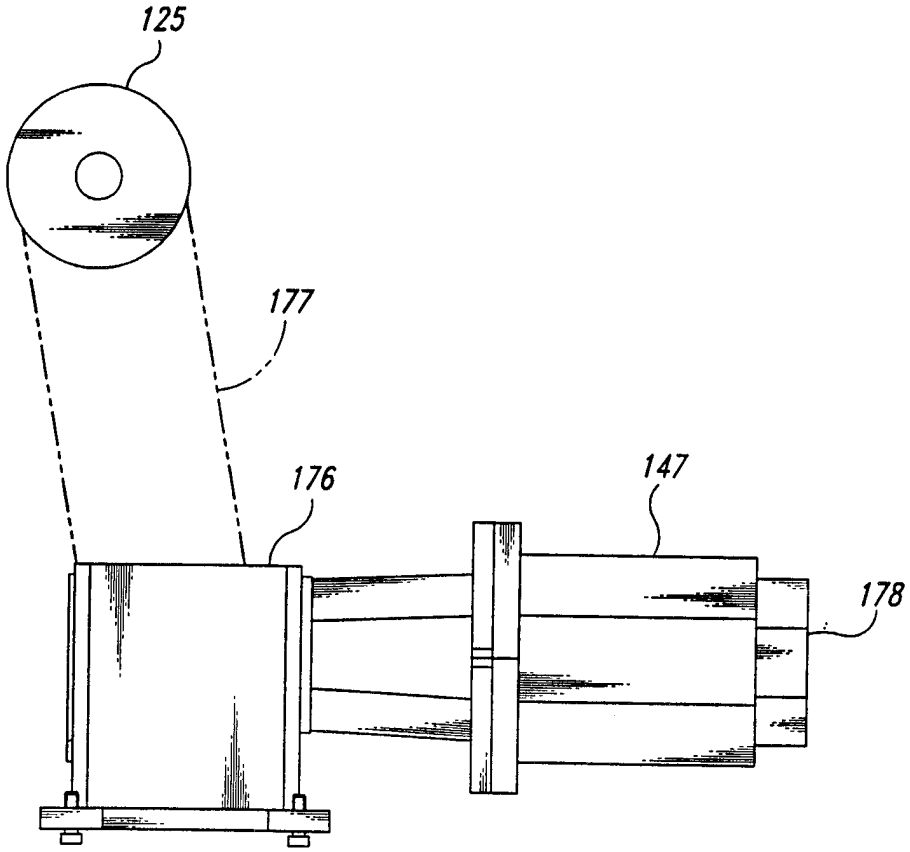

Fig. 10B

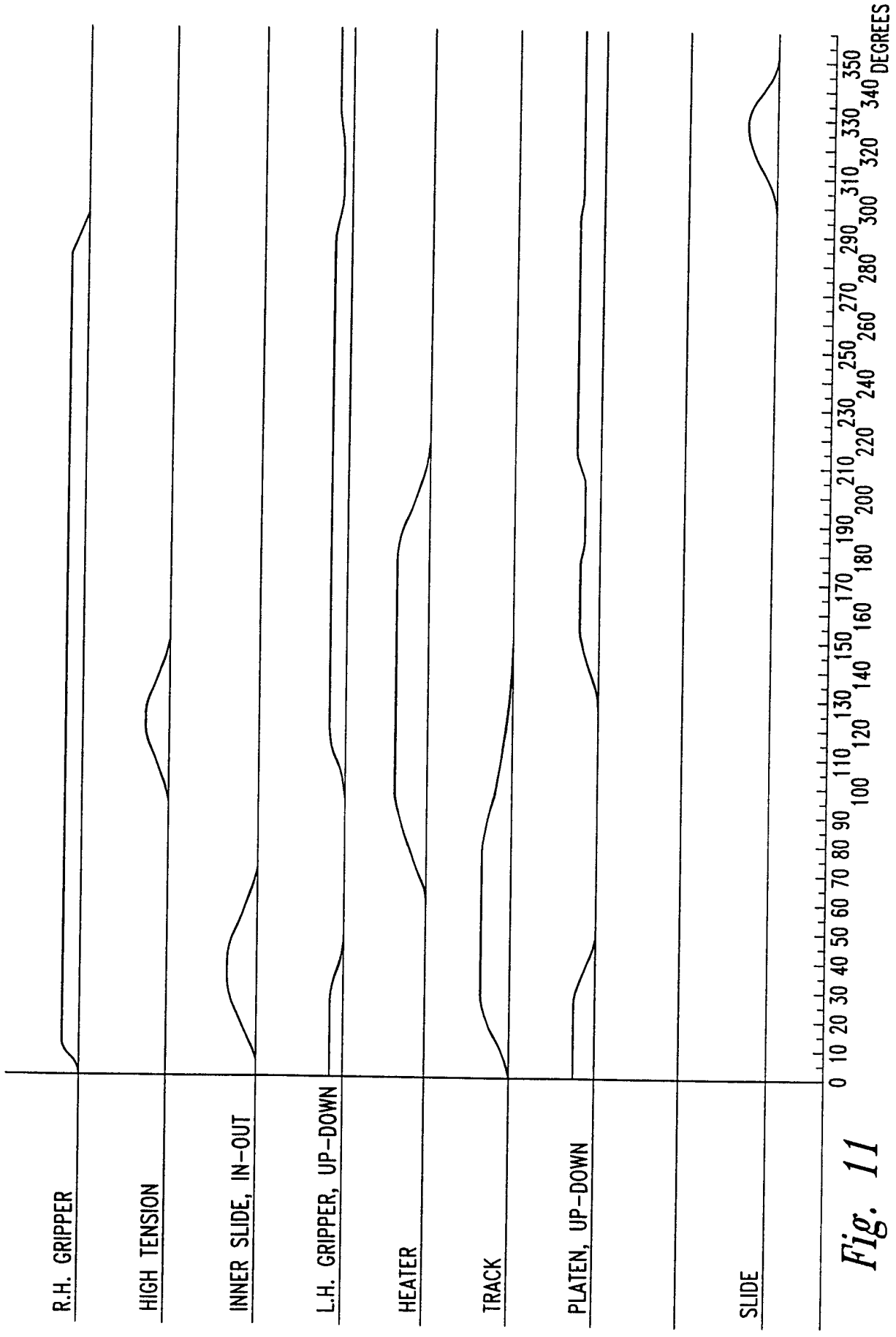
R.H. GRIPPER
HIGH TENSION
INNER SLIDE, IN-OUT
L.H. GRIPPER, UP-DOWN
HEATER
TRACK
PLATEN, UP-DOWN
SLIDE
0 10 20 30 40 50 60 70 80 90 100 110 120 130 140 150 160 170 180 190 200 210 220 230 240 250 260 270 280 290 300 310 320 330 340 350 DEGREES

Fig. 11

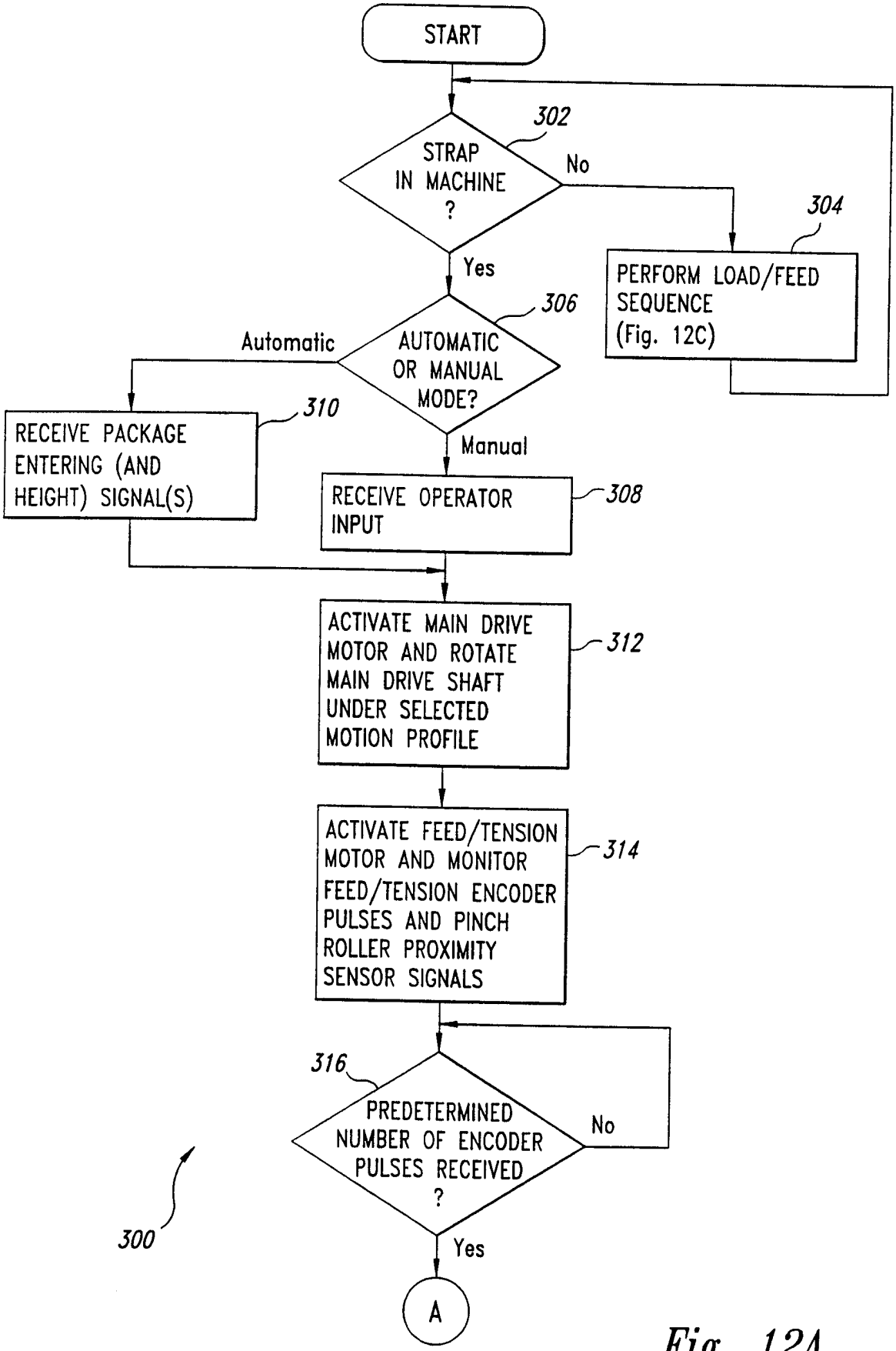
START
302
STRAP IN MACHINE ?
No
304
PERFORM LOAD/FEED SEQUENCE (Fig. 12C)
Yes
306
AUTOMATIC OR MANUAL MODE?
Automatic
Manual
310
RECEIVE PACKAGE ENTERING (AND HEIGHT) SIGNAL(S)
RECEIVE OPERATOR INPUT
308
ACTIVATE MAIN DRIVE MOTOR AND ROTATE MAIN DRIVE SHAFT UNDER SELECTED MOTION PROFILE
312
ACTIVATE FEED/TENSION MOTOR AND MONITOR FEED/TENSION ENCODER PULSES AND PINCH ROLLER PROXIMITY SENSOR SIGNALS
314
316
PREDETERMINED NUMBER OF ENCODER PULSES RECEIVED ?
No
Yes
A
300

Fig. 12A

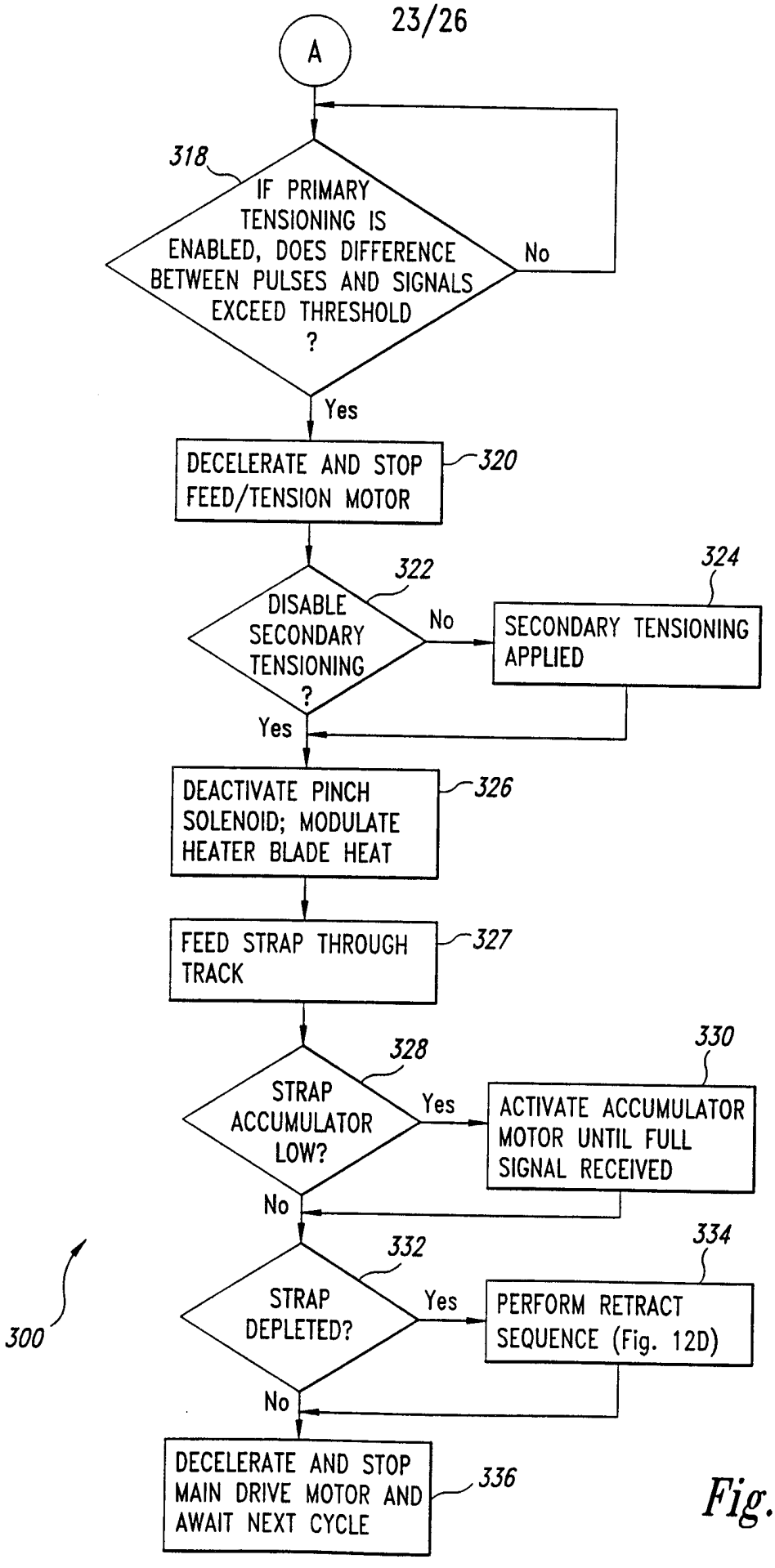
A
318
IF PRIMARY TENSIONING IS ENABLED, DOES DIFFERENCE BETWEEN PULSES AND SIGNALS EXCEED THRESHOLD ?
No
Yes
DECELERATE AND STOP FEED/TENSION MOTOR
320
322
DISABLE SECONDARY TENSIONING ?
No
324
SECONDARY TENSIONING APPLIED
Yes
DEACTIVATE PINCH SOLENOID; MODULATE HEATER BLADE HEAT
326
FEED STRAP THROUGH TRACK
327
328
STRAP ACCUMULATOR LOW?
Yes
330
ACTIVATE ACCUMULATOR MOTOR UNTIL FULL SIGNAL RECEIVED
No
332
STRAP DEPLETED?
Yes
334
PERFORM RETRACT SEQUENCE (Fig. 12D)
No
DECELERATE AND STOP MAIN DRIVE MOTOR AND AWAIT NEXT CYCLE
336
300

Fig. 12B

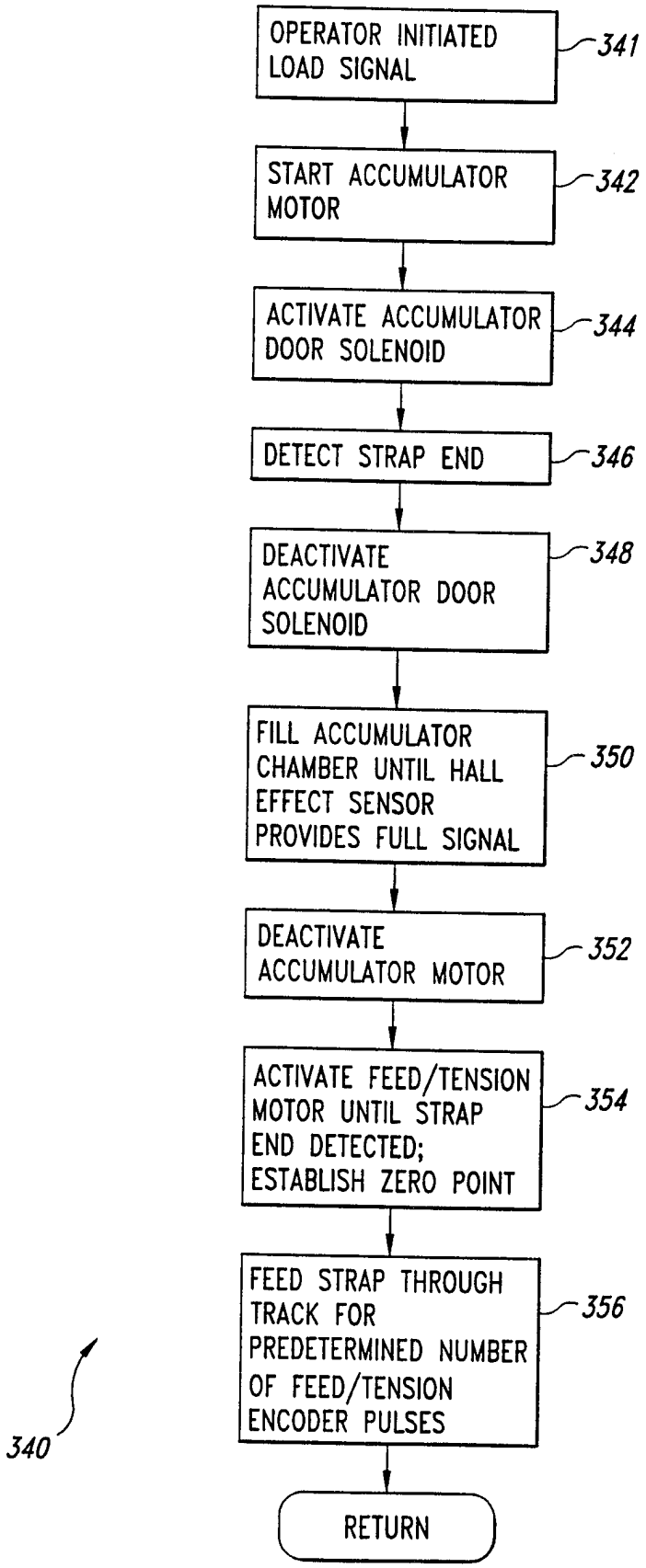
OPERATOR INITIATED LOAD SIGNAL
341
START ACCUMULATOR MOTOR
342
ACTIVATE ACCUMULATOR DOOR SOLENOID
344
DETECT STRAP END
346
DEACTIVATE ACCUMULATOR DOOR SOLENOID
348
FILL ACCUMULATOR CHAMBER UNTIL HALL EFFECT SENSOR PROVIDES FULL SIGNAL
350
DEACTIVATE ACCUMULATOR MOTOR
352
ACTIVATE FEED/TENSION MOTOR UNTIL STRAP END DETECTED; ESTABLISH ZERO POINT
354
FEED STRAP THROUGH TRACK FOR PREDETERMINED NUMBER OF FEED/TENSION ENCODER PULSES
356
340
RETURN

Fig. 12C

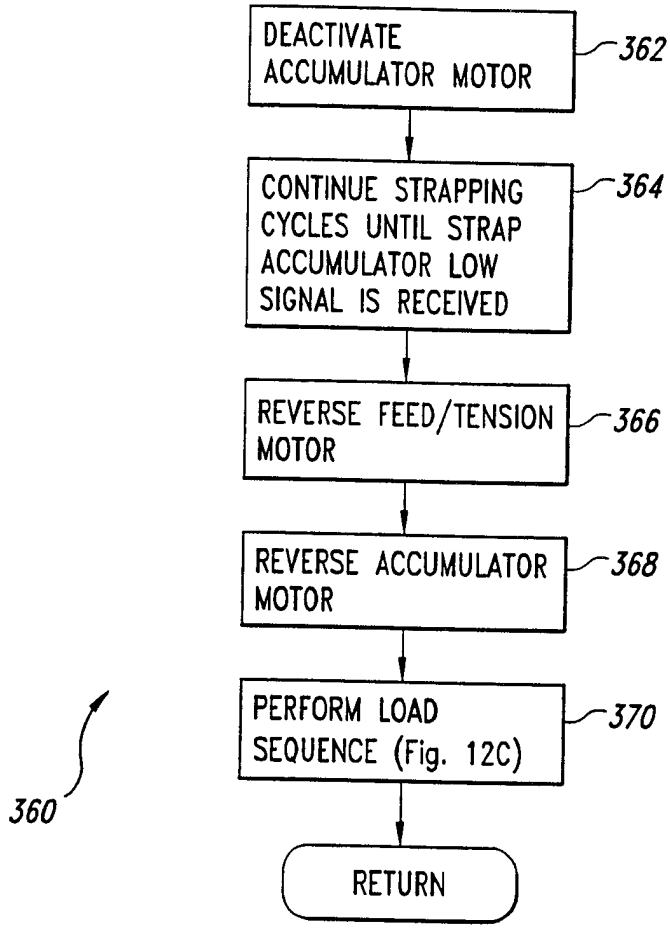
DEACTIVATE ACCUMULATOR MOTOR
362
CONTINUE STRAPPING CYCLES UNTIL STRAP ACCUMULATOR LOW SIGNAL IS RECEIVED
364
REVERSE FEED/TENSION MOTOR
366
REVERSE ACCUMULATOR MOTOR
368
PERFORM LOAD SEQUENCE (Fig. 12C)
370
RETURN
360

Fig. 12D

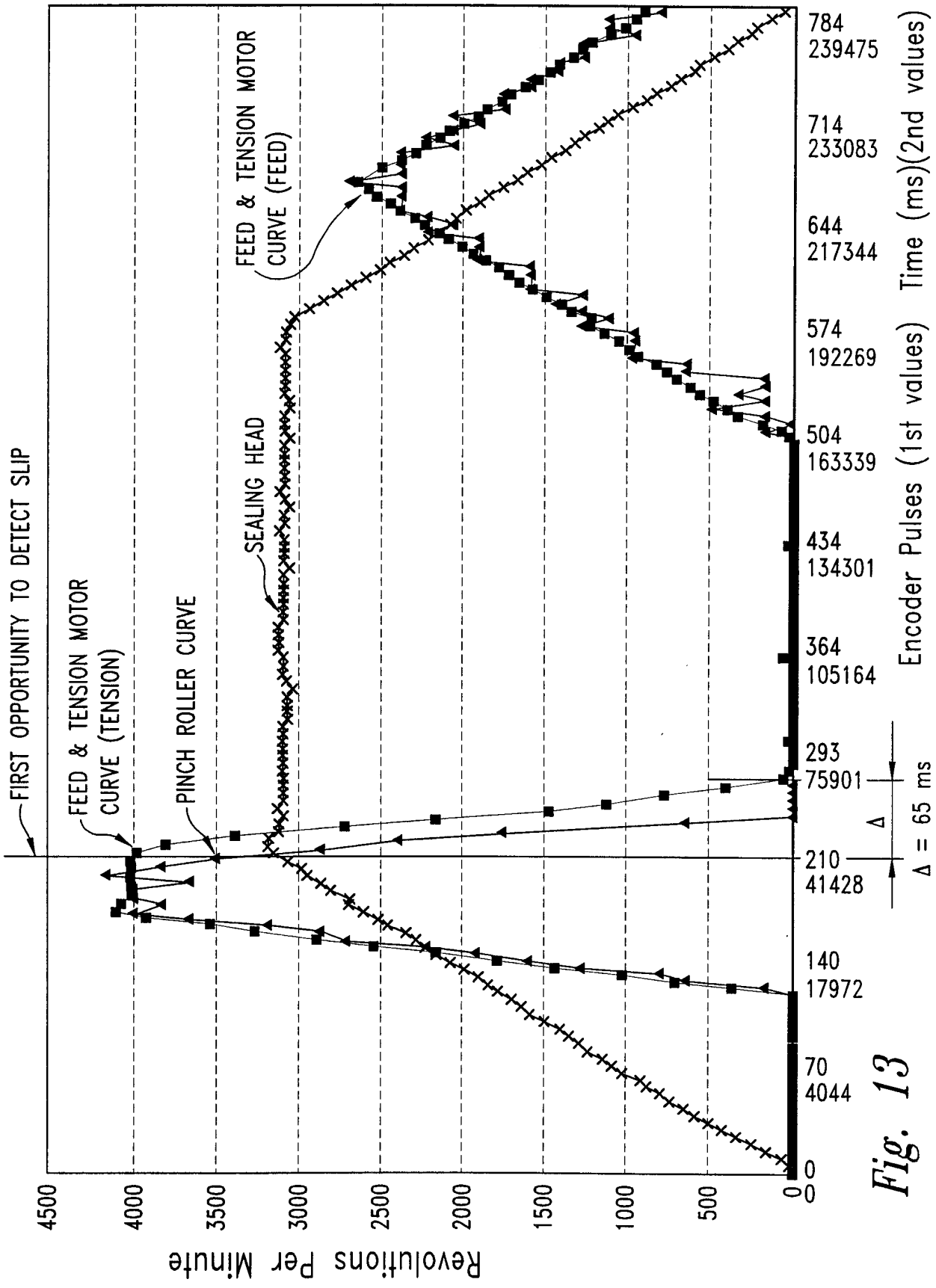
FIRST OPPORTUNITY TO DETECT SLIP
FEED & TENSION MOTOR CURVE (TENSION)
PINCH ROLLER CURVE
SEALING HEAD
FEED & TENSION MOTOR CURVE (FEED)
Revolutions Per Minute
4500
4000
3500
3000
2500
2000
1500
1000
500
0
Encoder Pulses (1st values) Time (ms)(2nd values)
784
239475
714
233083
644
217344
574
192269
504
163339
434
134301
364
105164
293
75901
210
41428
140
17972
70
4044
0
0
Δ
Δ = 65 ms

Fig. 13

INTERNATIONAL SEARCH REPORT

International application No.
PCT/US 97/20879

A. CLASSIFICATION OF SUBJECT MATTER

IPC6: B65B 13/00, B65B 27/00
According to International Patent Classification (IPC) or to both national classification and IPC

B. FIELDS SEARCHED

Minimum documentation searched (classification system followed by classification symbols)

IPC6: B65B

Documentation searched other than minimum documentation to the extent that such documents are included in the fields searched

Electronic data base consulted during the international search (name of data base and, where practicable, search terms used)

WPIL

C. DOCUMENTS CONSIDERED TO BE RELEVANT

Category*	Citation of document, with indication, where appropriate, of the relevant passages	Relevant to claim No.
Y	US 3884139 A (PASIC), 20 May 1975 (20.05.75) --	1,6,12,20
A	US 4120239 A (PASIC ET AL), 17 October 1978 (17.10.78) --	1,6,12,20
A	WO 9510452 A1 (SUNDS DEFIBRATOR INDUSTRIES AB), 20 April 1995 (20.04.95), page 1, line 28 - page 2, line 7; page 2, line 23 - line 30; page 3, line 29 - line 35 --	1-27
Y	US 4712357 A (CRAWFORD ET AL), 15 December 1987 (15.12.87) --	1,6,12,20

[X] Further documents are listed in the continuation of Box C. [X] See patent family annex.

* Special categories of cited documents:
"A" document defining the general state of the art which is not considered to be of particular relevance
"E" erlier document but published on or after the international filing date
"L" document which may throw doubts on priority claim(s) or which is cited to establish the publication date of another citation or other special reason (as specified)
"O" document referring to an oral disclosure, use, exhibition or other means
"P" document published prior to the international filing date but later than the priority date claimed
"T" later document published after the international filing date or priority date and not in conflict with the application but cited to understand the principle or theory underlying the invention
"X" document of particular relevance: the claimed invention cannot be considered novel or cannot be considered to involve an inventive step when the document is taken alone
"Y" document of particular relevance: the claimed invention cannot be considered to involve an inventive step when the document is combined with one or more other such documents, such combination being obvious to a person skilled in the art
"&" document member of the same patent family

Date of the actual completion of the international search	Date of mailing of the international search report
18 March 1998	28.04.98
Name and mailing address of the ISA/ European Patent Office, P.B. 5818 Patentlaan 2 NL-2280 HV Rijswijk Tel. (+ 31-70) 340-2040, Tx. 31 651 epo nl, Fax: (+ 31-70) 340-3016	Authorized officer Kristina Pederson

Form PCT/ISA/210 (second sheet) (July 1992)

INTERNATIONAL SEARCH REPORT

International application No.
PCT/US 97/20879

C (Continuation). DOCUMENTS CONSIDERED TO BE RELEVANT

Category*	Citation of document, with indication, where appropriate, of the relevant passages	Relevant to claim No.
A	US 5412845 A (UEDING ET AL), 9 May 1995 (09.05.95), column 4, line 6 - line 9, abstract	1,6,12,20
A	DE 3841884 A1 (BERGWERKSVERBAND GMBH), 21 June 1990 (21.06.90), abstract	1,6,12,20
A	US 5187656 A (KURAKAKE), 16 February 1993 (16.02.93)	1-27
A	GB 2226427 A (FMC CORPORATION), 27 June 1990 (27.06.90), abstract	1-27

INTERNATIONAL SEARCH REPORT

Information on patent family members

02/03/98

International application No.
PCT/US 97/20879

Patent document cited in search report	Publication date	Patent family member(s)	Publication date
US 3884139 A	20/05/75	CA 989710 A	25/05/76
US 4120239 A	17/10/78	NONE	
WO 9510452 A1	20/04/95	AU 683501 B	13/11/97
		AU 7952394 A	04/05/95
		BR 9407788 A	18/03/97
		CA 2171306 A	20/04/95
		CN 1133026 A	09/10/96
		EP 0722405 A	24/07/96
		FI 961616 A	12/04/96
		JP 9503729 T	15/04/97
		NO 961473 A	12/04/96
		NZ 275526 A	22/09/97
		SE 9303380 A	20/04/95
US 4712357 A	15/12/87	AU 580172 B	05/01/89
		AU 5880986 A	30/04/87
		CA 1263595 A	05/12/89
		CH 674968 A	15/08/90
		DE 3621556 A,C	30/04/87
		FR 2589127 A	30/04/87
		GB 2183366 A,B	03/06/87
		JP 62109712 A	20/05/87
		NL 8601525 A	18/05/87
US 5412845 A	09/05/95	CZ 9301999 A	18/05/94
		DE 4234713 A	21/04/94
		EP 0592799 A,B	20/04/94
		JP 7257816 A	09/10/95
		DE 59301161 D	00/00/00
DE 3841884 A1	21/06/90	NONE	
US 5187656 A	16/02/93	DE 3587626 D,T	10/02/94
		EP 0207168 A,B	07/01/87
		JP 61150686 A	09/07/86
		WO 8603854 A	03/07/86

INTERNATIONAL SEARCH REPORT

Information on patent family members

02/03/98

International application No.
PCT/US 97/20879

Patent document cited in search report	Publication date	Patent family member(s)	Publication date
GB 2226427 A	27/06/90	AU 625694 B	16/07/92
		AU 4266989 A	17/05/90
		BE 1002988 A	15/10/91
		CA 1329034 A	03/05/94
		DE 3937536 A	17/05/90
		FR 2638676 A,B	11/05/90
		FR 2638677 A,B	11/05/90
		FR 2696678 A,B	15/04/94
		GB 2227236 A	25/07/90
		IT 1237133 B	24/05/93
		JP 2172720 A	04/07/90
		JP 2632733 B	23/07/97
		US 5094656 A	10/03/92
		AU 4267089 A	17/05/90
		DE 3937509 A	17/05/90
		FR 2638678 A	11/05/90
		IT 2219489 D	00/00/00
		JP 2172725 A	04/07/90
		AU 616804 B	07/11/91
		AU 4267189 A	17/05/90
		BE 1002989 A	15/10/91
		CA 1313789 A	23/02/93
		DE 3937508 A	17/05/90
		IT 1237134 B	24/05/93
		JP 2178030 A	11/07/90
		JP 2632734 B	23/07/97
		US 5000727 A	19/03/91
		US 5230688 A	27/07/93