(12) UK Patent Application (19) GB (11) 2 251 702 (13) A

(43) Date of A publication 15.07.1992

(21) Application No 9125508.3

(22) Date of filing 29.11.1991

(30) Priority data
(31) 9026021 (32) 29.11.1990 (33) GB

(71) Applicant
Derek Glick
16 Stonehall Avenue, Ilford, Essex, IG1 3SH,
United Kingdom

(72) Inventor
Derek Glick

(74) Agent and/or Address for Service
King's Patent Agency Limited
73 Farringdon Road, London, EC1M 3JB,
United Kingdom

(51) INT CL[5]
G02C 9/04

(52) UK CL (Edition K)
G2J JS2A2 JS2A2A1

(56) Documents cited
GB 1515828 A GB 1010353 A EP 0238479 A
EP 0128735 A US 4961639 A US 3876295 A
US 3531188 A

(58) Field of search
UK CL (Edition K) G2J JS2A2
INT CL[5] G02C

(54) Spectacles attachment

(57) An attachment for spectacles adapting them for use with VDU's, the attachment (1) comprising two similar lenses (2) of about 1.25 diopters power held in side-by-side coplanar relationship by a bridging member (3) secured to each lens by screw fasteners (4). The bridging member (3) is pivotally connected to a clip member (5) carried by a clamp (6) by which the attachment may be secured to the nose bridge (7) of a pair of spectacles (8).

The pivotal connection between the bridge member (3) and clip member (5) is arranged to allow the lens (2) to be swung up through 90° from the position shown in Figure 1 into an out-of-view position as shown in Figure 2.

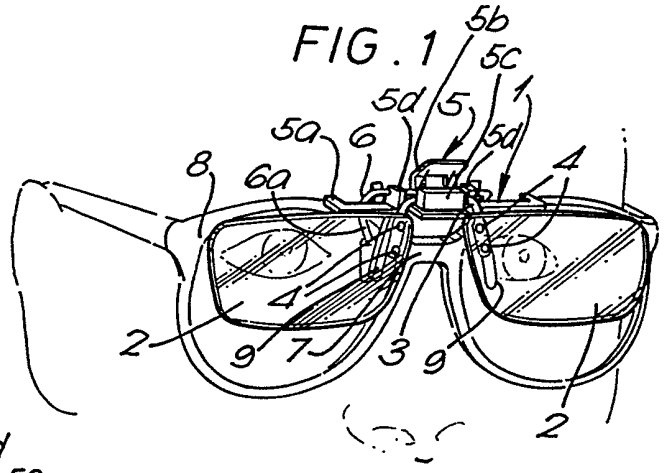

FIG. 1

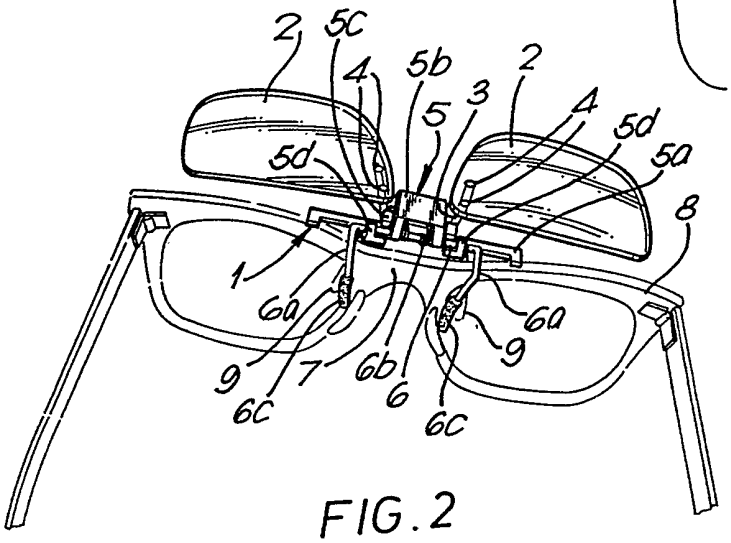

FIG. 2

GB 2 251 702 A

FIG. 1

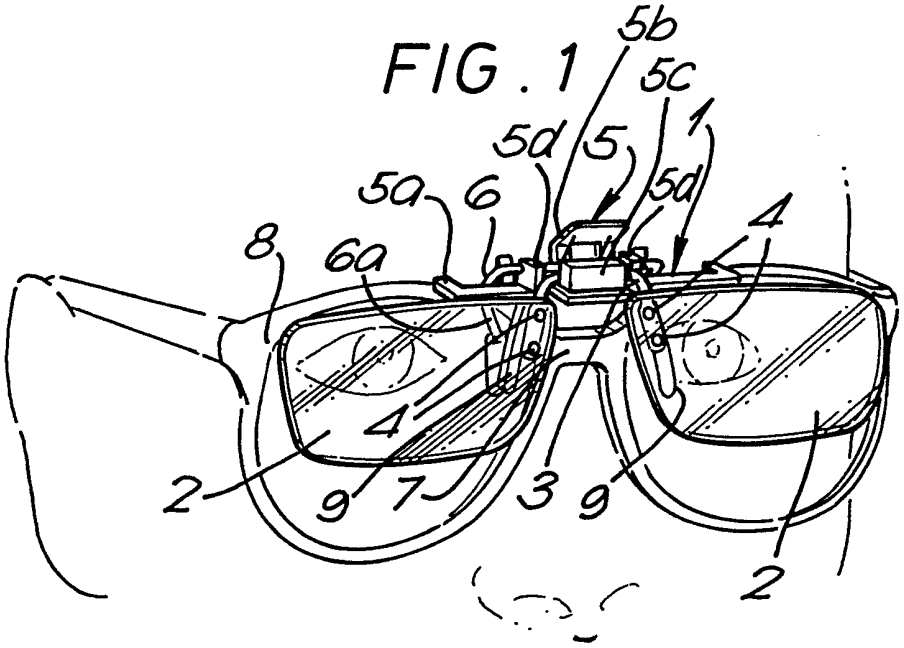
5b
5c
1
5d
5
5d
5a
6
4
8
6a
4
2
9
7
3
9
2

FIG. 3

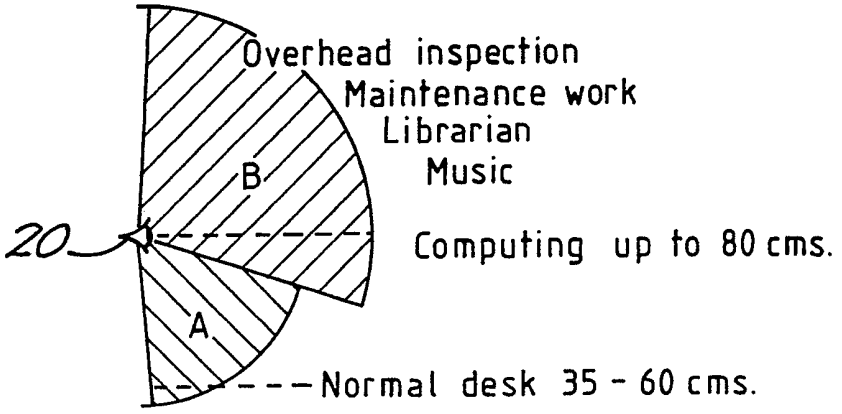
Overhead inspection
Maintenance work
Librarian
Music
B
20
Computing up to 80 cms.
A
Normal desk 35 - 60 cms.

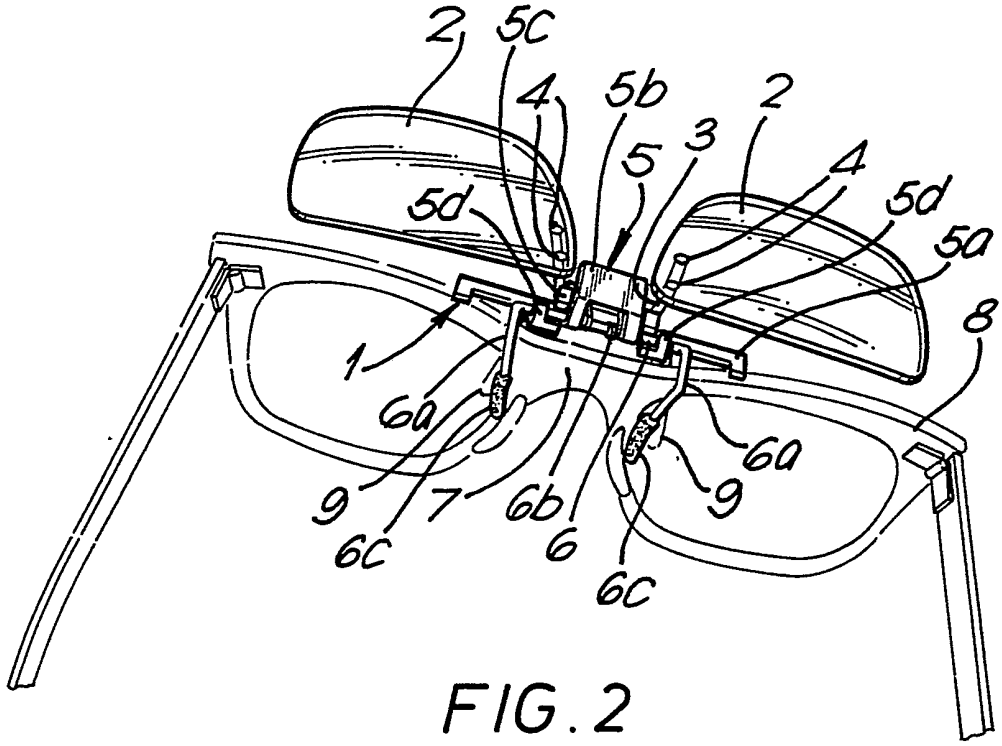

FIG. 2

Improvements in Spectacles

This invention relates to improvements in spectacles and is primarily, but not essentially, concerned with spectacles for use with visual and video display units such as terminal units of computer systems.

It is a normal process for people in their mid-40s to start experiencing difficulties with their near sight. They may resort to wearing bifocals at work if they need to see clearly in the distance as well as doing close work. The reason for this is that reading glasses often blur the distance vision.

With the swing towards computing and display screens of various formats many users in this category are finding they have to tilt their head back to see the displays. Even when this is done, quite often the screen is still not clear as the normal reading lenses are more powerful and designed only for the closer task of normal desk work.

It is an object of this invention to provide means to convert the distance lenses to the correct power for most screens which will be viewed at distances between 60 to 80 cms and which will eliminate the need for head

tilt.

It is a further object to provide such means, primarily but not essentially, for use by wearers of bifocal lenses.

According to this invention there is provided an attachment for spectacles comprising a pair of supplementary lenses joined by a bridge member in side by side coplanar relationship, said bridge member being pivotally or hingedly connected to a clip member, said clip member having clamp means to secure same adjacent the nose bridge of a pair of spectacles whereby the lenses may be swung from a position wherein each overlies in juxtaposed parallel relationship a respective spectacle lens, to a position in which each supplementary lens extends forwardly substantially at right angles to a spectacle lens.

Preferably each supplementary lens overlies an upper portion only of each spectacle lens. The supplementary lens is advantageously arranged such that, relative to the field of view seen by the eye, it overlies the area extending from just below the horizontal medial plane to the upper limit of useful vision.

The range of powers of the supplementary lenses will typically lie between +1.00 to 1.75 Diopter (spherical). (+1.25 being a preferred standard power.)

Around the age of 45 years the average normal eye, even if it has perfect distance vision, will start to experience difficulty focusing at the normal reading range. The spectacle lenses that correct this condition (called presbyopia) make the near vision clearer, but blur the distance vision in varying degrees, depending on their power. As the power increases it often becomes impossible for the person to view normal printed material on a desk at say 40 cms away and also see a display at 70 cms with the same lenses. This can make life very difficult.

This invention provides an attachment to be placed onto the persons existing distance glasses and it will focus the eyes at the correct distance for the display screen (which is further away than normal reading). It is designed to cover a substantial area of the upper part of the wearer's spectacles.

If a person is a bifocal wearer then they often experience two problems when working on a display screen. The first one may be that the reading portion of the bifocal is too strong for the greater viewing distance involved and so the screen is blurred. The second problem is that the screen is set higher so that a normal bifocal would not cover it. This can only be covered by straining the chin upwards, an action which is neither

comfortable nor good for the neck. This is normally dealt with in one of two ways.

If the person just works on the screen and does not need to refer to text closer than that, then it is possible to make a pair of spectacles of single vision lenses of the correct power for the screen. This is the cheapest answer, but they will still involve the wearer or his employer in paying for the sight test, the frames and the lenses. The glasses will need to be changed when looking away from the screen.

If the wearer needs to see close text and the further display then he will need bifocals which are constructed with normal reading power at the bottom but with a weaker reading power in the top, instead of the usual distance power. These are even more costly and also need to be removed when looking across the room or getting up from the desk.

This invention has the advantages that if the person clips the attachment over their own distance prescription then this is technically accurate and a precise correction for the screen situated in the ranges of intermediate vision. A wearer of normal bifocals will be able to convert them to the correct powers for screen work/desk work at will without having to have specialised bifocals made. Even if the person's basic eyesight

changes, the attachment can be just transferred to their new spectacles.

A further advantage is that the means of this invention can be quickly pivoted to an out-of-use position.

The attachment has a matched pair of positive power lenses of such power that they are the equivalent to the optical addition that is needed to convert distance spectacles for the longer than normal near range needed by display screens as described.

The invention is further described and illustrated with reference to the drawings showing an embodiment by way of example. In the drawings:-

Figure 1 shows in front view one embodiment of attachment according to this invention,

Figure 2 shows a rear view of the attachment of Figure 1, and

Figure 3 shows a field of view diagram.

Referring to the drawings, the attachment 1 comprises two similar lenses 2 of about 1.25 diopters power held in side-by-side coplanar relationship by a bridging member 3 secured to each lens by screw fasteners 4. The bridging member 3 is pivotally connected to a clip member 5 carried by a clamp 6 by which the attachment may be secured to the nose bridge 7 of a pair

of spectacles 8.

The pivotal connection between the bridge member 3 and clip member 5 is arranged to allow the lens 2 to be swung up through 90° from the position shown in Figure 1 into an out-of-view position as shown in Figure 2.

The clamp 5 has a horizontal abutment bar 5a with fingers 9 to which is pivotally attached clamp 6 having two spaced fingers 6a. The clamp 6 is attached to a press tab 5b which causes the clamp 6 to pivot outwards on applied finger pressure against spring 6b. The attachment, by this means, may be installed or removed on the spectacle nose bridge 7.

The ends of finger 6a may include a resilient protective layer 6c. The bridge member 3 lies in a channel defined between a forward abutment 5c and rearward abutments 5d of the clamp 5. The bridge member toggles between the two positions by virtue of a flat part which co-operates with the tail end of spring 6b (not shown).

Each supplementary lens 2 only overlies a certain area of the lens of the spectacles 8 defined by the field of view as shown in Figure 3. As may be seen the area B lying within the field of view of the eye 20 is covered by the supplementary lens 2 whereas the area A is unaffected and subject only to the normal spectacle lens

8.

The advantage of this arrangement, achieved by careful selection and experiment of the area of coverage and power, is that a comfortable focusing distance of up to 80 cms is achieved for viewing a VDU or music whereas a normal desk viewing distance of about 35 to 60 cms is still available, through the lower uncovered portion of the normal bifocals.

The supplementary lenses will conveniently be of small size and of plastic for reduced weight.

CLAIMS

1. An attachment for spectacles comprising a pair of supplementary lenses joined by a bridge member in side by side coplanar relationship, said bridge member being pivotally or hingedly connected to a clip member, said clip member having clamp means to secure same adjacent the nose bridge of a pair of spectacles whereby the lenses may be swung from a position wherein each overlies in juxtaposed parallel relationship a respective spectacle lens, to a position in which each supplementary lens extends forwardly substantially at right angles to a spectacle lens.

2. An attachment according to Claim 1 wherein, in use, each supplementary lens overlies an upper portion only of each spectacle lens.

3. An attachment according to Claim 2, wherein in use, each supplementary lens is arranged such that, relative to the field of view seen by the eye, it overlies the area extending from just below the horizontal medial plane to the upper limit of useful vision.

4. An attachment according to any preceding claim, wherein the power of each supplementary lens is between +1.00 and +1.75 Diopter (spherical).

5. An attachment according to any preceding claim wherein a horizontal part of the bridge member is located in a channel provided in the clip member, said channel providing a toggle action whereby the supplementary lenses are urged into either said overlying position or said forwardly extending position.

6. An attachment according to any preceding claim, wherein the clip member comprises a horizontal bar to abut the front frame of a pair of spectacles and a clamp member pivotally attached to said bar, said clamp member being displaceable, against pressure of a spring, by a tab whereby the clamp may be attached to or removed from a pair of spectacles.

7. An attachment for the purpose herein set forth, substantially as described and exemplified with reference to the drawings.

atents Act 1977
Examiner's report to the Comptroller under Section 17 (The Search Report)

10

Application number

9125508.3

Relevant Technical fields

(i) UK Cl (Edition K) G2J (JS2A2)

(ii) Int Cl (Edition 5) G02C

Search Examiner

M K B REYNOLDS

Databases (see over)

(i) UK Patent Office

(ii)

Date of Search

2 APRIL 1992

Documents considered relevant following a search in respect of claims

Category (see over)	Identity of document and relevant passages	Relevant to claim(s)
X	GB 1515828 (NANNINI) figures and pages 2-3	1-4,6
X	GB 1010353 (AMERICAN OPTICAL) figures	1-4,6
X	US 4961639 (LAZARUS) figures 6-7, column 5	1-4,6
X	US 3876295 (LEBLANC) figures	1-6
X	US 3531188 (LOUGHNER) figure, columns 2-3	1-6
X	EP 238479 A (POLAROID)	1-4
X	EP 128735 A (POLAROID)	1-4,6

SF2(p)

lme - c:\wp51\doc99\fil000601

Category	Identity of document and relevant passages	Relevant to claim(s)

Categories of documents

X: Document indicating lack of novelty or of inventive step.

Y: Document indicating lack of inventive step if combined with one or more other documents of the same category.

A: Document indicating technological background and/or state of the art.

P: Document published on or after the declared priority date but before the filing date of the present application.

E: Patent document published on or after, but with priority date earlier than, the filing date of the present application.

&: Member of the same patent family, corresponding document.

Databases: The UK Patent Office database comprises classified collections of GB, EP, WO and US patent specifications as outlined periodically in the Official Journal (Patents). The on-line databases considered for search are also listed periodically in the Official Journal (Patents).

Published 1992 at The Patent Office, Concept House, Cardiff Road, Newport, Gwent NP9 1RH. Further copies may be obtained from Sales Branch, Unit 6, Nine Mile Point, Cwmfelinfach, Cross Keys, Newport, NP1 7HZ. Printed by Multiplex techniques ltd, St Mary Cray, Kent.