March 31, 1964 A. GUTTAG 3,127,373

POLYOXYALKYLATED PHENOL-KETONE AND PHENOL-ALDEHYDE PHOSPHOROUS CONTAINING RESINS

Filed Oct. 17, 1961

Fig. 1.

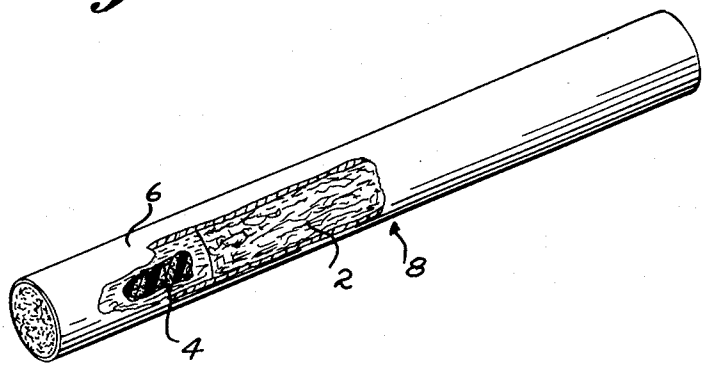


Fig. 2.

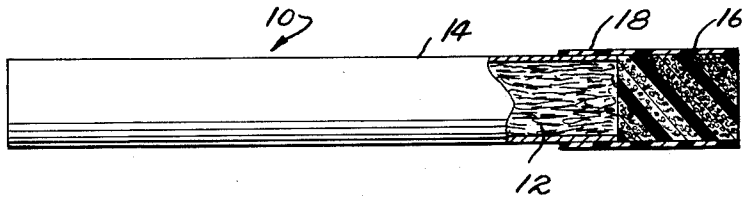


Fig. 3.

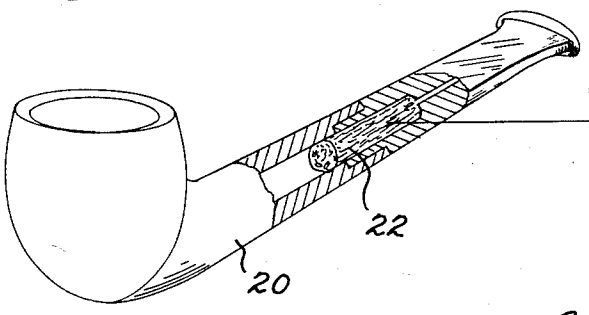


Fig. 4.

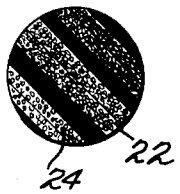


INVENTOR

ALVIN GUTTAG

BY Cushman, Darby & Cushman

ATTORNEYS

United States Patent Office 3,127,373 Patented Mar. 31, 1964



3,127,373

# POLYOXYALKYLATED PHENOL-KETONE AND PHENOL-ALDEHYDE PHOSPHOROUS CONTAINING RESINS

Alvin Guttag, Bethesda, Md., assignor, by mesne assignments, to Union Carbide Corporation, a corporation of New York

Filed Oct. 17, 1961, Ser. No. 145,575
18 Claims. (Cl. 260—50)

This invention relates to tobacco filters and to novel phosphites and polyurethanes.

It is an object of the present invention to prepare tobacco filters from foamed polymers.

Another object is to enhance the flame resistance of polyurethane filters for tobacco.

A further object is to make novel phosphorus esters of phenol-aldehyde reaction products.

An additional object is to make novel phosphite esters of phenol-aldehyde resins.

A still further object is to prepare novel phosphates and thiophosphates of phenol-aldehyde reaction products.

Yet another object is to prepare novel polymers from phosphorus containing phenol-aldehyde resins.

An additional object is to prepare polyurethanes having improved fire and flame resistance.

A still further object is to prepare foamed polyurethanes from phenol-aldehyde reaction products, e.g., phenol-aldehyde resins, having phosphorus containing groupings.

Still further objects and the entire scope of applicability of the present invention will become apparent from the detailed description given hereinafter; it should be understood, however, that the detailed description and specific examples, while indicating preferred embodiments of the invention, are given by way of illustration only, since various changes and modifications within the spirit and scope of the invention will become apparent to those skilled in the art from this detailed description.

This application is a continuation-in-part of application Serial No. 124,019, filed July 14, 1961. The entire disclosure of the parent application is hereby incorporated.

Various filters for tobacco smoke have been proposed in the past. Thus, it has been proposed to employ polyurethane cellular plastics as tobacco smoke filters, Winkler Patent 2,770,241. Such polyurethanes and particularly polyurethanes prepared from polyethers have unsatisfactory flame resistance. It has now been found that by employing a phosphorus containing organic reactant as one of the components for preparing the polyurethane that the flame resistance of the filter is greatly enhanced. Polyurethanes prepared from polyethers which previously were unsuited for use as filters can be employed satisfactorily as a result of the present invention. The phosphorus substituent also stabilizes the polyurethane.

In the accompanying drawings which illustrate the invention.

FIGURE 1 is a partially broken away perspective view of a cigarette having a filter according to the invention;

FIGURE 2 is an elevation, partially broken away and in section of a different embodiment of the invention utilizing a cigarette;

FIGURE 3 is a view in elevation, partially broken away and in section, of a smoking pipe embodying the present invention; and

FIGURE 4 is an enlarged section of a portion of the filter of FIGURE 3.

Referring more specifically to FIGURE 1 there is provided a cigarette designated generally at **8** comprising tobacco **2** and foamed polyurethane filter **4** (e.g., the foamed reaction product of tris (dipropylene glycol) phosphite and toluene diisocyanate), encased in an overall outer paper wrapper **6**.



As shown in FIGURE 2 a cigarette **10** has tobacco **12** encased in paper wrapper **14** and foamed phosphorus containing polyurethane filter **16**. In this embodiment of the invention the paper does not encase the filter. Instead the filter has a skin **18** of unfoamed polyurethane. The skin can be formed during the foaming of the polyurethane in conventional fashion. The unfoamed skin prevents the escape of smoke from the sides of the filter when the cigarette is smoked. The skin **18** can be united to the paper wrapper **14** with an adhesive. More preferably the skin is heated briefly to soften it sufficiently that it will adhere directly to the paper. Instead of the unfoamed polyurethane skin extending slightly beyond the foamed polyurethane and being external to the wrapper at the union, the paper can extend slightly beyond the tobacco and be external to the unfoamed polyurethane skin at the union.

FIGURE 3 shows a smoking pipe **20** having a filter **22** of foamed polyurethane. The foamed polyurethane has particles **24** of cation exchange resin and anion exchange resin dispersed therethrough to assist in the removal of objectionable matter, e.g., carcinogenic compounds, nicotine and the like, from the smoke. While either cation exchange resins or anion exchange resins can be used alone, preferably both types of resins are employed together. To insure thorough dispersal of the ion exchange resins through the foamed polyurethane the ion exchange material is mixed with at least one of the polyurethane forming materials, e.g., with the tris (dipropylene glycol) phosphite prior to foaming. As a result in the foaming operation the ion exchange material becomes thoroughly dispersed throughout the foamed polyurethane.

As ion exchange resins there can be employed cation exchange resins containing phenolic, carboxyl, sulfonic or phosphonic acid groups.

The cation exchange resin can be in either the free acid or salt form, e.g., in the form of the sodium salt. Examples of such resins include sulfonated styrenedivinylbenzene copolymer (available commercially as Dowex 50 and Amberlite IR–120) and the other sulfonated resins shown in D'Alelio Patent 2,366,007, sulfonated phenol-formaldehyde resin, methacrylic acid-ethylene glycol methacrylate copolymer; acrylic acid-ethylene glycol-vinylacetate copolymer and the carboxylic acid resins disclosed in D'Alelio Patent 2,340,111, styrene phosphonic acid-divinylbenzene copolymer and other copolymers of an alkenylaryl phosphonic acid and a cross linking agent containing at least two ethylenically or acetylenic unsaturated bonds, e.g., having at least two vinylidene groups.

As the anion-exchange resin there can be used phenol-polyalkylene polyamine-formaldehyde resins, e.g., phenol-tetraethylenepentamine formaldehyde resin, quaternary ammonium compounds prepared by reacting a tertiary amine with a haloalkylated cross-linked copolymer of a monovinyl hydrocarbon and a polyvinyl hydrocarbon, e.g., the reaction product of trimethylamine with a chloromethylated, cross-linked copolymer of 92% styrene and 8% divinylbenzene Amberlite IRA–400), or the reaction product of triethylenetetramine with chloromethylated copolymer of 92% styrene and 8% divinylbenzene IR–45). There can be used any of the cation or anion exchange resins disclosed in Blank Patent 2,800,903 or Eirich Patent 2,739,598 or in any of the patents referred to in Blank or cited against Eirich.

The ion exchange resins of course should be of small particle size, e.g., 50 mesh or smaller (Tyler sieve series).

The foamed polyurethanes can be made as either open or closed cell foams. While for many uses closed cell

foams are preferred, in the case of cigarette filters there normally are employed open cell foams.

There can be employed conventional polyurethanes made from the reaction product of an organic polyisocyanate and polyol containing polyesters or polyethers providing at least a portion of the polyol reactants has phosphorus in the molecule.

Thus there can be used polyurethanes from toluene diisocyanate and polyol compounds such as polyesters, e.g., ethylene glycol propylene glycol adipate resin (molecular weight 1900), polyethylene glycol adipate phthalate, polyneopentylene sebacate, the reaction product of 1,4-butanediol with adipic acid and a small amount of trimethylol propane, polyethers, e.g., polypropylene glycol molecular weight 1075, LG–168 (glycerine-propylene oxide adduct molecular weight 1000), 1,2,6-hexanetriol-propylene oxide adduct molecular weight 1500 and LK–380 (hydroxyl No. about 372 and being a mixture of 1,1,3-tris[p-(hydroxypropoxy) phenyl]propane and glycerine-propylene oxide adduct molecular weight about 265). In place of toluene diisocyanate there can be used any of the other polyisocyanates mentioned hereinafter.

In addition to the polyol set forth above there should be at least 5% and preferably 15% to 85% by weight of the total polyol of a phosphorus containing polyol. There can be used 100% of phosphorus containing polyols. Examples of suitable phosphorus containing polyols for use alone or in admixture with other polyols are given below.

As suitable phosphorus containing polyurethanes mention is made of the reaction products of toluene diisocyanate and tris (dipropylene glycol) phosphite, tris (polypropylene glycol molecular weight 2025) phosphite, dipropylene glycol tetrol diphosphite and the other phosphites set forth hereinafter. There can also be used phosphonates such as bis dipropylene glycol hydroxypropoxypropane phosphonate. In place of toluene diisocyanate there can be used any of the other polyisocyanates set forth below.

Frequently, as stated above, there is employed a mixture of 5–85% of phosphorus polyol containing reactant and another polyol for reaction with the polyisocyanate. The phosphorus containing polyol in such event is employed in an amount sufficient to enhance the flame resistance of the polyurethane. While phosphates and thiophosphates can be employed, it is preferred to employ phosphites or phosphonates.

The polyurethanes can be either of the rigid or flexible type and preferably have a density of 2.5 lb./cu. ft. or less although the density can be as high as 6.5 lb./cu. ft.

Another aspect of the present invention is the preparation of novel phosphorus containing polyols and the formation of polyurethanes from such polyols. The novel phosphorus containing polyols can be used in making tobacco filters.

Thus oxyalkylated phenol-aldehyde, phenol-ketone, and phenol-ketone-aldehyde reaction products, e.g., oxyalkylated phenol-aldehyde polymers can be transesterified with a tris hydrocarbon phosphite or tris haloaryl phosphite to form a phosphite containing product. One, two or three phenol or alcohol groups can be removed from the tris substituted phosphite during the transesterification. Preferably, all three groups are removed since the resulting compounds are more stable. The phosphites obtained during this transesterification can be used as stabilizers for vinyl chloride resins, e.g., in an amount of 1%, as stabilizers for polyalkylene glycols, e.g., dipropylene glycol, diethylene glycol, polypropylene glycol 2025, antioxidants for natural rubber and synthetic rubber, e.g., butadiene-styrene copolymer, or as stabilizers for polyethylene and polypropylene.

The phosphite containing oxyalkylated phenolaldehyde resins can be converted to the corresponding phosphates by oxidation, e.g., with hydrogen peroxide, and can be converted to the corresponding thiophosphates by treatment with sulfur. The phosphates and thiophosphates are useful as plasticizers for synthetic resins, e.g., polyurethanes and vinyl chloride resins.

The phosphites are easier to make and are more stable than the phosphates and thiophosphates and hence are preferred.

The phosphites, phosphates and thiophosphates of the present invention are particularly useful for incorporation into urethane systems where they react with the isocyanato groups in the growing polymer chain and thus become fixed. They can be the sole hydroxyl reactant present or they can be used in admixture with other polyhydroxy compounds in forming the polyurethanes. Foamed polyurethanes can be obtained by adding water prior to or simultaneously with the addition of the polyisocyanate. Alternatively, there can be uniformly distributed a liquefied halogen substituted alkane containing at least one fluorine in its molecule in liquid form, having a boiling point at one atmosphere pressure not higher than 80° F. and preferably not lower than −60° F. in either the phosphorus containing polymer reactant or the polyisocyanate reactant and then mixing the reactants and permitting the temperature of the mixture to rise during the ensuing reaction above the boiling point of the liquefied gas to produce a porous polyurethane. Such fluorine containing compounds include dichlorodifluoromethane, dichloromonofluoromethane, chlorodifluoromethane, dichlorotetrafluoroethane. The foams can be formed with such fluorine containing compounds in the manner described in General Tire British Patent 821,342.

Foamed polyurethanes can be made by either the one shot or two step procedure.

The polyurethanes prepared according to the present invention are solids. They have good flameproofing properties and in the foamed form are useful as linings for textiles, e.g., coats, insulation in building construction, upholstery filling material, pillows, tobacco filters, etc. The unfoamed polyurethane products are useful wherever elastomeric polyurethanes can be employed with the advantage of improved flame and fire resistance. The elastomers can be cured in an oven, e.g., at 110° C. The elastomers in thread form can be employed in making girdles, etc.

As examples of polyisocyanates which can be employed to make the polyurethane there can be used toluene-2,4-diisocyanate; toluene 2,6-diisocyanate; 4-methoxy-1,3-phenylene-diisocyanate; 4-chloro-1,3-phenylene-diisocyanate; 4-isopropyl-1,3-phenylene diisocyanate; 4-ethoxy-1,3-phenylene-diisocyanate; 2,4-diisocyanatodiphenylether; 3,3-dimethyl-4,4-diisocyanatodiphenylmethane, mesitylene diisocyanate; durylene diisocyanate; 4,4′-methylene-bis (phenylisocyanate), benzidine diisocyanate, o-nitro-benzidiene diisocyanate; 4,4′-diisocyanatodibenzyl; 1,5-naphthalene diisocyanate; tetramethylene diisocyanate, 3,3′-bitolylene-4,4′-diisocyanate, hexamethylene diisocyanate, decamethylene diisocyanate, tritolylmethane triisocyanate, the reaction product of toluene diisocyanate with trimethylolpropane at an NCO/OH ratio of 2:1 (Mondur CB), the reaction product of toluene diisocyanate with a polyol phosphite at an NCO/OH ratio of 2:1, e.g., when the polyol phosphite is dipropylene glycol tetrol diphosphite or tris (Pentaerythritol-polypropylene glycol ether) phosphite.

Alternatively as the polyisocyanate there can be used prepolymers made by reacting one or more of the above polyisocyanates with a polyhydroxy compound such as a polyester having terminal hydroxyl groups, a polyhydric alcohol, hydroxy containing glycerides, etc. The prepolymers should have terminal isocyanato groups. To insure this it is frequently desirable to employ an excess of 5% or more of the polyisocyanate in forming the prepolymer.

Typical examples of such prepolymers having isocyanate end groups are those formed from toluene diisocyanate and polyhydroxy compounds. In the illustra-

tive examples a mixture of 80% 2,4-isomer and 20% 2,6-isomer of toluene diisocyanate was employed to make the prepolymer. Thus, there can be used the prepolymers from toluene diisocyanate and castor oil, toluene diisocyanate and blown tung oil (or blown linseed oil or blown soybean oil), toluene diisocyanate and the polyester of ethylene glycol, propylene glycol and adipic acid having a molecular weight of 1900 described in Example I of Kohrn Patent 2,953,839, as well as the isocyanate terminated prepolymers in Examples II–VIII, inclusive, of the Kohrn patent, toluene diisocyanate and polytetramethylene glycol (1000 molecular weight, toluene diisocyanate and polypropylene glycol (molecular weight 2025), toluene diisocyanate and dipropylene glycol, toluene diisocyanate and polypropylene glycol (molecular weight 1025), toluene diisocyanate and LG–56 (glycerine propylene oxide adduct having a molecular weight of 3000), toluene diisocyanate and 1,2,6-hexanetriol-propylene oxide adducts having molecular weights of 500, 700, 1500, 2500, 3000 and 4000, hexamethylene diisocyanate and pentaerythritol, toluene diiocyanate and polyethylene sebacate, toluene diisocyanate and a mixture of 98% polypropylene glycol (molecular weight 1900) with 2% 1,2,6'-hexanetriol, toluene diisocyanate and a copolymer of ethylene oxide and propylene oxide having a molecular weight of 2020, toluene diisocyanate and glyceryl adipate phthalate polymer, toluene, diisocyanate and a mixture of polypropylene ether glycol molecular weight 995 and castor oil described in Example 2 of Kane Patent 2,955,091 as well as the other prepolymers set forth in Examples 1 and 3–11 of Kane, toluene diisocyanate and polypropylene ether glycol (molecular weight 1800) of Example I of Swart Patent 2,915,496 and the prepolymers of Examples II, III, VI and VIII of the Swart patent, toluene diisocyanate and tris (dipropylene glycol) phosphite and toluene diisocyanate and tris (polypropylene glycol 2025) phosphite.

Any of the conventional basic catalysts employed in polyurethane foam technology can be used. These include N-methyl morpholine, N-ethyl morpholine, trimethyl amine, triethylamine, tributylamine and other trialkylamines, 3-diethylaminopropionamide, heat activated catalysts such as triethylamine citrate, 3-morpholinopropionamide, 2-diethylaminoacetamide, the esterification product of 1 mole of adipic acid and 2 moles of diethylethanolamine, 3-diethylaminopropionamide, diethylethanolamine, triethylenediamine, N,N,N',N'-tetrakis (2-hydroxypropyl) ethylenediamine (Quadrol), N,N'-dimethylpiperazine, N,N - dimethylhexahydroaniline, tribenzyl amine and sodium phenolate.

There can also be used tin compounds, e.g., dibutyltin dilaurate, dibutyltin diacetate, di-2-ethylhexyltin oxide, dibutyltin monolaurate, octylstannoic acid, dibutyltin diethoxide, dibutyltin dioctoate, tributyltin monolaurate, dimethyltin diacetate, dioctyltin diacetate, dilauryltin diacetate, dibutyltin maleate and other hydrocarbontin acylates, dibutyltin dimethoxide and other hydrocarbontin alkoxides, trimethyltin hydroxide, trimethyltin chloride, triphenyltin hydride, triallyltin chloride, tributyltin fluoride, dibutyltin dibromide, bis (carboethoxymethyl) tin diiodide, tributyltin chloride, trioctyltin acetate, butyltin trichloride, octyltin tris (thiobutoxide), dimethyltin oxide, diphenyltin oxide, stannous octanoate, stannous oleate, as well as the other tin compounds set forth in Hostettler French Patent 1,212,252.

Conventional surfactants can be added in an amount of 1% or less, e.g., 0.2% by weight of the composition. The preferred surfactants are silicones, e.g., polydimethyl siloxane having a viscosity of 3 to 100 centistokes, such as polydimethyl siloxane (50 centistokes grade); triethoxy dimethyl polysiloxane molecular weight 850 copolymerized with a dimethoxypolyethylene glycol having a molecular weight of 750 and any of the other siloxanes disclosed in Hostettler French Patent 1,212,252.

The novel hydroxy containing phosphites, phosphates and thiophosphates can be used as the sole hydroxyl group containing compounds in forming the polyurethanes or they can be replaced in part by other polyhydroxy containing compounds such as polyethylene glycol having molecular weights of 400 to 3000, polypropylene glycol having molecular weights of 400 to 3000, ethylene glycol, diethylene glycol, triethylene glycol, propylene glycol, dipropylene glycol, tripropylene glycol, 1,4-butanediol, thiodiglycol, glycerol, trimethylolethane, trimethylolpropane, glycerine-propylene oxide adduct, 1,2,6-hexanetriol-propylene oxide adducts having molecular weights of 500, 700, 1500, 2500, 3000 or 4000, trimethylolphenol, triethanolamine, pentaerythritol, methyl glucoside, castor oil, glycerine ethylene oxide adducts, diethanolamine, ether triols from glycerine and propylene oxide having molecular weights of 265, 1000 and 3000 (available commercially as LG–633, LG–168 and LG–56, respectively), sorbitol-propylene oxide adduct having a molecular weight of 1000, pentaerythritol-propylene oxide adducts molecular weights 368 and 1000, oxypropylated sucrose, blown linseed oil, blown soyabean oil, Quadrol, mixed ethylene glycol-propylene glycol adipate resin (molecular weight 1900), polyethylene adipate phthalate, polyneopentylene sebacate, tris (dipropylene glycol) phosphite, tris (polypropylene glycol 2025) phosphite, dipropylene glycol tetrol diphosphite, tripropylene glycol hexol tetraphosphite, tris (pentaerythritol-polypropylene glycol ether) phosphite (molecular weight about 3000), 1-2,6-hexanetriolpropylene oxide adduct molecular weight 750 (LHT 240) hexol phosphite, and the product made by reacting an excess of 1,4-butanediol with adipic acid and including a small amount of trimethylolpropane for each 3000 to 12,000 molecular weight units of polyester.

While the polyurethanes produced in general are solids, the phosphites, phosphates and thiophosphates from which they are made are normally liquids.

As the oxyalkylated phenol-aldehyde and/or ketone condensation products, there can be employed the organic reaction products of (A) an alpha-beta alkylene oxide having 2 to 4 carbon atoms from the group consisting of ethylene oxide, propylene oxide, butylene oxide, glycide and methyl glycide with (B) an oxyalkylation susceptible fusible phenol-aldehyde and/or ketone condensation product. The oxyalkylated phenol-aldehyde and/or ketone condensation products, e.g., resins, are characterized by introduction into the molecule at the phenolic hydroxyl groups of a plurality of divalent radicals having the formula $(R_1O)_n$ in which $R_1$ is a member of the class of ethylene, propylene (methylethylene), butylene (ethylethylene), hydroxypropylene and hydroxybutylene radicals and $n$ is a member varying from 1 to 20; with the proviso that an average of at least 2 moles of alkylene oxide is introduced into the phenol-aldehyde (and/or ketone) condensation product. Preferably at least one $R_1O$ radical is introduced for each available phenolic hydroxyl.

The most preferred alkylene oxide is propylene oxide and next to propylene oxide it is preferred to use ethylene oxide.

As starting phenol-aldehyde and/or ketone condensation products there can be used any of the phenol-aldehyde and/or ketone resins disclosed in De Groote Patent 2,499,365. As the oxyalkylated phenol-aldehyde and/or ketone condensation product there can be employed any of the oxyalkylated phenol-aldehyde and/or ketone resins of De Groote. The entire disclosure of the De Groote patent is hereby incorporated by reference. There can also be used as starting products phenol-ketone condensation products and mixed phenol-ketone-aldehyde condensation products, e.g., of the types set forth in De Groote. The condensation products of the present invention have at least 3 phenolic units and at least two aldehyde and/or ketone residues or units. Particularly pertinent portions of De Groote are column 5, lines 48–68, Example 1*a*–188*a*, inclusive, Examples 203*a*–211*a*, inclusive, Examples 258*a*–339*a*, inclusive, column 91, line 72, to column 92,

line 17, column 92, lines 55–72, column 93, line 9 to column 95, line 23, column 97, line 14, to column 99, line 72, Examples 1*b*–19*b*, inclusive, Examples 24*b*–26*b*, inclusive, Example 43*b*, Examples 48*b*–61*b*, inclusive, Example 66*b*, Example 74*b*, column 124, line 53, to column 125, line 17, column 125, line 39, to column 126, line 39 and all of the tables showing oxyalkylation on columns 125–130, inclusive, the tables on columns 131–136, inclusive, except for those portions referring to Examples 200*a*, 201*a*, 202*a*, 195*a*, 196*a*, 197*a*, 213*a*, 239*a*, 257*a*, 351*a* and 344*a* through 376*a*.

Thus, any of the oxyalkylated phenolaldehyde and/or ketone resins of De Groote can be employed as starting materials in the present invention. Preferably, the resin employed has a hydrocarbon or halogen substituent in the ortho or para position to the phenolic hydroxyl, most preferably in the para position. However, as indicated, trifunctional or higher functional phenols can be employed. When using phenol per se or meta cresol, for example, novolaks can be used. Alternatively, resoles can be employed providing the phenol-formaldehyde resin, for example, has not reached the infusible stage.

As examples of phenols which can be used mention is made of phenol, m-cresol, o-cresol, p-cresol, o-chlorophenol, p-chlorophenol, m-chlorophenol, p-bromophenol, p-fluorophenol, p-ethylphenol, p-butylphenol, p-tertiary butylphenol, p-phenylphenol, o-tertiary butylphenol, p-secondary butylphenol, p-tertiary amylphenol, p-secondary amylphenol, p-cyclohexylphenol, resorcinol, 3,4-xylenol, bisphenol A, o-tertiary amylphenol, p-tertiary hexylphenol, p-octylphenol, p-styrylphenol, cresylic acid, p-nonylphenol, p-dodecylphenol, o-dodecylphenol, p-nonylphenol, p-menthylphenol, p-decylphenol, p-cumylphenol, p-octadecylphenol, p-eicosanylphenol, p-tetraicosanylphenol, p-isopropylphenol, o-isopropylphenol, thymol, carvacrol, alpha-naphthol, beta-naphthol, hydroquinone and cardanol. As the aldehyde or ketone there can be used formaldehyde, furfural, acetaldehyde, propionaldehyde, butyraldehyde, benzaldehyde, heptaldehyde, acrolein, glyoxal, 2-ethyl-3 propyl acrolein, acetone, methyl ethyl ketone, cyclohexanone and chloroacetone.

Preferably, the phenol has an alkyl substituent of 1 to 24 carbon atoms in the para position or in the ortho position. The preferred aldehyde is formaldehyde. Preferably, the resins have 3 to 7 phenolic nuclei with an average of 4.5 to 5.5 nuclei. However, the resins can have 15 or even more structural units (as shown on column 99 of the De Groote patent).

While De Groote indicates that its oxyalkylated products should be hydrophyllic this is not an essential feature of the present invention since products which are still hydrophobic can be employed.

As previously stated there should be used at least two moles of alkylene oxide per mole of phenol-aldehyde (and/or ketone) condensation product and preferably at least one $R_1O$ radical is introduced per each available phenolic hydroxyl. Most preferably at least two moles of alkylene oxide (or hydroxyalkylene oxide) are used per structural unit of the phenol-aldehyde or phenol-ketone resin. There can be used more of the alkylene oxide, e.g., 6 to 1; 10 to 1; 15 to 1 or 20 to 1 moles per structural unit of the resin. For use in forming flexible foamed polyurethanes desirably at least 6 moles of alkylene oxide, preferably propylene oxide are used per structural unit. For making rigid foamed polyurethanes it is frequently desirable to reduce the alkylene oxide to 1 to 2 moles per structural unit in order to get a maximum of flame resistance.

For the transesterification of the oxyalkylated phenol-aldehyde and/or ketone resin there can be used trihydrocarbon or trihaloaryl phosphites including trialkyl and triaryl phosphites such as triphenyl phosphite, tri-o-cresyl phosphite, tri-m-cresyl phosphite, tri-p-cresyl phosphite, tri-xylenyl phosphite, tridecyl phosphite, diphenyl decyl phosphite and triethyl phosphite as well as tri-haloaryl phosphites such as tri-p-chlorophenyl phosphite, tri-o-chlorophenyl phosphite, etc.

Preferably, the reaction between the oxyalkylated phenol-aldehyde resin and the tri-hydrocarbon phosphite is catalyzed by a dihydrocarbon (e.g., aryl or alkyl) or dihaloaryl phosphite, e.g., 0.1–1% of diphenyl phosphite, di-o-cresyl phosphite, di-p-cresyl phosphite, dimethyl phosphite, diethyl phosphite, didecyl phospite, dioctadecyl posphite, di-p-chlorophenyl phosphite, etc. Such catalysts are neutral and are particularly advantageous with thermosetting resins since alkaline catalysts tend to advance the resin.

Alkaline catalysts can be employed for the transesterification. Such catalysts preferably have a pH of at least 11 in a 0.1 N solution. Examples of these catalysts are sodium phenolate, sodium cresylate, sodium methylate, potassium phenolate and sodium decylate. They are employed in an amount of 0.1–1% of the reactants.

By utilizing an excess of the oxyalkylated phenol-aldehyde or ketone resin, e.g., a five fold excess, calculated on the molar ratio of the resin structural unit molecular weight to the triaryl phosphite molecular weight there can be obtained products wherein 3 different resin molecules are attached to a single phosphorus atom. As the amount of resin is reduced, the tendency for different hydroxyl groups on the same resin molecules reacting with a single phosphorus atom is increased. When an excess of starting oxyalkylated resin is employed to form the phosphite it can be left in the phosphite product and utilized as a polyol in forming the polyurethane.

To determine the amount of isocyanate to employ, a sample of the hydroxyalkylated resin phosphite (with or without hydroxyalkylated resin) is tested to determine its hydroxyl number and then the polyisocyanate is added in conventional manner.

Unless otherwise indicated, all parts and percentages are by weight.

In preparing urethane foams according to the invention a rigid foam is made by utilizing a hydroxyl compound or mixture of hydroxyl compounds having a hydroxyl number of 350–750; a semi-rigid foam is prepared if the hydroxyl number is 75–350 and a flexible foam is prepared if the hydroxyl number is 35–75.

In general, the higher the alkyl group the lower the hydroxyl number. Also, the lower the molecular weight of the alkylene oxide the higher the hydroxyl number (providing there is not an extra hydroxyl group on the alkylene oxide). In preparing urethane foams (and other urethane polymers) the following values are of interest.

| Resin | No. of Units in Resin | Hydroxyl Number | | | | | | | |
|---|---|---|---|---|---|---|---|---|---|
| | | 15E | 3E | 3P | 15P | 6P | 10E | 10P | 20P |
| Phenolformaldehyde | 5 | ---- | 190 | 160 | 46 | ----- | 82 | 65 | 35 |
| Do | 7 | ---- | ----- | 170 | ---- | 106 | ---- | ---- | ---- |
| Cresol-formaldehyde | 5 | ---- | 178 | 153 | ---- | ----- | ---- | 64 | ---- |
| Do | 7 | ---- | ----- | 163 | ---- | 103 | ---- | ---- | ---- |
| Butylphenol-formaldehyde | 5 | 55 | 150 | 134 | 43 | 88 | 74 | 60 | 34 |
| Do | 7 | ---- | ---- | 143 | ---- | 94 | ---- | 65 | ---- |
| Amylphenol-formaldehyde | 5 | ---- | ----- | 122 | ---- | ----- | ---- | ---- | ---- |
| Do | 7 | ---- | ----- | ----- | ---- | 91 | ---- | ---- | ---- |
| Octylphenol-formaldehyde | 5 | ---- | ----- | 115 | ---- | ----- | 68 | 56 | ---- |
| Do | 7 | ---- | ----- | ----- | ---- | 85 | ---- | ---- | ---- |
| Chlorophenol-formaldehyde | 5 | ---- | ----- | 150 | ---- | ----- | ---- | 63 | ---- |

In the above table the term 3E signifies three ethylene oxide groups per resin unit, 3P signifies three propylene oxide groups per resin unit, 6P signifies six propylene oxide groups per resin unit, 10E signifies ten ethylene oxide groups per resin unit, 10P signifies ten propylene oxide groups per resin unit, 15P signifies fifteen propylene oxide

groups per resin unit, 15E signifies fifteen ethylene oxide groups per resin unit, and 20P signifies twenty propylene oxide groups per resin unit.

Unless otherwise indicated, in the following examples the oxyalkylated phenol-formaldehyde and/or ketone resins had about 5 phenol units in the molecule.

*Example 1*

One mole of the oxyethylated p-tertiary butylphenol-formaldehyde resin of Example 1*b* of the De Groote patent (having about 5 phenol units in the resin molecule and 11 moles of ethylene oxide per phenol unit) was mixed with one mole of triphenyl phosphite (310 grams) and 3 grams of diphenyl phosphite. The mixture was heated in vacuo (10 mm.) at 120° C. and phenol was collected until approximately 3 moles had distilled over. The tris oxyethylated p-tertiary butylphenol-formaldehyde resin phosphite formed was a viscous liquid and can be represented by the formula

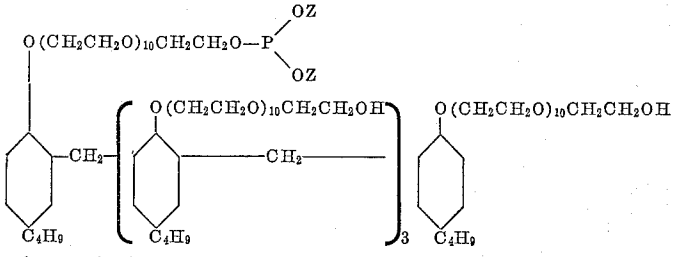

where Z is the grouping

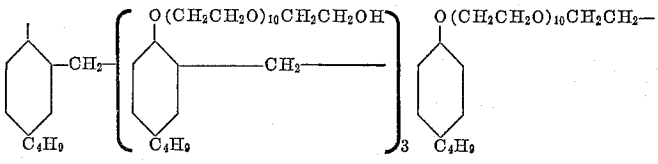

This formula is representative only and the ester linkages for the phosphorus, for example, might be present on other units of the resin molecule instead.

*Example 2*

One mole of the oxypropylated p-tertiary butylphenol-formaldehyde resin of Example 2*b* of De Groote (containing about 8.6 moles of ethylene oxide per phenol unit in the resin molecule) was mixed with one mole of triphenyl phosphite and 2 grams of diphenyl phosphite. The mixture was heated in vacuo (10 mm.) at 120° C. and the phenol formed was distilled and collected until about 3 moles had distilled over. The tris oxypropylated p-tertiary butylphenol-formaldehyde resin phosphite formed was a viscous liquid.

*Example 3*

The process of Example 2 was repeated but distillation was stopped when one mole of phenol had come over. The product was monooxypropylated p-tertiary butylphenol-formaldehyde resin phosphite.

*Example 4*

The process of Example 1 was repeated using an oxyethylated phenol-formaldehyde novolak having 3 ethylene oxide groups per phenol unit in the resin molecule. There was recovered the tris oxyethylated phenol-formaldehyde resin phosphite.

*Example 5*

The process of Example 4 was repeated but there was used an oxypropylated phenol-formaldehyde novolak having 3 propylene oxide groups per phenol unit in the resin molecule. There was recovered the tris oxypropylated phenol-formaldehyde resin phosphite after removal of three moles of phenol by distillation.



*Example 6*

The process of Example 5 was repeated but the oxypropylated phenol-formaldehyde novolak employed had 15 propylene oxide groups per phenol unit in the resin molecule. There was recovered the tris oxypropylated phenol-formaldehyde novolak phosphite as a viscous liquid after recovery of three moles of phenol.

*Example 7*

The process of Example 4 was repeated utilizing an oxyethylated phenol-formaldehyde novolak having 10 ethylene oxide groups per phenol unit in the resin molecule.

*Example 8*

The process of Example 5 was repeated but the oxypropylated phenol-formaldehyde novolak employed had 10 propylene oxide groups per phenol unit in the resin molecule.

*Example 9*

The process of Example 5 was repeated but the oxypropylated phenol-formaldehyde novolak employed had 20 propylene oxide groups per phenol unit in the resin molecule.

*Example 10*

One mole of oxypropylated thermosetting phenol-formaldehyde resin having 15 propylene oxide groups per phenol unit was mixed with one mole of triphenyl phosphite and 2 grams of didecyl phosphite. The mixture was heated in the vacuo (10 mm.) and three moles of phenol removed by distillation to recover the tris oxypropylated phenol-formaldehyde resin phosphite.

*Example 11*

One mole of oxypropylated phenol-formaldehyde novolak having 7 phenol units in the resin molecule and having 6 propylene oxide groups per phenol unit was mixed with one mole of trioctyl phosphite and 2 grams of dioctyl phosphite. The mixture was heated in vacuo (10 mm.) until three moles of octyl alcohol were removed by distillation to recover the tris oxypropylated phenol-formaldehyde novolak phosphite.

*Example 12*

One mole of oxypropylated p-cresol-formaldehyde resin having 5 cresol units in the resin molecule and having 3 ethylene oxide groups per cresol unit was mixed with one mole (310 grams) of triphenyl phosphite and 3 grams of diphenyl phosphite. The mixture was heated in vacuo (10 mm.) until three moles of phenol were removed by distillation to recover the tris oxyethylated cresol-formaldehyde resin phosphite.

*Example 13*

The process of Example 12 was repeated replacing the

oxyethylated p-cresol-formaldehyde resin by an oxypropylated o-cresol-formaldehyde resin having 3 propylene oxide units per cresol unit. The product recovered was tris oxypropylated o-cresol-formaldehyde resin phosphite.

*Example 14*

The process of Example 13 was repeated using oxypropylated p-cresol-formaldehyde resin having 5 cresol units in the resin molecule and having 10 propylene oxide units per cresol unit. The tris oxypropylated o-cresol-formaldehyde resin phosphite was recovered as a substantially colorless viscous liquid.

*Example 15*

One mole of oxypropylated p-cresol-formaldehyde resin having 7 cresol units in the resin molecule and having 6 propylene oxide groups per cresol unit was mixed with one mole of triphenyl phosphite and 3 grams of diphenyl phosphite. The mixture was heated in vacuo (10 mm.) until about three moles of phenol were removed by distillation to recover the tris oxypropylated p-cresol-formaldehyde resin phosphite.

*Example 16*

One mole of oxypropylated p-tertiary butylphenol-formaldehyde resin having 5 butylphenol units in the resin molecule and having 2 propylene oxide groups per butylphenol unit was mixed with one mole of triphenyl phosphite and 3 grams of diphenyl phosphite. The mixture was heated in vacuo (10 mm.) until about three moles of phenol were removed by distillation to recover the tris oxypropylated p-tertiary butylphenol-formaldehyde resin phosphite.

*Example 17*

One mole of oxyethylated o-n-butylphenol-formaldehyde resin having 5 butylphenol units in the resin molecule and having 3 ethylene oxide groups per butylphenol unit was mixed with one mole of triphenyl phosphite and 3 grams of dicresyl phosphite. The mixture was heated in vacuo (10 mm.) until three moles of phenol were removed by distillation to recover the tris oxyethylated o-n-butylphenol-formaldehyde resin phosphite.

*Example 18*

The process of Example 17 was repeated using oxyethylated p-secondary butylphenol-formaldehyde resin having 15 ethylene oxide groups per butylphenol unit. There was recovered tris oxyethylated p-secondary butylphenol-formaldehyde resin phosphite as a viscous liquid.

*Example 19*

One mole of oxypropylated p-tertiary butylphenol-formaldehyde resin having 5 butylphenol units in the resin molecule and having 3 propylene oxide groups per butylphenol unit was mixed with one mole of triphenyl phosphite and 3 grams of diphenyl phosphite. The mixture was heated in vacuo (10 mm.) until about three moles of phenol were removed by distillation to recover the tris oxypropylated p-tertiary butylphenol-formaldehyde resin phosphite.

*Example 20*

One mole of oxypropylated p-tertiary butylphenol-formaldehyde resin having 5 butylphenol units in the resin molecule and having 15 propylene oxide groups per butylphenol unit was mixed with one mole of triphenyl phosphite (310 grams) and 2.5 grams of diphenyl phosphite. The mixture was heated in vacuo (10 mm.) until about three moles of phenol were removed by distillation to recover the tris oxypropylated p-tertiary butylphenol-formaldehyde resin phosphite as a viscous liquid.

*Example 21*

The process of Example 20 was repeated but the oxypropylated p-tertiary butylphenol-formaldehyde resin employed had 6 propylene oxide groups per butylphenol unit.

*Example 22*

One mole of oxypropylated p-tertiary butylphenol-formaldehyde resin having 5 butylphenol units in the resin molecule and having 10 propylene oxide groups per butylphenol unit was mixed with one mole of triphenyl phosphite and 3 grams of diphenyl phosphite. The mixture was heated in vacuo (10 mm.) until about three moles (282 grams) of phenol were removed by distillation to recover the tris oxypropylated p-tertiary butylphenol-formaldehyde resin phosphite as a colorless viscous liquid.

*Example 23*

The process of Example 22 was repeated replacing the oxypropylated resin by one mole of oxyethylated p-tertiary butylphenol-formaldehyde resin having 10 ethylene oxide groups per butylphenol unit. The product recovered was tris oxyethylated p-tertiary butylphenol-formaldehyde resin phosphite as a liquid.

*Example 24*

The process of Example 22 was repeated replacing the oxypropylated resin by one mole of oxypropylated p-tertiary butylphenol-formaldehyde resin having 20 propylene oxide groups per butylphenol unit. The product recovered was tris oxypropylated p-tertiary butylphenol-formaldehyde resin phosphite as a colorless liquid.

*Example 25*

The process of Example 22 was repeated replacing the oxypropylated resin by one mole of oxypropylated p-n-butylphenol-butyraldehyde resin having 10 propylene oxide groups per butylphenol unit. The product recovered was tris oxypropylated p-n-butylphenol-butyraldehyde resin phosphite as a colorless liquid.

*Example 26*

The process of Example 22 was repeated replacing the oxypropylated resin by one mole of oxypropylated p-tertiary butylphenol-furfural resin having 10 propylene oxide groups per butylphenol unit. The product recovered was tris oxypropylated p-tertiary butylphenol-furfural resin phosphite.

*Example 27*

The process of Example 22 was repeated replacing the oxypropylated resin by one mole of oxypropylated p-tertiary butylphenol-formaldehyde resin having 7 butylphenol units in the resin molecule and having 6 propylene oxide groups per butylphenol unit. The product recovered was tris oxypropylated p-tertiary butylphenol-formaldehyde resin phosphite.

*Example 27a*

The proces of Example 22 was repeated replacing the oxypropylated resin by one mol of oxypropylated p-tertiary butylphenol-formaldehyde resin having 7 butylphenol units in the resin molecule and having 10 propylene oxide groups per butylphenol unit. The product recovered was tris oxypropylated p-tertiary butylphenol-formaldehyde resin phosphite as a liquid.

*Example 28*

The process of Example 22 was repeated replacing the oxypropylated resin by one mole of oxypropylated p-tertiary amylphenol-formaldehyde resin having 5 amylphenol units in the resin molecule and having 3 propylene oxide groups per amylphenol unit. The product recovered was tris oxypropylated p-tertiary amylphenol-formaldehyde resin phosphite.

*Example 29*

The process of Example 28 was repeated but the oxypropylated amylphenol-formaldehyde resin had 10 pro-

pylene oxide groups per amylphenol unit. The phosphite product recovered was a viscous liquid.

*Example 30*

The process of Example 22 was repeated replacing the oxypropylated resin by one mole of oxypropylated p-tertiary amylphenol-formaldehyde resin having 7 amylphenol units in the resin molecule and having 6 propylene oxide groups per amylphenol unit. The product recovered was tris oxypropylated p-tertiary amylphenol-formaldehyde resin phosphite.

*Example 31*

The process of Example 22 was repeated replacing the oxypropylated resin by one mole of oxypropylated octylphenol-formaldehyde resin having 5 octylphenol units in the resin molecule and having 2 propylene oxide groups per octylphenol unit. The product recovered was tris oxypropylated p-octylphenol-formaldehyde resin phosphite.

*Example 32*

The process of Example 31 was repeated by the oxypropylated p-octylphenol-formaldehyde resin used had 10 propylene oxide groups per octylphenol unit. The tris oxypropylated p-octylphenol-formaldehyde resin phosphite recovered was a viscous liquid.

*Example 33*

The process of Example 31 was repeated but the oxypropylated p-octylphenol-formaldehyde resin used had 3 propylene oxide groups per octylphenol unit.

*Example 33a*

The process of Example 31 was repeated but the starting resin was replaced by oxyethylated p-octylphenol-formaldehyde resin having 10 ethylene oxide groups per octylphenol unit. The tris oxyethylated p-octylphenol-formaldehyde resin phosphite was a viscous liquid.

*Example 34*

The process of Example 31 was repeated but the oxypropylated resin employed was oxypropylated p-octylphenol-formaldehyde resin having 7 octylphenol units and having 6 propylene oxide groups per octylphenol unit.

*Example 35*

The process of Example 22 was repeated but the starting resin was oxypropylated p-dodecylphenol-formaldehyde resin having 10 propylene oxide groups per dodecylphenol unit. There was recovered tris oxypropylated dodecylphenol-formaldehyde resin phosphite as a liquid.

*Example 36*

The process of Example 22 was repeated but the starting resin was oxypropylated p-chlorophenol-formaldehyde resin having 10 propylene oxide groups per chlorophenol unit. There was recovered tris oxypropylated p-chlorophenol-formaldehyde resin phosphite as a liquid.

*Example 37*

The process of Example 36 was repeated but the starting oxypropylated resin had 3 propylene oxide groups per chlorophenol unit.

*Example 38*

The process of Example 22 was repeated replacing the starting resin with p-nonylphenol-formaldehyde resin having 5 nonylphenol units in the resin molecule and having 2 ethylene oxide units per nonylphenol unit. There was recovered tris oxyethylated p-nonylphenol-formaldehyde resin phosphite.

As previously indicated, the corresponding phosphates can be prepared by oxidizing the corresponding phosphites, e.g., with hydrogen peroxide (either 30% or 50% concentration) or other peroxy compounds, e.g., peracetic acid. The peroxy compound is used in an amount which is stoichiometrically equivalent to the amount of phosphorus present.

*Example 39*

To the tris oxypropylated p-tertiary butylphenol-formaldehyde resin phosphite of Example 22 there was added an equimolecular amount of 50% aqueous hydrogen peroxide. After reaction was complete, the water was distilled off leaving a residue of tris oxypropylated p-tertiary butylphenol-formaldehyde resin phosphate as a liquid.

In place of the phosphite resin of Example 22 in a similar manner there can be converted into phosphates any of the other phosphite resins of Examples 1–21 and 23–38.

*Example 40*

To the tris oxypropylated p-tertiary butylphenol-formaldehyde resin phosphite of Example 22 there was added an equimolecular amount of elemental sulfur. The mixture was heated to 110–130° C. for one hour. The product was tris oxypropylated p-tertiary butylphenol-formaldehyde resin thiophosphate as a liquid.

In place of the phosphite resin of Example 22 in a similar manner there can be converted into thiophosphates any of the other phosphite resins of Examples 1–21 and 23–38.

In the following Examples 41–69 a one shot foam was prepared by utilizing the following standard formulation in a 10 ounce cup.

| | Grams |
|---|---|
| Water | 0.37 |
| Dibutyltin dilaurate | 0.07 |
| Polydimethyl siloxane | 0.12 |
| N-ethyl morpholine | 0.1 |
| Polyol | As indicated |

This mixture is designated in the following examples as Formulation A.

Foams were made by adding Formulation A to 5.2 grams of toluene diisocyanate (a mixture of 80% of the 2,4-isomer and 20% of the 2,6-isomer). The foams prepared were placed in a 110° C. curing oven for 20 minutes.

The 80:20 mixture of toluene diisocyanates was used in all of the following examples.

*Example 41*

The polyol used in Formulation A was 15.4 grams of the tris oxypropylated p-tertiary butylphenol-formaldehyde resin phosphite prepared in Example 22. Upon addition of the 5.2 grams of toluene diisocyanate there was formed a solid polyurethane foam.

*Example 42*

The polyol used in Formulation A was the same as that in Example 41. The water was omitted from Formulation A and 5.2 grams of the toluene diisocyanate (80:20 ratio of 2,4 and 2,6-isomers) were added. After prepolymer formation was complete, there was added 0.37 gram of water with strong stirring to obtain a solid foamed product.

*Example 43*

The polyol used in Formulation A was a mixture of 7.7 grams of the polyol used in Example 41 together with 7.2 grams of LG–56. After addition of the 5.2 grams of toluene diisocyanate, there was obtained a nice solid foam.

*Example 44*

The polyol used in Formulation A was a mixture of 2.1 grams of the tris oxyethylated phenol-formaldehyde resin phosphite of Example 4 and 7 grams of polypropylene glycol 2025. Upon addition of 5.2 grams of toluene diisocyanate a solid foamed polymer was produced.

*Example 45*

The polyol used in Formulation A was a mixture of 2.5 grams of the tris oxypropylated phenol-formaldehyde resin phosphite of Example 5 and 7.2 grams of LG–56. Upon addition of 5.2 grams of toluene diisocyanate a solid foamed polymer was produced.

*Example 46*

The polyol used in Formulation A was 17.2 grams of the tris oxypropylated phenolformaldehyde resin phosphite of Example 6. Upon addition of 5.2 grams of toluene diisocyanate a solid foamed polymer was produced.

A similar foam was prepared using the phosphite of Example 10.

*Example 47*

The polyol used in Formulation A was a mixture of 7.3 grams of the tris oxypropylated phenol-formaldehyde resin phosphite of Example 11 and 7.2 grams of LG–56. Upon addition of 5.2 grams of toluene diisocyanate a solid foamed polymer was produced.

*Example 48*

The polyol used in Formulation A was a mixture of 2.7 grams of the tris oxypropylated cresol-formaldehyde resin phosphite of Example 13 and 7.2 grams of LG–56. Upon addition of 5.2 grams of toluene diisocyanate a foamed polymer was produced.

*Example 49*

The polyol used in Formulation A was a mixture of 7 grams of the tris oxypropylated cresol-formaldehyde resin phosphite of Example 14 and 7 grams of polypropylene glycol 2025. Upon addition of 5.2 grams of toluene diisocyanate a solid foamed polymer was produced.

*Example 50*

The polyol used in Formulation A was a mixture of 2.5 grams of the tris oxyethylated butylphenol-formaldehyde resin phosphite of Example 16 and 7.2 grams of LG–56. Upon addition of 5.2 grams of toluene diisocyanate a solid foamed polymer was produced.

*Example 51*

The polyol employed in Formulation A was 14.4 grams of the tris oxyethylated butylphenol-formaldehyde resin phosphite of Example 18. Upon addition of 5.2 grams of toluene diisocyanate a solid foamed polymer was produced.

*Example 52*

The polyol employed in Formulation A was a mixture of 2.7 grams of the tris oxyethylated butylphenol-formaldehyde resin phosphite of Example 17 and 7.2 grams of LG–56. Upon addition of 5.2 grams of toluene diisocyanate a solid foamed polymer was produced.

*Example 53*

The polyol employed in Formulation A was a mixture of 9.3 grams of the tris oxypropylated butylphenol-formaldehyde resin phosphite of Example 20 and 7.2 grams of LG–56. Upon addition of 5.2 grams of toluene diisocyanate a solid foamed polymer was produced.

*Example 54*

The polyol employed in Formulation A was a mixture of 4.5 grams of the tris oxypropylated butylphenol-formaldehyde resin phosphite of Example 21 and 7.2 grams of polypropylene glycol 2025. A solid foam was formed upon the addition of 5.2 grams of toluene diisocyanate.

*Example 55*

The polyol employed in Formulation A was a mixture of 5.5 grams of the tris oxyethylated butylphenol-formaldehyde resin phosphite of Example 23 and 7.2 grams of LG–56. A solid foam was formed upon the addition of 5.2 grams of toluene diisocyanate.

*Example 56*

The polyol employed in Formulation A was a mixture of 12 grams of the tris oxypropylated butylphenol-formaldehyde resin phosphite of Example 24 and 7.2 grams of LG–56. The foam was produced upon the addition of 5.2 grams of toluene diisocyanate.

*Example 57*

The polyol employed in Formulation A was a mixture of 5.7 grams of the tris oxyethylated butylphenol-formaldehyde resin phosphite of Example 1 and 7.2 grams of polypropylene glycol 2025. The foam was produced upon the addition of 5.2 grams of toluene diisocyanate.

*Example 58*

The polyol employed in Formulation A was a mixture of 5.7 grams of the tris oxypropylated butylphenol-formaldehyde resin phosphite of Example 2 and 7.2 grams of LG–56. The solid foam was produced upon the addition of 5.2 grams of toluene diisocyanate.

*Example 59*

The polyol employed in Formulation A was a mixture of 3.8 grams of the tris oxypropylated butylphenol-formaldehyde resin phosphite of Example 27 and 7.2 grams of LG–56. A solid foam was produced upon the addition of 5.2 grams of toluene diisocyanate.

*Example 60*

The polyol employed in Formulation A was a mixture of 6 grams of the tris oxypropylated butylphenol-formaldehyde resin phosphite of Example 27 and 7.2 grams of LG–56. A solid foam was produced upon the addition of 5.2 grams of toluene diisocyanate.

*Example 61*

The polyol employed in Formulation A was 13.8 grams of the tris oxypropylated butylphenol-butyraldehyde resin phosphite of Example 25. A solid foam was formed upon the addition of 5.2 grams of toluene diisocyanate.

*Example 62*

The polyol employed in Formulation A was 14.4 grams of the tris oxypropylated butylphenol-furfural resin phosphite of Example 26. A solid foam was formed upon the addition of 5.2 grams of toluene diisocyanate.

*Example 63*

The polyol employed in Formulation A was 14.4 grams of the tris oxypropylated amylphenol-formaldehyde resin phosphite of Example 29. A solid foam was formed upon the addition of 5.2 grams of toluene diisocyanate.

*Example 64*

The polyol employed in Formulation A was a mixture of 3 grams of the tris oxypropylated octylphenol-formaldehyde resin phosphite of Example 31 and 7.2 grams of polypropylene glycol 2025. A solid foam was formed upon the addition of 5.2 grams of toluene diisocyanate.

*Example 65*

The polyol employed was a mixture of 6 grams of the tris oxyethylated octylphenol-formaldehyde resin phosphite of Example 33*a* and 7.2 grams of LG–56. A solid foam was formed upon the addition of 5.2 grams of toluene diisocyanate.

*Example 66*

The polyol employed was 14.4 grams of the tris oxypropylated octylphenol-formaldehyde resin phosphite of Example 32. A solid foam was formed upon the addition of 5.2 grams of toluene diisocyanate.

*Example 66a*

The polyol employed was a mixture of 6.5 grams of the tris oxypropylated chlorophenol-formaldehyde resin phosphite of Example 36 and 7.2 grams of LG–56. Upon the addition of 5.2 grams of toluene diisocyanate a solid foam was produced.

*Example 67*

The polyol employed was 14.4 grams of the tris oxypropylated dodecylphenol-formaldehyde resin phosphite of Example 35. Upon the addition of 5.2 grams of toluene diisocyanate a solid foam was produced.

*Example 68*

The polyol employed was a mixture of 2.9 grams of the tris oxypropylated nonylphenol-formaldehyde resin phosphite of Example 38 and 7.2 grams of LG–56. Upon the addition of 5.2 grams of toluene diisocyanate a solid foam was produced.

*Example 69*

The polyol employed was 14.4 grams of the tris oxypropylated butylphenol-formaldehyde resin phosphate of Example 39. Upon the addition of 5.2 grams of toluene diisocyanate a solid foam was produced.

*Example 70*

The polyol employed was 14.4 grams of the tris oxypropylated butylphenol-formaldehyde resin thiophosphate of Example 40. Upon the addition of 5.2 grams of toluene diisocyanate a solid foam was produced.

*Example 71*

237 grams of (0.021 mole) of the tris oxypropylated butylphenol-formaldehyde resin phosphite of Example 22 and 95 grams (0.55 mole) of toluene diisocyanate were heated together at 90° C. for one hour and dissolved in 400 ml. of dimethyl formamide solvent and portions were painted on (*a*) glass dish, (*b*) a steel plate and (*c*) a piece of wood. The samples were placed in an oven at 120° C. for one hour to remove the solvent and then air cured for 4 hours. In all cases a clear resin coating was obtained. The coating acted as a fire retardant. The polyurethane formed was useful therefore as a nonburning paint.

*Example 72*

The process of Example 1 was repeated using an oxypropylated phenol-formaldehyde novolak having 3 phenolic units and 2 methylene groups. There were 3 propylene oxide groups per phenol unit. There were employed 5 moles of the novolak per mole of triphenyl phosphite and 0.02 mole of diphenyl phosphite. The distillation was continued until about 3 moles of phenol had distilled over.

*Example 73*

The process of Example 1 was repeated utilizing the resin of De Groote Example 327*a* which had been etherified with 250 grams of propylene oxide per 167 grams of resin. One mole of the oxypropylated resin was used with one mole of triphenyl phosphite and 3 grams of diphenyl phosphite.

*Example 74*

The process of Example 1 was repeated utilizing the resin of Example 317*a* of De Groote which had been further reacted with 3 moles of propylene oxide per phenolic hydroxyl group.

*Example 75*

The polyol used in Formulation A was a mixture of 7.2 grams of LG–56 and 2.5 grams a tris oxypropylated phenol-formaldehyde novolak phosphite having 5 phenolic groups and having 1 propylene oxide unit for each phenolic group and having a hydroxyl number of about 190. The oxypropylated novolak phosphite included some free oxypropylated novolak as a result of incomplete esterification. Upon addition of 5.2 grams of toluene diisocyanate a solid foamed polymer was produced.

The phosphites prepared in Example 72, 73 and 74 can be similarly converted into foamed polyurethanes by replacing the tris oxypropylated phenolformaldehyde resin in Example 45 by the equivalent weight of the phosphites prepared in Examples 72, 73 and 74. Thus, there can be used about 2.4 grams of the resin phosphite of Example 74 with 7.2 grams of LG–56 in Formulation A with addition of 5.2 grams of toluene diisocyanate to form a solid foamed polymer.

I claim:

1. A member of the group consisting of phosphite, phosphate and thiophosphate esters of oxyalkylated phenol-aldehyde and phenol-ketone resins, said resins being characterized by etherification of the resin molecule at the phenolic oxygens thereof by at least two divalent oxyalkylene radicals having the formula $(R_1O)_n$ in which $R_1$ is a member of the group consisting of ethylene radicals, propylene radicals, butylene radicals, hydroxypropylene radicals and hydroxybutylene radicals, *n* is an integer of at least one, the phosphorus is attached to a terminal oxygen of at least one of said divalent radicals and at least a portion of the remainder of said divalent radicals terminating in hydrogen.

2. A polyoxyalkylated phenol-aldehyde resin phosphite, said resin being characterized by etherification of the molecule at the phenolic oxygens by a plurality of divalent unsubstituted polyoxyalkylene radicals having the formula $(R_2O)_n$ in which $R_2$ is a saturated aliphatic hydrocarbon radical having 2 to 3 carbon atoms, *n* is an integer of at least 2, the phosphorus having its valences satisfied by a terminal oxygen of said divalent radicals, the remainder of said divalent radicals terminating in hydrogen atoms, there being at least two free hydroxy groups present in said phosphite.

3. A polyoxyalkylated phenol aldehyde resin phosphite, said resin being characterized by etherification of the molecule at the phenolic oxygens by a plurality of divalent radicals of the formula $(R_3O)_n$ in which $R_3$ is propylene and *n* is an integer, the phosphorus having its valences satisfied by a terminal oxygen of said divalent radicals, the remainder of said divalent radicals terminating in hydrogen atoms, there being at least two free hydroxyl groups present in said phosphite.

4. A polyoxyalkylated phenol-ketone resin phosphite, said resin being characterized by etherification of the molecule at the phenolic oxygen by a plurality of divalent radicals having the formula $(R_2O)_n$ when $R_2$ is a divalent aliphatic hydrocarbon radical having 2 to 3 carbon atoms, *n* is an integer of at least one, the phosphorus having its valences satisfied by terminal oxygens of said divalent radicals, the remainder of said divalent radicals terminating in hydrogen atoms, there being at least two free hydroxyl groups present in said phosphite.

5. A tris polyoxyalkylated phenol-aldehyde resin phosphite, said resin being characterized by etherification of the resin molecule at the phenolic oxygen by a plurality of divalent unsubstituted polyoxyalkylene radicals having the formula $(R_2O)_n$ wherein $R_2$ is an alkylene radical having 2 to 3 carbon atoms and *n* is an integer of at least one, the phosphorus atom having each of its valences satisfied by a terminal oxygen of one of said divalent radicals, the remainder of said divalent radicals terminating in hydrogen atoms, there being at least three free hyldroxyl groups present in said phosphite.

6. A tris polyoxyalkylated phenol-formaldehyde resin phosphite, said resin being characterized by etherification of the resin molecule at the phenolic oxygen by a plurality of divalent unsubstituted polyoxyalkylene radicals having the formula $(R_2O)_n$ wherein $R_2$ is an alkylene radical having 2 to 3 carbon atoms and *n* is an integer of at least one, the phosphorus atom having each of its valences satisfied by a terminal oxygen of one of said divalent radicals, the remainder of said divalent radicals terminating in hydro-

gen atoms, there being at least three free hydroxyl groups present in the phosphite.

7. A phosphite according to claim 6 wherein the phenol of the phenol-formaldehyde resin is an alkylated phenol in which the alkyl group has 1 to 24 carbon atoms.

8. A phosphite according to claim 7 wherein the alkyl group is in one of the ortho and para positions.

9. A phosphite according to claim 6 wherein there are between 1 and 20 oxyalkylene groups per phenol unit.

10. A phosphite according to claim 6 wherein there are between 2 and 20 oxyalkylene groups per phenol unit and the phosphite has a hydroxyl number between 35 and 200.

11. A phosphite according to claim 10 wherein the oxyalkylene groups are oxypropylene groups.

12. A phosphite according to claim 6 wherein the phenol of the phenol-formaldehyde resin is phenol per se.

13. An oxyalkylated phenol-formaldehyde resin phosphite, said resin being characterized by etherification of the resin molecule at the phenolic oxygens thereof by at least two divalent oxyalkylene radicals having the formula $(R_1O)_n$ in which $R_1$ is a member of the group consisting of ethylene radicals, propylene radicals, butylene radicals, hydroxypropylene radicals and hydroxybutylene radicals, $n$ is an integer of at least one, the phosphorus is attached to a terminal oxygen of at least one of said divalent radicals and at least a portion of the remainder of said divalent radicals terminating in hydrogen.

14. A phosphite according to claim 13 wherein the aldehyde is formaldehyde.

15. A polyoxyalkylated phenol ketone condensation product phosphite, said resin being characterized by etherification of the molecule at the phenolic oxygen by at least 2 divalent oxyalkylene radicals having the formula $(R_3O)_n$ in which $R_3$ is hydroxy propylene, $n$ is an integer of at least one, the phosphorus is attached to a terminal oxygen of at least one of said divalent radicals and at least a portion of the remainder of said divalent radicals containing hydroxyl groups.

16. A polyoxyalkylated phenol ketone condensation product phosphite, said resin being characterized by etherification of the molecule at the phenolic oxygen by at least 2 divalent oxyalkylene radicals having the formula $(R_1O)_n$ in which $R_1$ is a member of the group consisting of ethylene radicals, propylene radicals, butylene radicals, hydroxy propylene radicals and hydroxy butylene radicals, $n$ is an integer of at least one, the phosphorus is attached to a terminal oxygen of at least one of said divalent radicals and at least a portion of the remainder of said divalent radicals containing hydroxyl groups.

17. A product according to claim 3 wherein the phenol aldehyde resin is a novolak resin.

18. A product according to claim 2 wherein the phenol aldehyde resin is a novolak resin.

**References Cited** in the file of this patent

UNITED STATES PATENTS

| | | |
|---|---|---|
| 2,085,293 | Buffington | June 29, 1937 |
| 2,688,380 | MacHenry | Sept. 7, 1954 |
| 2,705,704 | Sorenson | Apr. 5, 1955 |
| 2,739,598 | Eirich | Mar. 27, 1956 |
| 2,743,259 | De Groote | Apr. 24, 1956 |
| 2,770,241 | Winkler | Nov. 13, 1956 |
| 2,893,399 | Jacoby | July 7, 1959 |
| 2,920,630 | Kinavy | Jan. 12, 1960 |
| 2,973,340 | Case | Feb. 28, 1961 |
| 3,006,346 | Golding | Oct. 31, 1961 |
| 3,038,881 | De Groote | June 12, 1962 |

OTHER REFERENCES

Ion Exchange Resins, by Robert Kunin, page 105, 2nd edition, published 1958 by John Wiley & Sons, New York.