(12) INTERNATIONAL APPLICATION PUBLISHED UNDER THE PATENT COOPERATION TREATY (PCT)

(19) World Intellectual Property Organization
International Bureau

(43) International Publication Date
8 June 2006 (08.06.2006)

PCT

(10) International Publication Number
WO 2006/060070 A1

(51) International Patent Classification:
H01R 43/01 (2006.01)

(21) International Application Number:
PCT/US2005/037452

(22) International Filing Date: 18 October 2005 (18.10.2005)

(25) Filing Language: English

(26) Publication Language: English

(30) Priority Data:
04028573.6 2 December 2004 (02.12.2004) EP

(71) Applicant *(for all designated States except US)*: **3M INNOVATIVE PROPERTIES COMPANY** [US/US]; 3M Center, Post Office Box 33427, Saint Paul, MN 55133-3427 (US).

(72) Inventors; and

(75) Inventors/Applicants *(for US only)*: **BARTHES, Guy, J.** [FR/FR]; 37, Boulevard du Chevran, F-74300 Cluses (FR). **METRAL, Guy** [FR/FR]; 37, Boulevard du Chevran, F-74300 Cluses (FR).

(74) Agents: **BURTIS, John, A.** et al.; 3M Center, Office of Intellectual Property Counsel, Post Office Box 33427, Saint Paul, MN 55133-3427 (US).

(81) Designated States *(unless otherwise indicated, for every kind of national protection available)*: AE, AG, AL, AM, AT, AU, AZ, BA, BB, BG, BR, BW, BY, BZ, CA, CH, CN, CO, CR, CU, CZ, DE, DK, DM, DZ, EC, EE, EG, ES, FI, GB, GD, GE, GH, GM, HR, HU, ID, IL, IN, IS, JP, KE, KG, KM, KP, KR, KZ, LC, LK, LR, LS, LT, LU, LV, LY, MA, MD, MG, MK, MN, MW, MX, MZ, NA, NG, NI, NO, NZ, OM, PG, PH, PL, PT, RO, RU, SC, SD, SE, SG, SK, SL, SM, SY, TJ, TM, TN, TR, TT, TZ, UA, UG, US, UZ, VC, VN, YU, ZA, ZM, ZW.

(84) Designated States *(unless otherwise indicated, for every kind of regional protection available)*: ARIPO (BW, GH, GM, KE, LS, MW, MZ, NA, SD, SL, SZ, TZ, UG, ZM, ZW), Eurasian (AM, AZ, BY, KG, KZ, MD, RU, TJ, TM), European (AT, BE, BG, CH, CY, CZ, DE, DK, EE, ES, FI, FR, GB, GR, HU, IE, IS, IT, LT, LU, LV, MC, NL, PL, PT, RO, SE, SI, SK, TR), OAPI (BF, BJ, CF, CG, CI, CM, GA, GN, GQ, GW, ML, MR, NE, SN, TD, TG).

[Continued on next page]

(54) Title: TOOL FOR INSERTING A WIRE INTO AN INSULATION DISPLACEMENT CONTACT AND KIT OF PARTS INCLUDING AT LEAST ONE TOOL

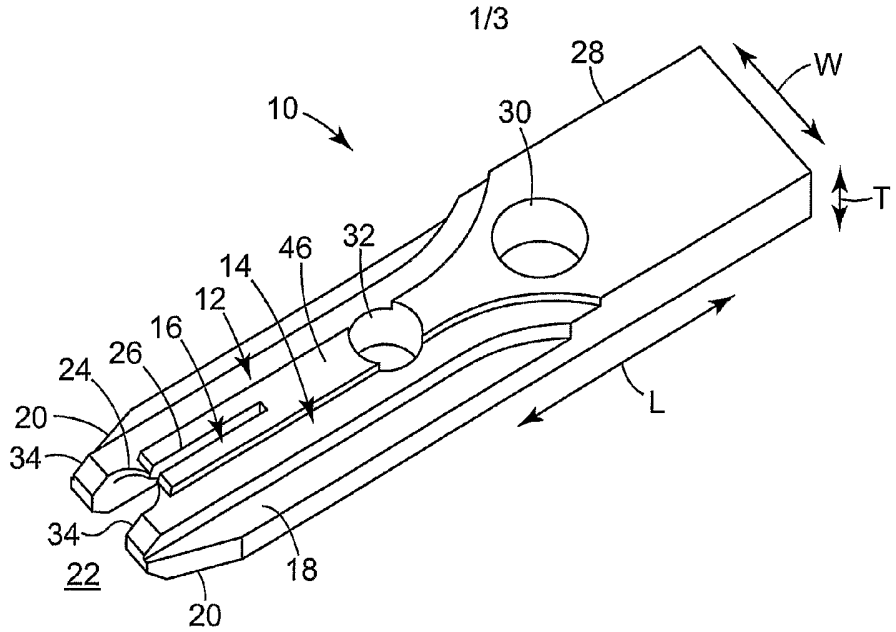

(57) Abstract: A tool for inserting a wire into an insulation displacement contact (IDC) has at least one head portion with a front portion, at least one protrusion being formed on the front portion so as to protrude from the front portion for a distance, which is smaller than the total width of the at least one protrusion, as seen parallel to that surface of the front portion, at which the at least one protrusion is formed.

WO 2006/060070 A1

Published:
— *with international search report*

For two-letter codes and other abbreviations, refer to the "Guidance Notes on Codes and Abbreviations" appearing at the beginning of each regular issue of the PCT Gazette.

Tool for Inserting a Wire into an Insulation Displacement Contact and Kit of Parts including at least one Tool

Technical Field

The invention relates to a tool for inserting a wire into an insulation displacement contact and a kit of parts including at least one tool.

Background

Especially in the field of telecommunications, many electrical connections are formed between wires and contacts. The wire usually has an insulation on the outside, and a metal core, for example of copper, which is to be connected to a contact in order to allow the transmission of a signal via the wire and the contact. As regards the contacts, insulation displacement contacts (IDCs) are widely used in the field of telecommunications. These contacts essentially have an open slit, which is somewhat narrower than the metal core of a wire and delimited by sharp edges. Thus, when the described wire is pushed into the slit, the sharp edges formed on the contact, cut the outer insulation of the wire as well as, at least to some, preferably small, extent, the metal core of the wire. Thus, electrical connection between the metal core of the wire and the contact is established.

Specific tools are used, especially in the field of telecommunications, in order to push a wire in the described direction so as to establish the electrical connection of the wire with the contact, which is usually contained in a telecommunications module. These tools in some instances do not only push the wire into the slit of the contact but also cut the wire so that any surplus or overlength can easily be

taken away. US 4,642,874 describes a tool for manually terminating conductors of multi-conductor cable into termination sections of electrical connectors.
EP 0 477 930 A2 relates to a hand-held tool for effecting terminations in a telecommunications module, in which a blade with a setting edge and a pivotable cutter for cutting a conductor wire, is used. DE 35 22 131 A1 describes a tool for terminating wires which comprises at a front portion thereof, a strip-like pushing section and a thin ridge which extends from the strip surface of the pushing section. In particular, the structure at the front portion of the disclosed tool, which is adapted to be inserted into an opening surrounding the contact in the telecommunications module, is specifically shaped so as to fit into the mentioned opening. EP 0 638 207 B1 relates to a tool for inserting wires into an insulation displacement connector having a first portion for locating the tool on a first connector type, and a second portion for locating the tool on a second connector type.

Summary of the Invention

The invention provides an improved tool for inserting a wire into an IDC which can, in a versatile manner, be used for inserting wires into contacts of different types of telecommunications modules, i.e. different structures of those components surrounding the contacts.

Generally, the tool described herein can have any suitable handling structure in order to perform the described function of inserting a wire into an IDC. In particular, the tool can be an automatic tool, to some extent, and the tool can, furthermore, be adapted to insert more than one wire simultaneously into IDCs. Usually, the tool will be a handheld tool for the manual insertion of wires into IDCs and will, for this purpose, have a handle. Moreover, the tool has at least one head portion which is generally

adapted to push a wire into the slit of an IDC. When the tool is formed so as to simultaneously allow the insertion of a plurality of wires, there can be more than one head portion with the described structure. Usually, the head portion is made of metal or any other suitable, sufficiently rigid material. Furthermore, the head portion can be interchangeable, i.e. the head portion can be attachable to and detachable from a handle portion of a tool, so as to adapt the tool to a particular situation by exchanging the head portion thereof.

The head portion comprises a front portion and a rear portion, described in more detail below. The front portion is the portion, with which the wire is actually pushed into the slit, and which is, at least to some extent, inserted into the telecommunications module. The front portion cannot only serve to push the wire, but it can also, for example, in cooperation with a counterblade formed at a telecommunications module, serve to shear the wire in order to cut any surplus or an overlength of the wire.

Furthermore, at least one protrusion is formed on the front portion so as to protrude from the front portion for a distance, which is smaller than the total width of the at least one protrusion, as seen parallel to that surface of the front portion, at which the at least one protrusion is formed. Thus, the protrusion can be called shallow or strip-like, with the main surface of the strip being substantially parallel to the mentioned surface, on which the protrusion is formed. In particular, the protrusion could be considered shallow or thin, as compared to a ridge, which protrudes for a distance approximately as long as the width thereof or even longer. In particular, the total width of more than one protrusion has to be considered, when two or more protrusions are formed adjacent each other. In other words, two or more protrusions can be formed on a

particular surface, possibly with a slit or gap, the purpose of which will be described below, between them. In other words, the protrusions can be spaced apart to some extent. Also in such a situation, the width of the combination of protrusions, i.e. the total width of the protrusions, is bigger than the distance, for which the protrusions protrude. In particular, the total width of the protrusions as such can be bigger than the protruding distance of the protrusions. This is at least the case for the total width of the protrusions including the width of any gaps or slits between them.

The at least one protrusion has the following effects with regard to improving the versatility of the novel tool. In the field of telecommunications there are telecommunication modules which, on the one hand, provide a structure, in which the IDCs are encapsulated in the plastic housing. On the other hand, there are types of telecommunications modules, in which the IDCs are not encapsulated. Previously, different tools had to be used for different types of telecommunications modules. In a situation, where a tool head is exchangeable, at least different head portions needed to be used. In contrast, the novel tool described herein can be used for both types of telecommunications modules, i.e. those which comprise structures, which encapsulate the IDCs, and those which do not have such a structure. In particular, the novel tool with the structure described herein can be used to terminate wires on at least three different types of telecommunications modules. These are, amongst others, known as STG, which are common in France, the most wide-spread telecommunications modules in Italy as well as the telecommunications modules, which are commercially available under the designation ID 3000 from Quante 3M Telecommunications, Neuss, Germany. Furthermore, the protrusion of the insertion tool is relatively shallow so that it can easily and inexpensively be formed by milling.

In particular, those areas, which are adjacent the desired protrusion, can easily be taken away, for example, by milling. Generally, the described shape of the protrusion leads to a simple structure.

As compared to a ridge, the protrusion of the novel tool has a height, for which it protrudes, which is smaller than its width. Additional advantages can be obtained when the protruding distance is significantly smaller than the width of the protrusion. For example, material will be saved when the protrusion is formed by milling of the adjacent areas. Furthermore, many types of telecommunications modules can be equipped with wires by using the tool described herein when the tool has the described, relatively shallow protrusion.

The surface of the protrusion, which is essentially parallel to that surface of the front portion at which the protrusion is formed, can constitute an end surface. In other words, there are no further protrusions, ridges or other portions formed on this surface of the protrusion. Rather, the surface of the protrusion forms an end or top surface. With this structure, the tool is of a simple construction, which can be produced inexpensively and fulfills the requirements. Apart there from, pivotable blades and similar components can be formed adjacent this surface.

As described above, the front portion will usually be inserted, at least to some extent, into the telecommunications module. In this context, it is advantageous when the front portion and/or at least one protrusion has at least one bevel at a tip end thereof. In other words, one or more inclined or beveled areas are formed at the tip end of the front portion in order to facilitate its insertion into a suitable cavity in the telecommunications module.

In some instances, in particular in some types of telecommunications modules, any cavities in the telecommunications module can be formed only in an upper part thereof. Furthermore, it can sometimes be sufficient, when the protrusion serves to abut a portion of the telecommunications module, only in certain areas, in order to position the inserting tool. In these cases, at least one protrusion can end at a distance from the tip end of the front portion in order to allow for the above-described situations.

The front portion can, moreover, comprise at least one notch at a tip end thereof. The wire, which is to be inserted into an IDC can be positioned in this notch and can reliably be terminated at the IDC by inserting the wire when the described notch locates it.

It has been found advantageous when the notch has a rounded contour, which to some extent conforms with the outer contour of a wire.

As regards the orientation of the notch, the notch can extend substantially perpendicular to that surface, on which the protrusion is formed. Thus, the wire is, when it is accommodated in the notch, orientated substantially perpendicular to the strip-like front portion as well as the protrusion formed thereon. With this orientation, the tool can be handled relative to a telecommunications module, into which the wire is to be inserted, with an orientation, which brings the described protrusion into effect.

As regards the above-described notch, this can additionally be formed in at least one protrusion. In other words, the protrusion extends to the area of the notch in order to achieve the above-described effect of the protrusion.

In certain situations there can be at least one protrusion, which ends at or before the notch. For specific structures of the telecommunications modules this can be advantageous for reliably positioning the insertion tool.

At least one protrusion can, furthermore, comprise a slit, which extends from the tip end thereof. In a similar manner, a slit can be located between adjacent protrusions. This slit has shown to improve the properties of the tool described herein. In particular, such a slit can be used to locate a blade-type element in the slit, which extends from the surface of the head portion, i.e. in the protruding direction of the one or more protrusions. This blade portion can be advantageous to securely push the wire into the IDC.

As mentioned above, the head portion of the novel tool has, on the one hand, a front portion, at which at least one protrusion is formed. On the other hand, the head portion has a rear portion. As regards the thickness of this rear portion, this can be substantially the same as the thickness of the front portion including any protrusions formed thereon. As regards the process for manufacturing the head portion, this essentially means that when a certain thickness is achieved, which corresponds to the final thickness of the rear portion, taking away any material adjacent the protrusions can produce any protrusions formed in the front portion. This can be accomplished in an inexpensive manner, for example, by milling. As an alternative, any suitable molding process, or a forging process in the case of a head portion made of metal, can be used.

The head portion can, moreover, include at least one opening. Such an opening can, for example, be used to attach one or more cutting blades, for example, pivotable

cutting blades in order to cut any surplus or overlengths of the inserted wire.

The head portion can also be formed integrally with any protrusions formed thereon. This provides an easy to handle and inexpensive structure of the head portion of the tool described herein.

In order to allow a safe insertion and pushing of a wire into an IDC, the novel tool preferably further comprises at least one blade-type element, which extends in the protruding direction of the at least one protrusion, i.e. in the thickness direction of the head portion.

In order to cut any wire overlength, it has been found advantageous to provide at least one cutting element in the novel tool.

Furthermore, safe cutting of wire overlength can be achieved by providing at least one pivotable cutting element.

Finally, the novel tool described herein provides specific advantages in a kit of parts, which further includes at least one wire and/or at least one telecommunications module containing at least one insulation displacement contact.

Brief Description of the Drawings

Hereinafter, the invention will be described by non-limiting examples thereof with reference to the drawings, in which:

Fig. 1 shows a perspective view of a head portion of the novel tool;

Fig. 2 shows a sectional view of another head portion of a novel tool in combination with a portion of a first type of telecommunications module;

Fig. 3 shows a sectional view of the head portion of Fig. 2 in combination with a portion of a second type of telecommunications module;

Fig. 4 shows a perspective view of yet another head portion of the novel tool; and

Fig. 5 shows a perspective view of the head portion shown in Fig. 1 installed in the novel tool.

Description of Preferred Embodiments of the Invention

As shown in Fig. 1, the head portion 10 of the novel insertion tool has a generally strip-like appearance with a front portion 12 and a rear portion 28. As seen in the drawing, the width W of the head portion 10 is, in the case shown, significantly smaller than the length L thereof. Furthermore, the thickness T is smaller than the width thereof. This leads to the general, strip-like appearance. In this context, it should be mentioned that throughout the application, all references to the width of any element are in the direction W, all references to the length of any element are in the direction L, and all references to the thickness of any element are in the direction T.

A first opening 30 is formed in the rear portion 28, and a second opening 32 is formed in the front portion. In the embodiment shown, the thickness T of the rear portion 28 is substantially the same as that of the front portion 12 including any protrusions 14, 16 formed thereon. Thus, those areas, which are adjacent the protrusions, can be formed by taking away the material in these areas. In

particular, the protrusions 14, 16 are formed on a surface 18 of the front portion 12, which can be described to be one of the "main" surfaces of the front portion 12 having a strip-like shape, as compared to the small side faces of the front portion 12. That surface of the protrusion 16, which is substantially parallel to the described surface 18 of the front portion 12, can be considered an end or top portion, as there are no further ridges or similar portions extending there from.

The front portion 12 has a bevel 20 at the tip end thereof, which reduces the width of the front portion 12 at the mentioned tip. In the case shown, the thickness T is also reduced by a second bevel 34 at the tip end 22. A rounded notch 24 is formed at the tip end 22 and allows the wire (not shown) to be accommodated in the notch so as to extend in the thickness direction T of the head portion 10. The first protrusion 14 extends into the area of the notch, so that the notch 24 is also formed in this protrusion 14. In other words, the notch 24 is formed in an area, where the total thickness T of the head portion 10 shown is constituted by the front portion 12 and the protrusion 14 formed thereon. In contrast, the second protrusion 16 terminates at the notch 24, so that it does not contribute to the thickness T of that area, where notch 24 is formed. Moreover, the bevel 34, formed in the thickness direction, is formed on protrusion 14. The second protrusion 16 has a width W, which is less than that of the first protrusion 14 and serves to position the tool (not shown) comprising the tool head of Fig. 1, as follows.

As shown in Fig. 2, in an embodiment of a telecommunications module, of which a portion 36 is shown, the IDC 38 can be encapsulated on both sides. In other words, the legs of the IDC, which are visible as rectangles in Fig. 2, are surrounded by plastic material of the telecommunications module 36 with the exception of a channel 40, into which the

wire (not shown) is to be inserted. With this structure encapsulating the IDC 38, the protrusion 16 formed on the head portion 10 serves to position the tool relative to the telecommunications module 36. In particular, in use, the protrusion 16 abuts the outer surface of the telecommunications module. In this context, it is noted that the head portion 10, shown in Fig. 2, is of a somewhat different structure than that of Fig. 1, as it lacks the other protrusion 14. However, this does not affect the purpose of the protrusion 16, as described above.

Fig. 3 shows the use of the head portion 10 of Fig. 2 with a different type of telecommunications module 42. In this case, the legs of the IDC 38 are not fully encapsulated. It can be taken from the figure, that the portion (as seen in the figure) above the IDC 38 is identical for Figs. 2 and 3. However, in Fig. 3, the IDCs are exposed at the lower portion when the tool head 10 is used to insert a wire into the IDC 38, particularly in a direction perpendicular to the drawings of Figs. 2 and 3, the protrusion 16 can, as shown in Fig. 3, enter the cavity 44, to which the IDC 38 is exposed. The protrusion 16 serves to push the wire at a location close to the IDC 38, i.e. in the cavity 44, so that a reliable insertion of the wire can be achieved. Furthermore, when the protrusion 16 is used, possibly with a counter-blade, which can be provided at the telecommunications module, in particular the IDC thereof, to shear a wire in order to cut any surplus or overlength there from, it can be ensured that the over length has the appropriate length. Furthermore, Figs. 2 and 3 only show examples of telecommunications modules. However, the tool described herein can be used in connection with other types of telecommunications modules. In particular, the protrusion 16 can be intended to abut an IDC directly and not a portion of the telecommunications module.

Fig. 4 shows a perspective view of yet another form of the head portion 10. As regards the general appearance, the head portion 10 shown in Fig. 4 is similar to that of Fig. 1 so that the general description does not need to be repeated. However, the "upper" protrusion 16 (Fig. 1), which comprises the end surface 46 has a smaller width and can, in the embodiment of Fig. 4, be described to be constituted by two relatively thin protrusions 48, 50. Between these protrusions 48, 50, a slit 26 is formed, which, as for the embodiment of Fig. 1, serves to allow a blade-type element (not shown in Figs. 1 to 4, see Fig. 5) to be inserted and located therein. The blade-type element will, in the completed state, extend substantially perpendicular to the end surface 46, i.e. substantially in the direction of a wire which is inserted into notch 24. During the movement of pushing the wire into an IDC, the blade-type element serves to apply the pushing force to the wire.

As can be taken from Fig. 4, the protrusions 48, 50 as such are somewhat thinner than protrusion 16 shown in Fig. 1. In a specific embodiment, each of the protrusions is 0.4 mm wide and 0.45 mm high. However, as described above, their total width has to be considered so that the total width is again greater than the height. In particular, taking the slit 26 between the protrusions 48, 50 into account, will render the total width 1.1 mm. This total width is to fulfill the above-mentioned requirement. As regards the structure shown in Fig. 4, it should be mentioned that the areas adjacent the protrusions 48, 50 are removed in a front part only, and the removed areas start at inclinations 52 unlike in the head portion shown in Fig. 1, where the areas adjacent protrusion 16 are removed for a further distance and are formed rounded towards the sides.

Finally, it should be mentioned that the "main surfaces" of the one or more protrusions, such as the end surface 46

formed on protrusions 16, 48 and 50, are substantially parallel to that surface of the front portion 12, on which the protrusions are formed. The "main surface" of the protrusions is that surface, which can be described to be elongate and wide to some extent, compared to the small, shallow side faces of the strip-like head portion or its protrusions. Moreover, the slit 26 between protrusions 48 and 50 only extends from the tip end thereof for a certain distance, for example two thirds of their length, and protrusions 48, 50 are united in the area extending from the slit 26 towards the rear portion 28.

Fig. 5 shows a perspective view of the head portion 10 of Fig. 1 installed in the novel tool. It is to be noted that the head portion 10 of Fig. 4 can be combined with the further components of the tool, as detailed below, in the same manner. As shown in Fig. 5, a blade-type element 54 is inserted into the slit 26 so as to protrude from the head portion 10 in the thickness direction thereof. In order to allow the insertion of the blade-type element 54, the slit 26 is formed, in the embodiment shown, not only in protrusion 16, but also in protrusion 14 as well as at least a part of the front portion 12. The blade-type element 54 essentially has the structure of a relatively thin plate and serves to push a wire into an IDC. For this purpose, the wire is placed in the notch 24 of the head portion 10 so as to further extend along the front side of blade-type element 54, which is visible as a small strip extending vertically in Fig. 5.

The wire (not shown) which is to be pushed into an IDC, further extends into notch 58 of a first cutting element 56. The first cutting element 56 is fixed with regard to blade-type element 54 and head portion 10 of the tool. A second cutting element 60 having a cutting edge 62 is provided pivotably about an axis, which is constituted by a screw 64. During the insertion of the wire to the IDC, in particular

at the end of this movement, the second cutting element 60 is caused to pivot in a clockwise direction so that its cutting edge 62 moves over the notch 58 of the first cutting element 56 and cuts any overlength of wire, which extends beyond the first cutting element 56 into the area of the second cutting element 60.

It can finally be mentioned, that the rear opening 30 (see Fig. 1) can be used to allow the attachment of screw 64. Moreover, at least the front contours of notches 24 and 58 are preferably congruent and aligned with each other, and the front edge of blade-type element 54, as described above, extends in line with the bottom of notches 24, 58. As shown in Fig. 5, notch 24 can extend somewhat inclined towards the bottom (which is not visible in Fig. 5) of the head portion 10, and the blade-type element 54, which generally has a rectangular structure, can comprise a bevel corresponding to the inclined shape of the notch.

Claims:

1. A tool for inserting an elongate wire into an insulation displacement contact (IDC), the tool having at least one head portion (10) with a front portion (12), said front portion (12) having a width, a length and a thickness dimension, and having at least one protrusion (14, 16, 48, 50) being formed on the front portion (12) and protruding from the front portion (12) by a distance, which is smaller than the total width of the at least one protrusion (14, 16, 48, 50), in the width-direction of the front portion (12), characterized in that the protrusion protrudes from the front portion in the length direction of the wire to be inserted.

2. The tool in accordance with claim 1, wherein the protrusion (14, 16, 48, 50) protrudes for a distance which is significantly smaller than the width thereof.

3. The tool in accordance with claim 1 or 2, wherein a surface of the protrusion (14, 16, 48, 50) which is substantially parallel to that surface (18) of the front portion (12) at which the protrusion (14, 16, 48, 50) is formed, constitutes an end surface (46).

4. The tool in accordance with any of the preceding claims, wherein the front portion (12) and/or at least one protrusion (14, 48, 50) has at least one bevel (20, 34) at a tip end (22) thereof.

5. The tool in accordance with any of the preceding claims, wherein at least one protrusion (16, 48, 50) ends at a distance from the tip end (22) of the front portion (12).

6. The tool in accordance with any of the preceding claims, wherein the front portion (12) has at least one notch (24) at a tip end (22) thereof.

7. The tool in accordance with claim 6, wherein the notch (24) has a rounded contour.

8. The tool in accordance with claims 6 or 7, wherein the notch (24) is also formed in at least one protrusion (14).

9. The tool in accordance with any of claims 6 to 8, wherein at least one protrusion (16, 48, 50) ends at or before the notch (24).

10. The tool in accordance with any of claims 6 to 9, wherein the notch (24) extends substantially perpendicular to that surface of the front portion (12) at which the protrusion (14, 16, 48, 50) is formed.

11. The tool in accordance with any of the preceding claims, wherein at least one protrusion (16) comprises a slit (26) extending from the tip end thereof.

12. The tool in accordance with any of the preceding claims, wherein the head portion (10) has a thickness at a rear portion (28) thereof, which is substantially the same as the thickness of the front portion (12) including any protrusions (14, 16, 48, 50) formed thereon.

13. The tool in accordance with any of the preceding claims, wherein the head portion (10) includes at least one opening (30, 32).

14. The tool in accordance with any of the preceding claims, wherein the head portion (10) is formed integrally with the at least one protrusion (14, 16, 48, 50).

15. The tool in accordance with any of the preceding claims, further comprising at least one blade-type element (54) extending from the front portion (12) in the protruding direction of the at least one protrusion (14, 16, 48, 50).

16. The tool in accordance with any of the preceding claims, further comprising at least one cutting element (56, 60) for cutting a wire overlength.

17. The tool in accordance with claim 16, wherein at least one cutting element (60) is pivotable.

18. A kit of parts including at least one tool in accordance with any of the preceding claims and at least one wire and/or at least one telecommunications module containing at least one insulation displacement contact.

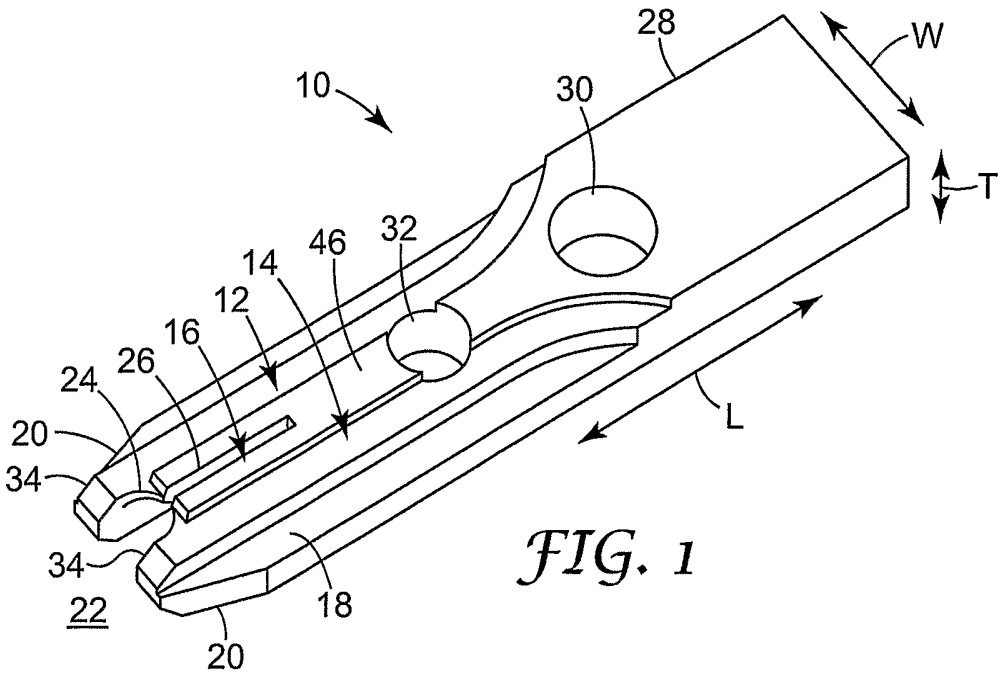

FIG. 1

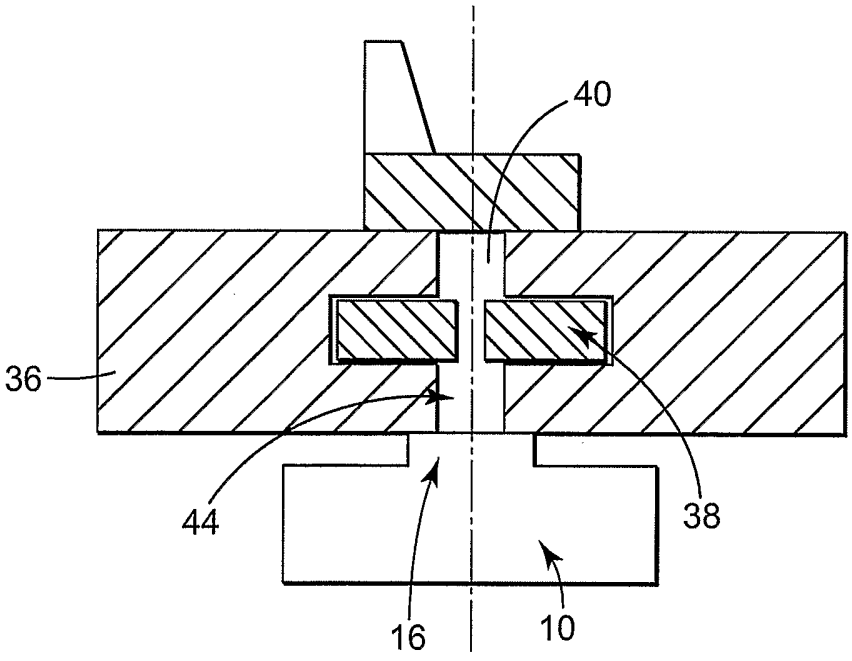

FIG. 2

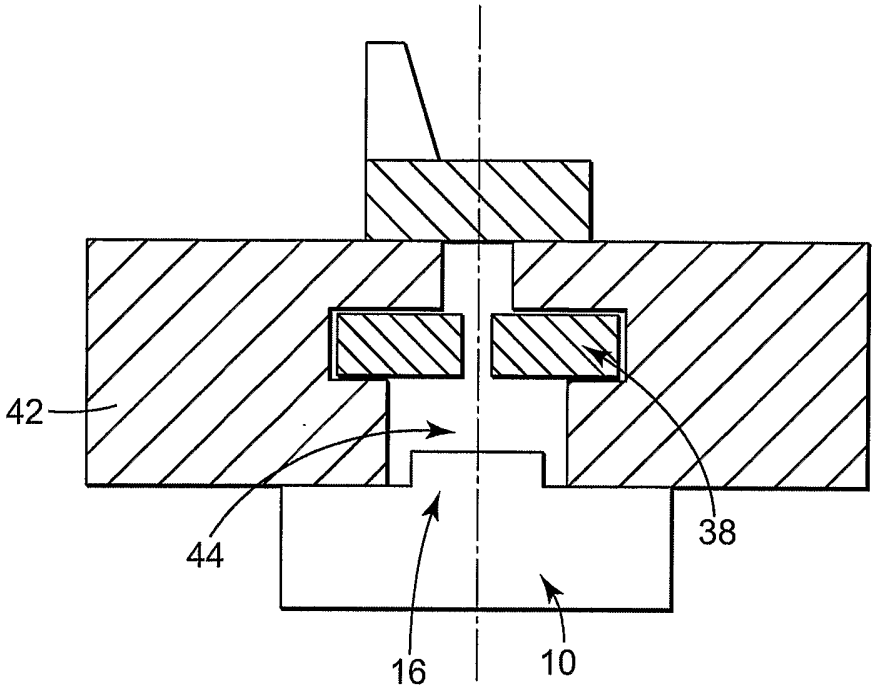

FIG. 3

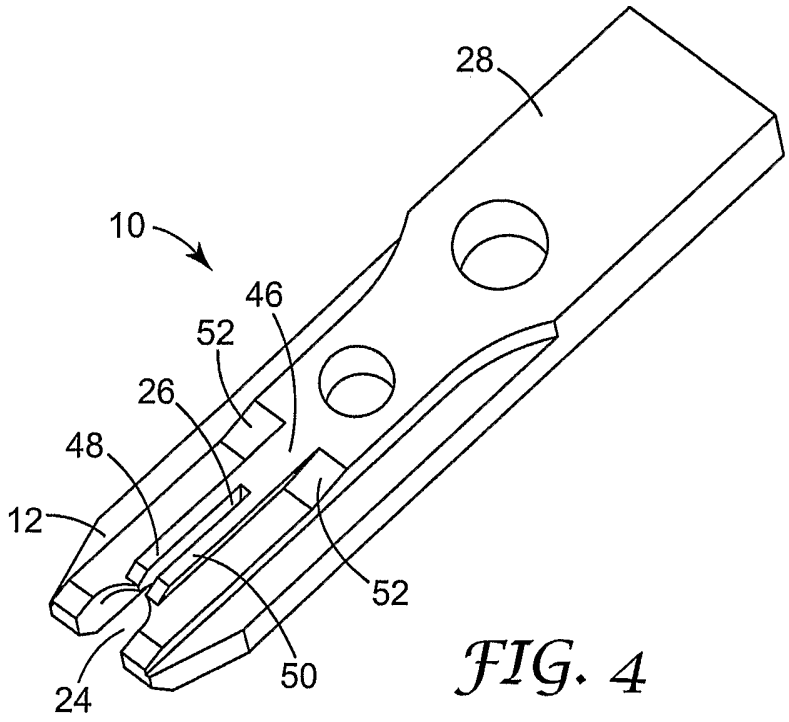

FIG. 4

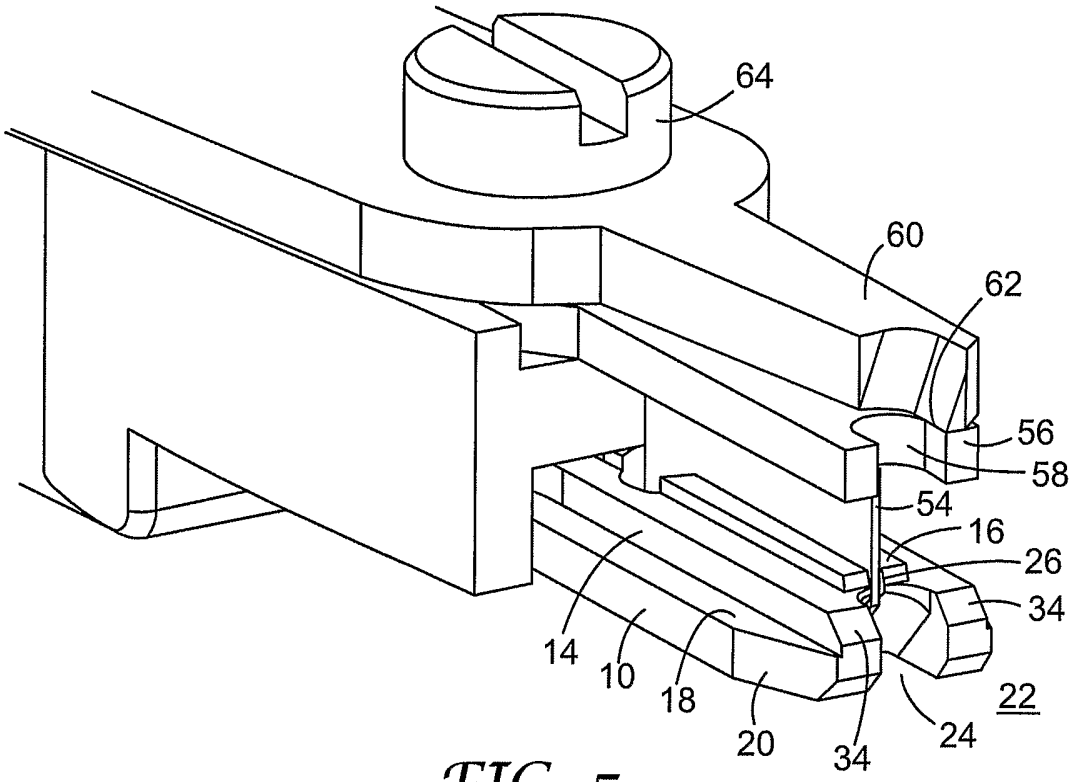

FIG. 5

INTERNATIONAL SEARCH REPORT

Inter nal application No
PCT/US2005/037452

A. CLASSIFICATION OF SUBJECT MATTER
H01R43/01

According to International Patent Classification (IPC) or to both national classification and IPC

B. FIELDS SEARCHED

Minimum documentation searched (classification system followed by classification symbols)
H01R

Documentation searched other than minimum documentation to the extent that such documents are included in the fields searched

Electronic data base consulted during the international search (name of data base and, where practical, search terms used)
EPO-Internal

C. DOCUMENTS CONSIDERED TO BE RELEVANT

Category*	Citation of document, with indication, where appropriate, of the relevant passages	Relevant to claim No.
A	US 5 951 319 A (LIN ET AL) 14 September 1999 (1999-09-14) figure 8	1-18
A	US 4 194 256 A (KNICKERBOCKER, ROBERT H) 25 March 1980 (1980-03-25) column 2, line 18 - line 31; figures 3,4	1
A	US 6 615 480 B1 (MURPHY STACEY A) 9 September 2003 (2003-09-09) figure 1	1
A	US 5 099 570 A (GERHARD, JR. ET AL) 31 March 1992 (1992-03-31) figures 3-6	1

-/--

[X] Further documents are listed in the continuation of Box C.

[X] See patent family annex.

* Special categories of cited documents :

"A" document defining the general state of the art which is not considered to be of particular relevance

"E" earlier document but published on or after the international filing date

"L" document which may throw doubts on priority claim(s) or which is cited to establish the publication date of another citation or other special reason (as specified)

"O" document referring to an oral disclosure, use, exhibition or other means

"P" document published prior to the international filing date but later than the priority date claimed

"T" later document published after the international filing date or priority date and not in conflict with the application but cited to understand the principle or theory underlying the invention

"X" document of particular relevance; the claimed invention cannot be considered novel or cannot be considered to involve an inventive step when the document is taken alone

"Y" document of particular relevance; the claimed invention cannot be considered to involve an inventive step when the document is combined with one or more other such documents, such combination being obvious to a person skilled in the art.

"&" document member of the same patent family

Date of the actual completion of the international search	Date of mailing of the international search report
31 January 2006	08/02/2006

Name and mailing address of the ISA/	Authorized officer
European Patent Office, P.B. 5818 Patentlaan 2 NL – 2280 HV Rijswijk Tel. (+31–70) 340–2040, Tx. 31 651 epo nl, Fax: (+31–70) 340–3016	Demol, S

INTERNATIONAL SEARCH REPORT

Inter nal application No
PCT/US2005/037452

C(Continuation). DOCUMENTS CONSIDERED TO BE RELEVANT

Category*	Citation of document, with indication, where appropriate, of the relevant passages	Relevant to claim No.
A	US 4 656 725 A (KNICKERBOCKER ET AL) 14 April 1987 (1987-04-14) figure 3	1
A	US 5 561 898 A (WHITE ET AL) 8 October 1996 (1996-10-08) cited in the application abstract	

INTERNATIONAL SEARCH REPORT

ormation on patent family members

Inter nal application No
PCT/US2005/037452

Patent document cited in search report	Publication date	Patent family member(s)	Publication date
US 5951319 A	14-09-1999	NONE	
US 4194256 A	25-03-1980	CA 1119786 A1	16-03-1982
US 6615480 B1	09-09-2003	NONE	
US 5099570 A	31-03-1992	NONE	
US 4656725 A	14-04-1987	CA 1257077 A1	11-07-1989
		DE 3623258 A1	15-01-1987
		FR 2584875 A1	16-01-1987
		GB 2177952 A	04-02-1987
		JP 62019385 A	28-01-1987
US 5561898 A	08-10-1996	AU 663962 B2	26-10-1995
		AU 4265993 A	29-11-1993
		DE 69305635 D1	28-11-1996
		DE 69305635 T2	15-05-1997
		DK 638207 T3	24-03-1997
		EP 0638207 A1	15-02-1995
		WO 9322808 A1	11-11-1993
		GB 2284567 A	14-06-1995
		NZ 252705 A	26-05-1995