March 28, 1961 A. H. BAGNELLE 2,976,661

DEVICES FOR APPLYING SEALING BANDS TO ARTICLES

Filed Aug. 11, 1958 2 Sheets-Sheet 1



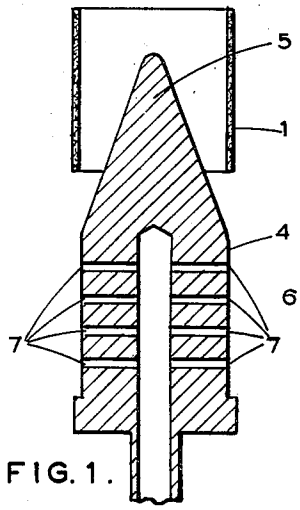

FIG. 1.

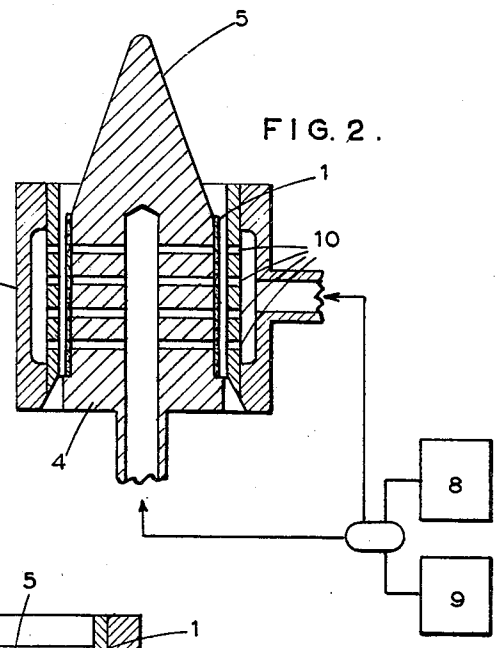

FIG. 2.

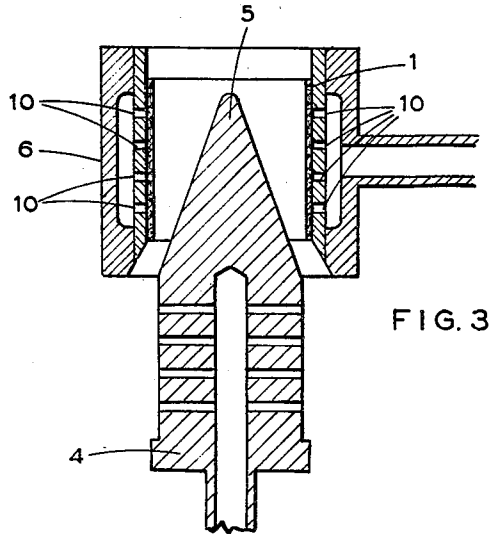

FIG. 3.

INVENTOR
ARTHUR HAROLD BAGNELLE

BY
William R. Liberman

ATTORNEY

March 28, 1961 A. H. BAGNELLE 2,976,661

DEVICES FOR APPLYING SEALING BANDS TO ARTICLES

Filed Aug. 11, 1958 2 Sheets-Sheet 2

FIG. 4.

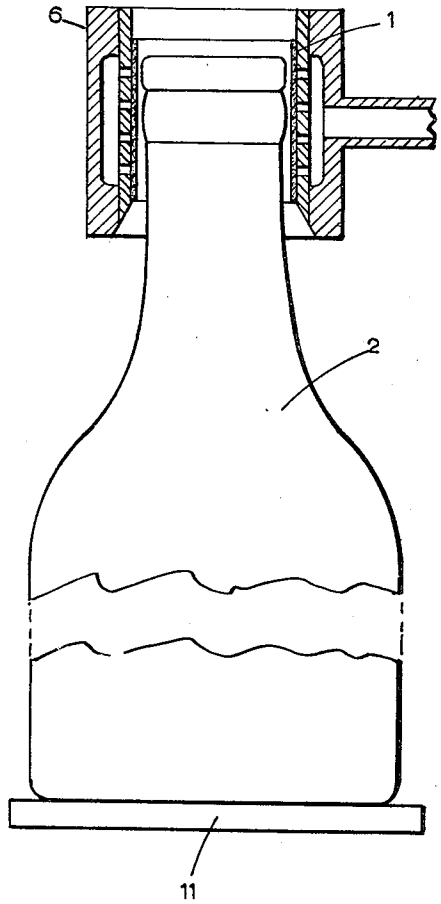

FIG. 5.

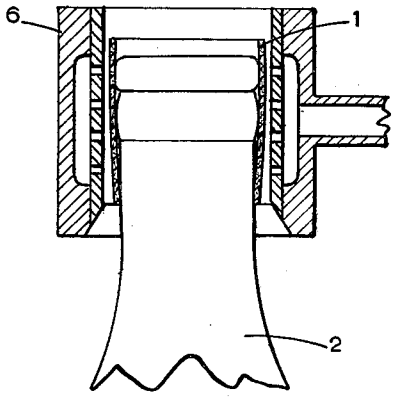

FIG. 6.

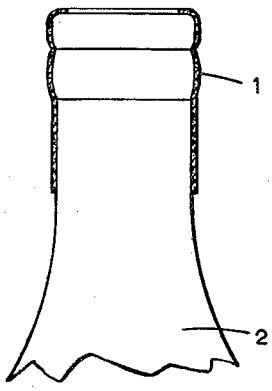

INVENTOR

ARTHUR HAROLD BAGNELLE

BY

William R. Liberman

ATTORNEY

United States Patent Office 2,976,661
Patented Mar. 28, 1961

2,976,661

DEVICES FOR APPLYING SEALING BANDS TO ARTICLES

Arthur Harold Bagnelle, Waltham Cross, England, assignor to Albro Fillers & Engineering Company Limited, Ponders End, England, a British company

Filed Aug. 11, 1958, Ser. No. 754,465

Claims priority, application Great Britain Aug. 16, 1957

4 Claims. (Cl. 53—292)

This invention relates to devices for applying sealing bands or rings of regenerated cellulose or other suitable material or for applying capsules to bottles or other articles.

According to the present invention there is provided a device for applying sealing bands, rings, capsules or like members to bottles or other articles comprising a former over which can be arranged a member to be fitted to an article the said former having ports through which suction can be applied to hold the inside of the said member in contact with the former and through which air under pressure can be applied to release the said member from the former, and an applicator head in which the former and the article can be positioned in succession, the said head having ports through which suction can be applied to hold the said member in contact with the head and through which air under pressure can be supplied to release the said member from the article.

It is well known to seal bottles by means of continuous bands of regenerated cellulose which are fitted tightly over the necks of the bottles and over part of the tops of the bottle stoppers or other closures. In one device for fitting such bands to bottles, the rings are supplied from a magazine in a moist and flat or collapsed condition and are then opened to form an open tube which is placed over the neck of the bottle and allowed to shrink tightly on the neck. The band can be so positioned around the bottle that it extends slightly proud of the top of the neck and will therefore extend over part of the top of the bottle closure on shrinkage.

With a view to providing an improved device for fitting sealing bands to the necks of bottles or other articles the present invention accordingly also provides a device comprising a former over which a partly opened continuous band can be fitted, the said former having ports through which suction can be applied to hold the inside of the band in contact with the former and through which air under pressure can be supplied to expand the band out of contact with the surface of the former, and an applicator head in which the former and the article to which the band is to be applied can be positioned in succession, the said head having ports through which suction can be applied to draw the band into contact with the head and through which air under pressure can be supplied to close the band around the article.

The accompanying drawings are diagrams illustrating six stages in the application of a sealing band to a bottle with a device according to a preferred embodiment of the invention. As shown in the drawings, a device for the application of sealing bands 1 to bottles 2 or other articles comprising a magazine 3 from which continuous bands or rings of regenerated cellulose or other material having similar characteristics can be delivered in a moist and partly open condition to a former 4. The former 4 has a generally cylindrical shape, but has a pointed portion 5 at one end and if desired has two

flats on opposite sides. This former 4 is movable so that its pointed end 5 can enter a partly open band 1 (Figure 1) delivered from the magazine 3, the movement being continued until the band 1 surrounds the cylindrical portion of the former 4 after which the former can move away from the magazine and into an applicator head 6 (Figure 2). The cylindrical portion of the former 4 has a number of ports 7 which can be connected to a suitable source 8 of negative pressure so that suction can act through the ports 7 on the inside of the band 1 and hold it in contact with the former 4.

The applicator head 6 is of generally cylindrical construction with open ends and can receive the former 4 with the sealing band 1 fitted thereon. When the former 4 has moved into position in the head 6 shown in Figure 2, the supply of suction to the ports 7 in the former is automatically cut off by any suitable valve mechanism and air under positive pressure from a source 9 is applied through the same ports 7, or if desired a second set of ports in the former, to expand the band out of contact with the cylindrical wall of the former. The inside wall of the applicator head 6 is provided with ports 10 through which suction can be applied to draw the expanded band 1 on to the wall and hold it thereon as shown in Figure 3. The former 4 is then withdrawn from the head and the neck of the bottle 2 to be sealed is moved into the head 6 on a suitable carrier 11 (Fig. 4); alternatively the head 6 can be moved over the bottle. The supply of suction to the ports 10 in the applicator head 6 is then automatically cut off and replaced by the supply of air under pressure to the same or additional ports in the inside wall of the head thereby to close the band 1 around the neck of the bottle 2 (Figure 5). The band will shrink on drying to fit closely against the neck, the air blown on to the band from the head assisting the drying.

The shapes of the former and head can be modified to enable the device to be used for the application of sealing bands to articles which do not have a circular cross-section.

What I claim is:

1. An apparatus of the character described for applying sealing bands, rings, capsules or like tubular devices to bottles or other articles, comprising a head member including a substantially cylindrical inner face having inwardly directed first ports formed therein, a former member provided with a substantially cylindrical side face having outwardly directed second ports formed therein, said former member being movable between a telescopic registering position within said head member and a position external of said head member and adapted to engage one of said tubular devices in a former member embracing position, means connecting some of said second ports to a source of negative pressure while said former member is out of registry with said head member to draw said tubular device carried thereby into snug embracement therewith and connecting some of said second ports to a source of positive pressure when said tubular device carrying former member is in its full head member registering position, and connecting some of said first ports to a source of negative pressure upon the full registry of said tubular device carrying former member with said head member whereby to effect the radial expansion of said tubular device and its transfer from said former member to said head member, and connecting some of said first ports to a source of positive pressure upon the retraction of said former member from said head member and the insertion of said article therein to effect the transfer of said tubular device from said head member to said article.

2. An apparatus in accordance with claim 1, wherein said head member inner face and said former member

side face are in close, parallel confrontation when said former member is in telescopic registry with said head member.

3. An apparatus in accordance with claim 1, wherein said head member is open ended.

4. An apparatus in accordance with claim 1, wherein said former member is provided with a tapered leading end.

References Cited in the file of this patent

UNITED STATES PATENTS

2,036,105	Strout	Mar. 31, 1936
2,732,115	Allen	Jan. 24, 1956
2,771,725	Carter	Nov. 27, 1956
2,815,629	Eddison et al.	Dec. 10, 1957