Aug. 20, 1963 W. P. KENNEDY 3,101,396

PLURAL SWITCH COMBINATION CONTROL FOR ENTRANCE LIGHT AND BELL HAVING PNEUMATIC DELAY MEANS FOR OPENING THE ENTRANCE LIGHT SWITCH

Filed Dec. 10, 1959

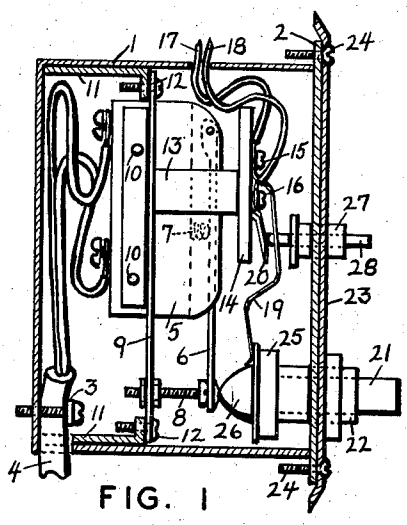

FIG. 1

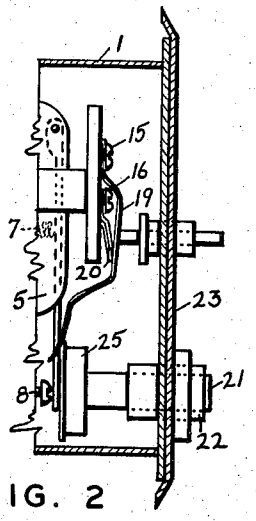

FIG. 2

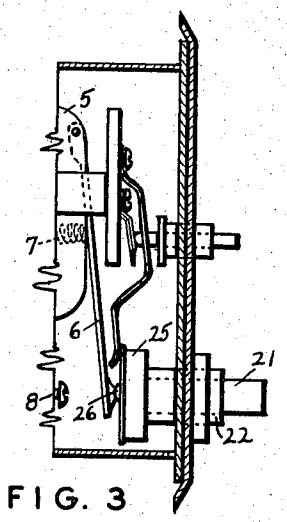

FIG. 3

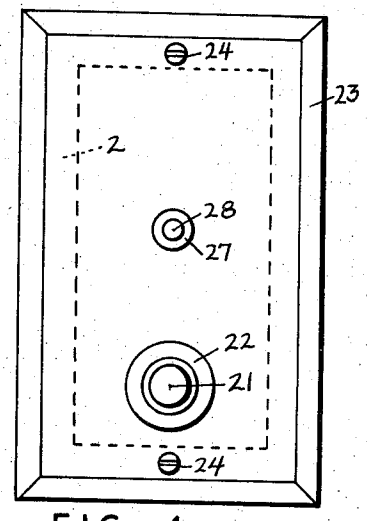

FIG. 4

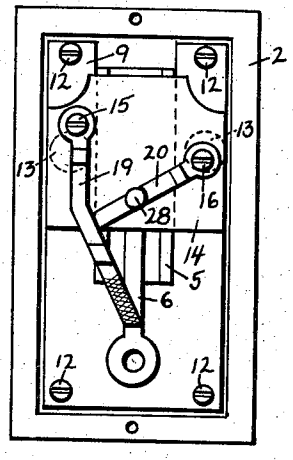

FIG. 5

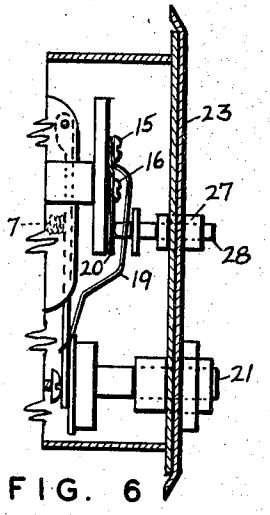

FIG. 6

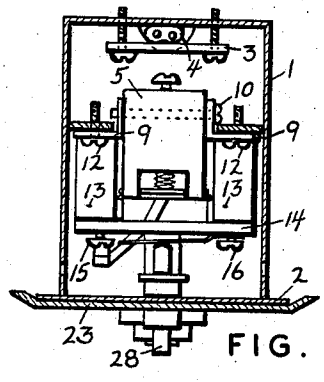

FIG. 7

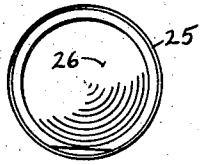

FIG. 8

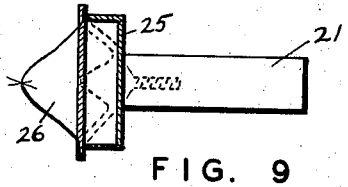

FIG. 9

INVENTOR.

William P. Kennedy

United States Patent Office 3,101,396 Patented Aug. 20, 1963



3,101,396

# PLURAL SWITCH COMBINATION CONTROL FOR ENTRANCE LIGHT AND BELL HAVING PNEUMATIC DELAY MEANS FOR OPENING THE ENTRANCE LIGHT SWITCH

William P. Kennedy, 304 Freyer Drive, Marietta, Ga.

Filed Dec. 10, 1959, Ser. No. 858,802
2 Claims. (Cl. 200—34)

This invention relates to entrance signaling systems, commonly known as door bells, and entrance illuminating means, each of which are electrically powered, and is particularly concerned with a device that would provide means to enable a person to cause an entrance light or lights to illuminate as a result of his pushing a door bell button, with said light remaining on a predetermined interval and then automatically turning off.

A number of devices or systems for this purpose have been tried in the past but were intricate in structure, expensive, and difficult to install and maintain, the usual method embodying the use of entirely electrical components such as relays, rectifiers, capacitors, solenoids, and the like in various combinations. The present invention, using mechanical methods of controlling signal and light switches in such a system is considerably less expensive to manufacture and install, more durable and of a construction such as to enable a person unskilled in the electrical arts to easily install and maintain. The device consists of a single unit and may be added to an existing door bell and entrance light system by simply replacing the original door bell switch with the device and wiring the entrance light switch of the device to the existing entrance light toggle switch.

The structure of the present invention is such as to provide in addition to the aforesaid means for a user to temporarily illuminate the entrance by the act of pushing the door bell button but also to furnish means to avoid the activation of the signal bell in such cases as a person leaving the premises and requiring a short interval of light without the signal operating needlessly.

In accordance therewith, it is among the primary objects of the present invention to provide a novel, simple, and improved device which will activate a door bell and a light located for illuminating said door upon pressure being applied to a single door bell button, with said light automatically turning off after a predetermined length of time.

Another object of the invention is to provide a device of the character described with means to preclude the operation of the door bell when the button is pushed by a user who wishes an interval of light only.

Numerous other objects, features, and advantages of the present structure will be apparent from the consideration of the following specification taken in conjunction with the accompanying drawings, in which:

FIG. 1 is a side sectional view of the device with its electrical wiring leads shown attached and showing the door bell and entrance light switches in "off" position.

FIG. 2 is a fragmentary side sectional view of FIG. 1, with the wiring and part of the housing not shown, and showing the door bell switch in "on" position and the entrance light switch in "off" position.

FIG. 3 is a view of FIG. 2, showing the door bell switch in "off" position and the entrance light switch in "on" position.

FIG. 4 is a front view of the device showing the cover plate and the push buttons.

FIG. 5 is a front view of the device with the cover plate removed, showing the switch levers.

FIG. 6 is a view of FIG. 2, showing means in operation to prevent electrical contact of the door bell switch operating components when the light is wished but not the signal.



FIG. 7 is a plan sectional view of the device looking through its top.

FIG. 8 is a front view in enlarged detail of a diaphragm which forms a part of the device.

FIG. 9 is a side view of the door bell push button and the diaphragm shown in FIG. 8, and includes a sectional view of the diaphragm housing for mounting the diaphragm to one end of the push button.

Referring to the drawings, the numeral 1 indicates the device's housing which may be defined as a box of lightweight metal, rectangular in shape, one side open and incorporating a flange 2 around the open side. This box is fastened by means of nails or screws into the wall of a building in a location suitable for a door bell button with the flange side of the box being against the exterior of the wall. An opening including a clamp 3 is at the rear of the box for stationing one end of an electrical conduit 4 which is attached to the terminals of a lever switch 5 which controls current flow to an entrance light. This switch is of a type readily found on the market and incorporates a lever 6 which is urged by the spring 7 in a direction away from the switch body. In the position of the lever close to the switch body, as shown in FIG. 1, the switch is in "off" position and in the position of the lever away from the switch body, as shown in FIG. 3, the switch is in "on" position, and is in "on" position throughout its arc of travel except slightly before being pressed against the adjustable stop bolt 8 at which time it causes the switch to be in "off" position and continues in "off" position as it rests against the bolt 8. The switch is mounted to a flanged plate 9 by means of the bolts 10 with the plate 9 being removably secured to the brackets 11, a part of the housing 1, by means of the bolts 12. A space sufficient to contain the extra length of the wires of the conduit 4, as shown in FIG. 1, is provided so that electrical connection may be made to the switch with it and its attached plate 9 outside the housing 1 and then mounting the plate in the housing.

As shown in FIGS. 1 and 5, a pair of brackets 13 are mounted to the plate 9 and support a sheet of nonconductive plastic 14 of a thickness to properly threadedly station the bolts 15 and 16. These bolts are of conductive material and afford means of connecting the wiring leads 17 and 18 of a low-voltage door bell system to the conductive spring leaves 19 and 20. As shown in FIG. 1, there is no contact of these leaves in normal position but as shown in FIG. 2 will contact and afford current flow through the door bell system upon a person pushing inwardly the plunger 21. This plunger, which resembles a door bell button for ready identification by a caller, is slideably mounted in a collar 22 on a cover plate 23 which is removably mounted over the open side of the housing 1. The cover plate is of a weatherproof and decorative finish and is held to the flange 2 by means of bolts 24.

As shown in FIG. 9, the plunger 21 is threadedly connected to a cupped housing 25 which includes a rubber pneumatic diaphragm 26, obtainable commercially, which is shown in FIG. 9 and in FIG. 1 in normal position. This diaphragm, if its attached plunger is pushed as shown in FIG. 2, will retract into its housing and when pressure on the plunger is released will slowly resume its original shape. The time required by the commercial diaphragm to regain its normal position is about one minute which makes its use ideal for the present device. As shown in FIG. 1, the forward tip of the diaphragm holds the entrance light switch lever 6 in "off" position, the diaphragm is shown forced by a user to retracted position in FIG. 2, and is shown beginning its resume to normal position in FIG. 3. It will be understood that during the time the

retracted diaphragm is regaining its normal shape the entrance light will be "on" but when the normal shape of the diaphragm is regained the light will be "off." Each push of the plunger **21** will initiate this cycle.

When the plunger is pushed it also moves the spring leaf **19** into contact with the spring leaf **20** thereby completing the door bell electrical circuit and ringing the bell. This action is shown in FIGS. 1 and 2. The expansive force of the spring leaf **19** and the lever spring **7** is sufficient to maintain the plunger **21** in extended position as shown in FIG. 1 unless the plunger is forcibly pushed by the user.

As shown in FIG. 5, the free end of the spring leaf **19** is coated with a non-conductive material to avoid any electrical short circuit as a result of its contact with the diaphragm housing as indicated in FIG. 1.

Slideably mounted in a collar **27** in the cover plate **23** is a plunger **28** of smaller size than the door bell button plunger **21**. This plunger provides means for a user to push the spring leaf **20** into such position that there will be no contact with spring leaf **19** when plunger **21** is pushed and plunger **28** is held in pushed position. This action is shown in FIG. 6 and enables the use of the device for illuminating the entrance for the stated time without ringing the door bell.

The invention having been set forth, what I claim as new and useful is:

1. A combination control mechanism having control means to cause an electrically powered entrance bell circuit switch to open or close, said switch having flexible arm contact means normally open, said control means also causing a separate electrically powered entrance light circuit switch to open or close, said light circuit switch having a switch operating arm spring biased toward a closed switch position, said control means comprising a pushable, sliding, manually operated plunger normally held in a first retracted position, said plunger having attached thereto a protuberant, air containing, compressible, manually exhaustible and self-expanding diaphragm, said diaphragm when in expanded condition holding said switch operating arm in the open switch position, said plunger when manually pushed to a second position being effective to close said flexible arm contact means of said bell circuit switch whereby said bell circuit is energized, and to compress and exhaust said diaphragm, said plunger allowing said flexible arm contact means to open and withdrawing said compressed diaphragm from contact with said light circuit switch operating arm as said plunger returns to the first retracted position when said manual pressure is discontinued, whereby said bell circuit switch is opened and said light circuit switch operating arm moves to a closed switch position and remains in said closed switch position until said diaphragm has self-expanded to its normally protuberant condition thereby moving said switch operating arm back to the open switch position.



2. The device as claimed in claim 1 further comprising a second pushable, slidable, manually operated plunger normally held in a first retracted position, said second plunger when manually pushed to a second position being effective to prevent the closing of said bell circuit switch contacts by said first plunger whereby the light circuit is energized without the energization of said bell circuit.


**References Cited** in the file of this patent

UNITED STATES PATENTS

| | | |
|---|---|---|
| 1,059,013 | Urquhart | Apr. 15, 1913 |
| 1,942,040 | Wolff | Jan. 2, 1934 |
| 2,866,862 | Bachi | Dec. 30, 1958 |
| 2,912,685 | Thomas | Nov. 10, 1959 |
| 2,921,162 | Craddock | Jan. 12, 1960 |

FOREIGN PATENTS

| | | |
|---|---|---|
| 697,151 | Great Britain | Sept. 16, 1953 |