US 20150280515A1

(19) **United States**

(12) **Patent Application Publication**

Ekstrom et al.

(10) **Pub. No.: US 2015/0280515 A1**

(43) **Pub. Date: Oct. 1, 2015**

(54) **INTEGRATED ELECTRONIC SWITCH AND CONTROL MODULE FOR A POWER TOOL**

(71) Applicant: **Black & Decker Inc.**, Newark, DE (US)

(72) Inventors: **Erik A. Ekstrom**, Woodstock, MD (US); **Matthew J. Velderman**, Baltimore, MD (US); **Redeat G. Alemu**, Cockeysville, MD (US); **Michael D. Grove**, Windsor, PA (US); **Alexandros T. Theos**, Bel Air, MD (US); **Alpay Hizal**, Elkridge, MD (US); **Victor A. Dorado Reyes**, White Marsh, MD (US)

(73) Assignee: **BLACK & DECKER INC.**, Newark, DE (US)

(21) Appl. No.: **14/672,617**

(22) Filed: **Mar. 30, 2015**

Related U.S. Application Data

(60) Provisional application No. 61/971,865, filed on Mar. 28, 2014.

Publication Classification

(51) **Int. Cl.**

H02K 7/14	(2006.01)
H05K 7/20	(2006.01)
B25B 21/02	(2006.01)
H02P 6/14	(2006.01)
H02K 9/06	(2006.01)
B25F 5/00	(2006.01)
H05K 5/00	(2006.01)
H05K 1/18	(2006.01)

(52) **U.S. Cl.**

CPC ***H02K 7/145*** (2013.01); ***H05K 5/0026*** (2013.01); ***H05K 7/2039*** (2013.01); ***H05K 7/20136*** (2013.01); ***H05K 1/181*** (2013.01); ***H02P 6/14*** (2013.01); ***H02K 9/06*** (2013.01); ***B25F 5/00*** (2013.01); ***B25B 21/02*** (2013.01); *H05K 2201/10053* (2013.01); *H05K 2201/10151* (2013.01)

(57) **ABSTRACT**

An electronic switch and control module for a power tool having an electric motor is provided. The module includes a module housing including a bottom surface, side walls, and an open face; a printed circuit board (PCB) fittingly received from the open face of the module housing and securely disposed within the module housing; an encapsulation member arranged to mate with a mating surface of the side walls of the module housing to form an enclosed compartment over a portion of the PCB to enclose at least one electronic or electro-mechanical element mounted on a surface of the PCB; and power switches mounted on the surface of the PCB within an open compartment of the module housing where the encapsulation member does not enclose the surface of the PCB, the power switches being electrically configured to switchably connect a supply of electric power from a power source to the electric motor.

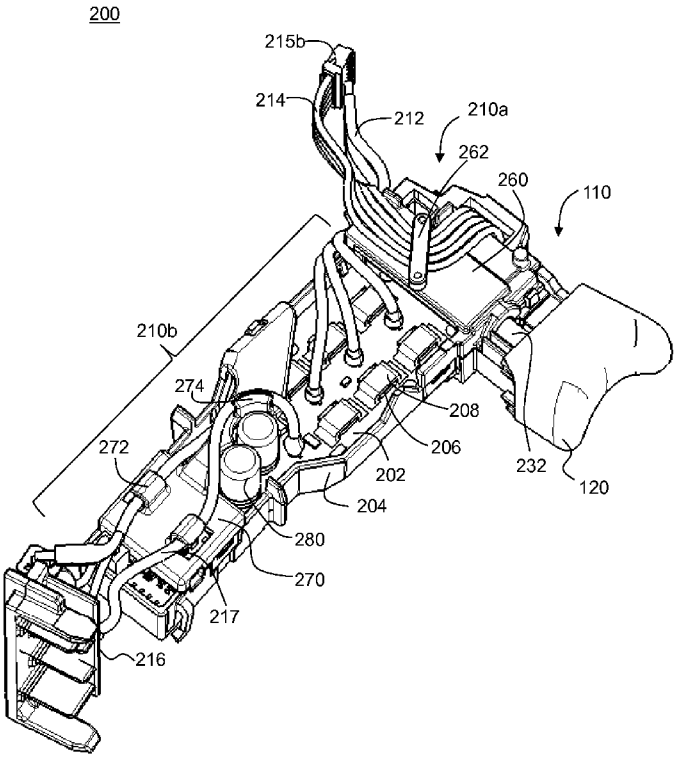

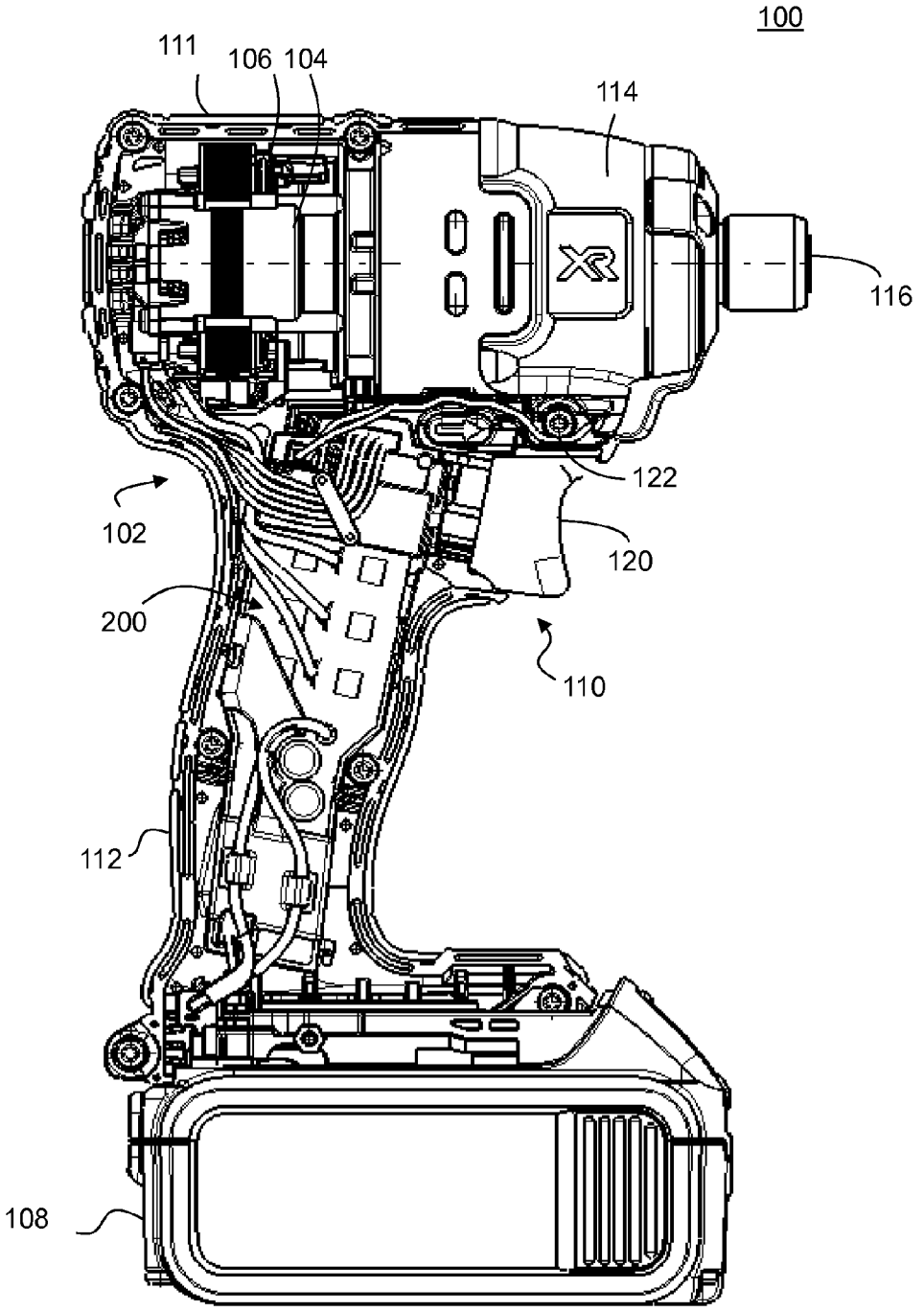

FIG. 1

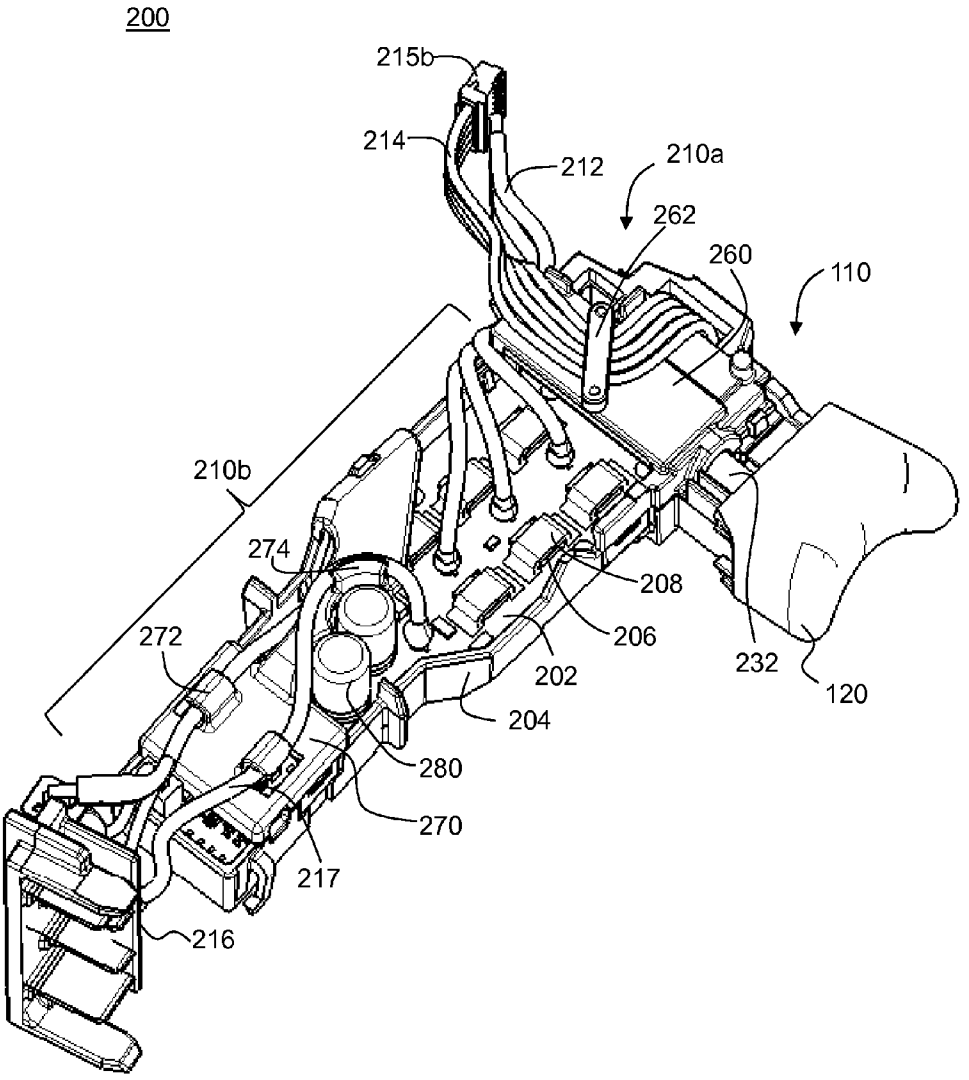
200
215b
214
212
210a
262
260
110
210b
274
208
272
206
232
202
120
204
280
270
217
216

FIG. 2A

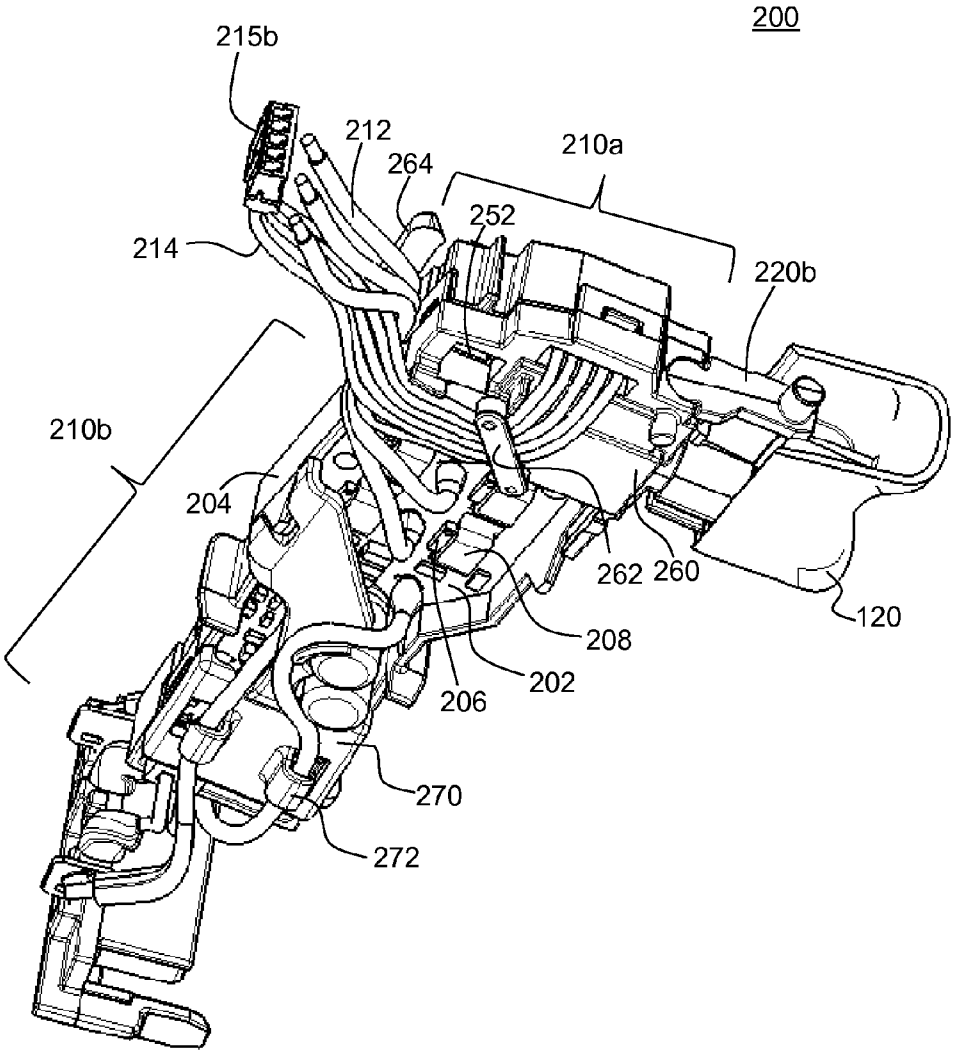
200
215b
212
264
210a
252
214
220b
210b
204
262
260
120
208
202
206
270
272

FIG. 2B

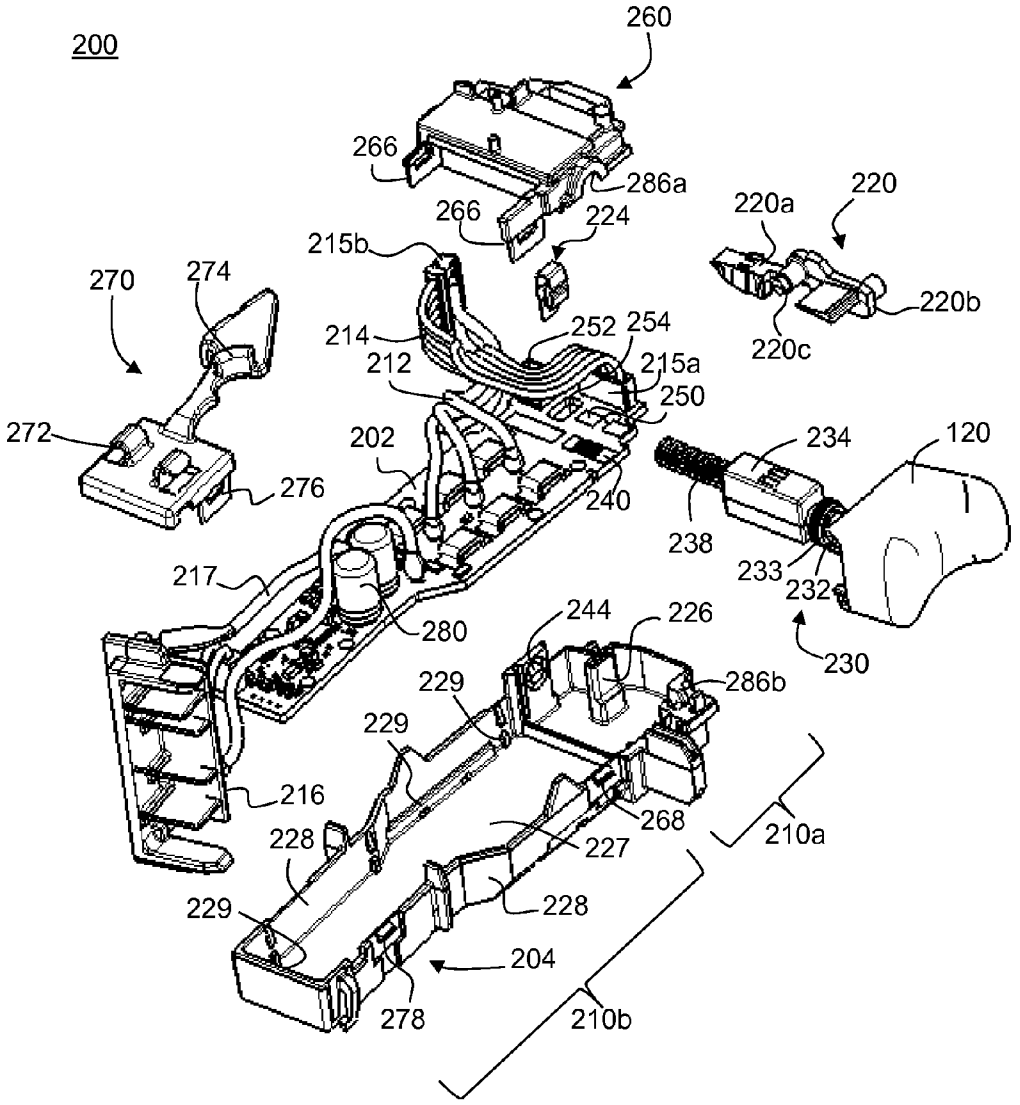
200
260
266
286a
266
224
215b
220a
220
220b
220c
270
274
214
252
254
212
215a
250
272
202
234
120
276
240
238
233
232
217
280
244
226
230
229
286b
229
216
268
210a
228
227
229
228
204
278
210b

FIG. 3A

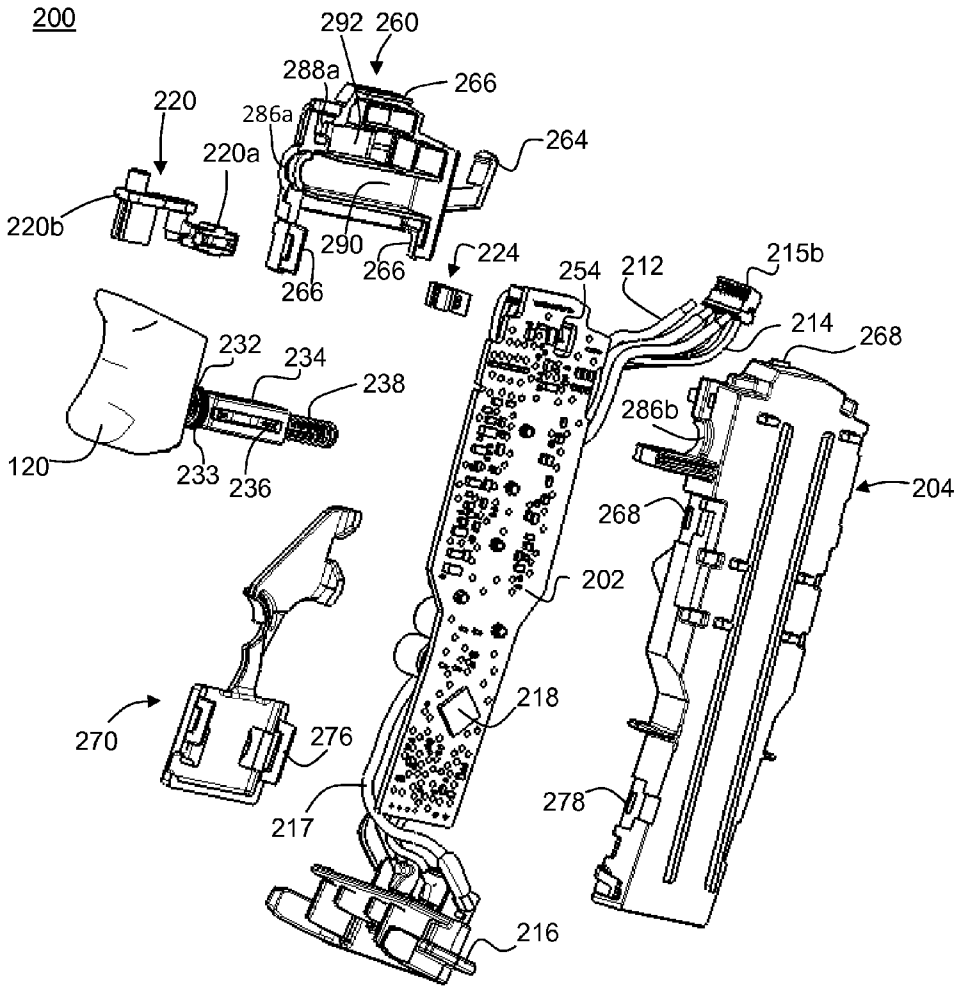
200
292
260
288a
266
220
286a
264
220a
220b
290
266
224
266
254
212
215b
214
268
232
234
238
286b
120
233
236
204
268
202
218
270
276
278
217
216

FIG. 3B

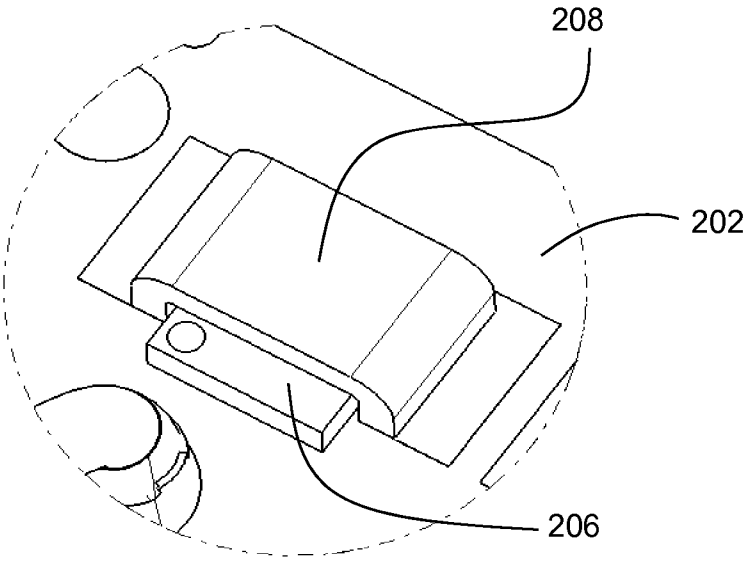

FIG. 4A

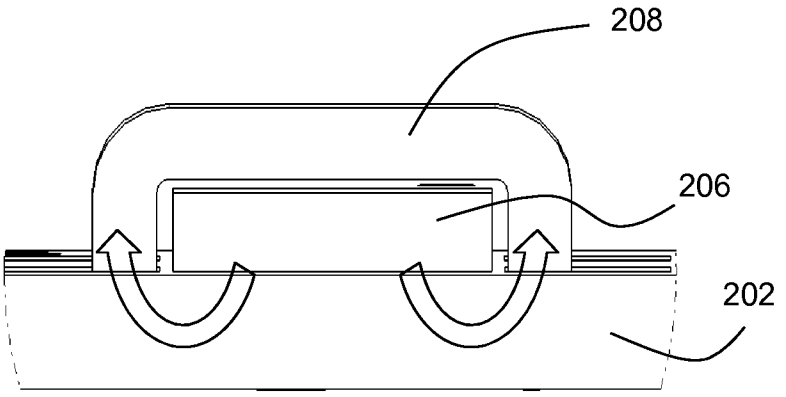

FIG. 4B

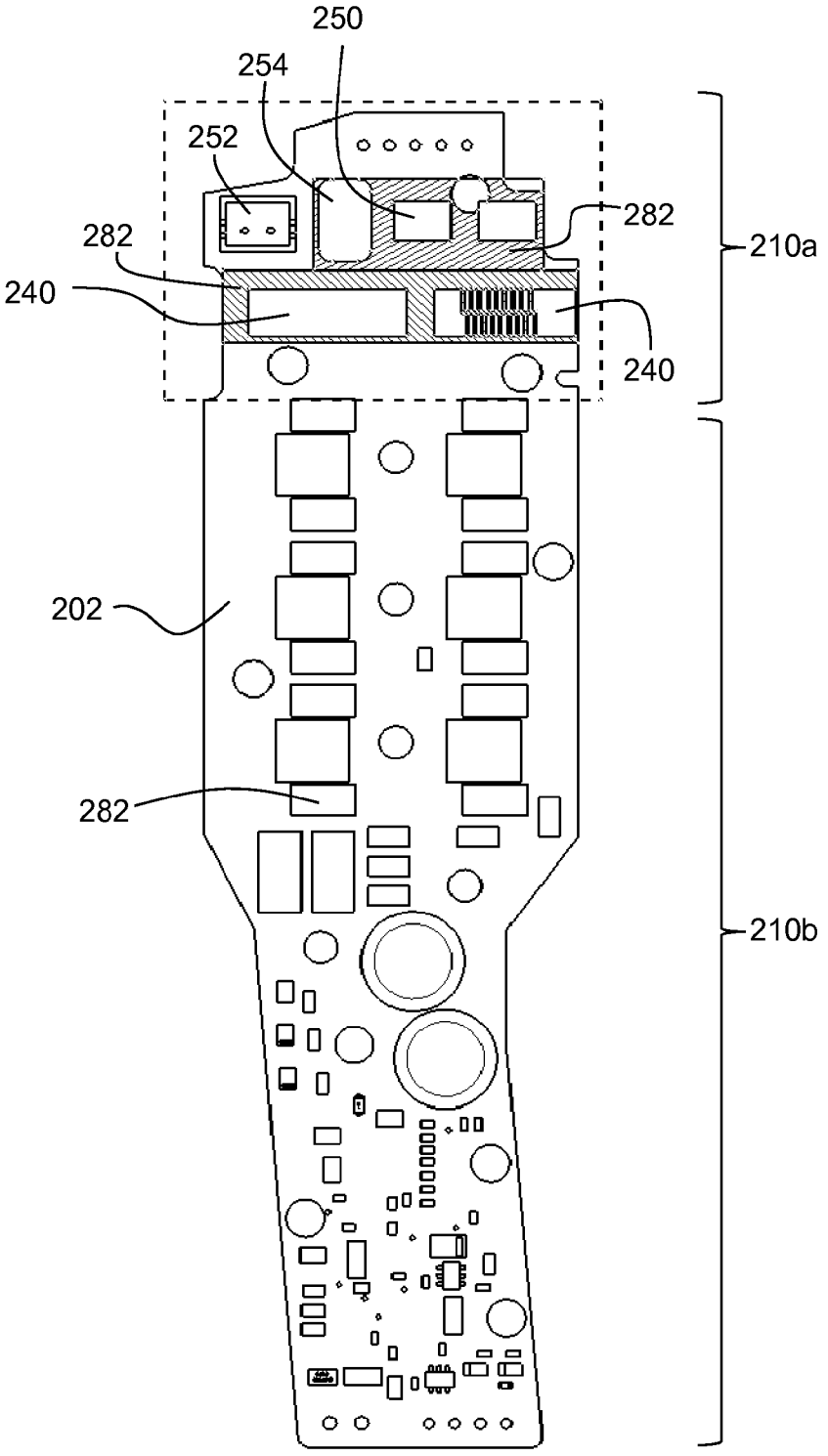

FIG. 5

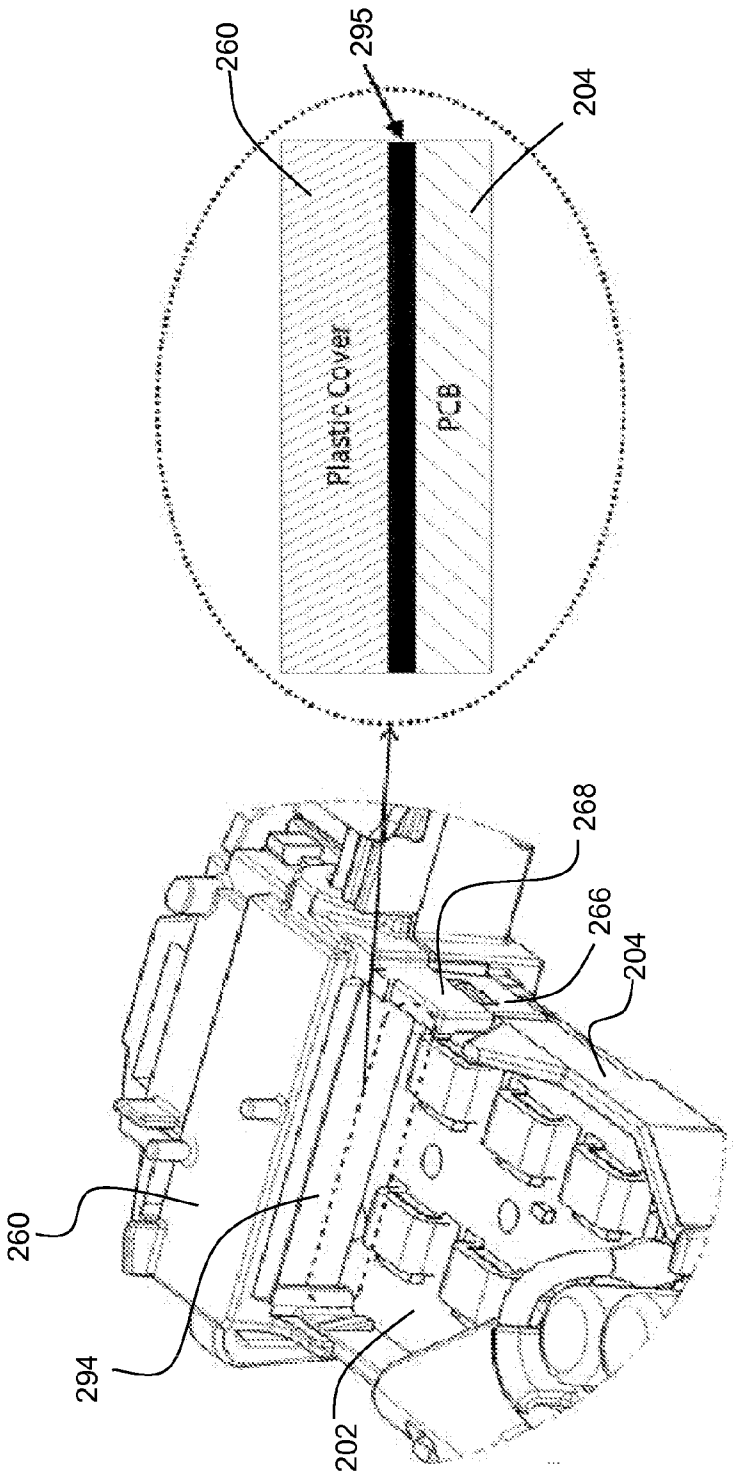

FIG. 6

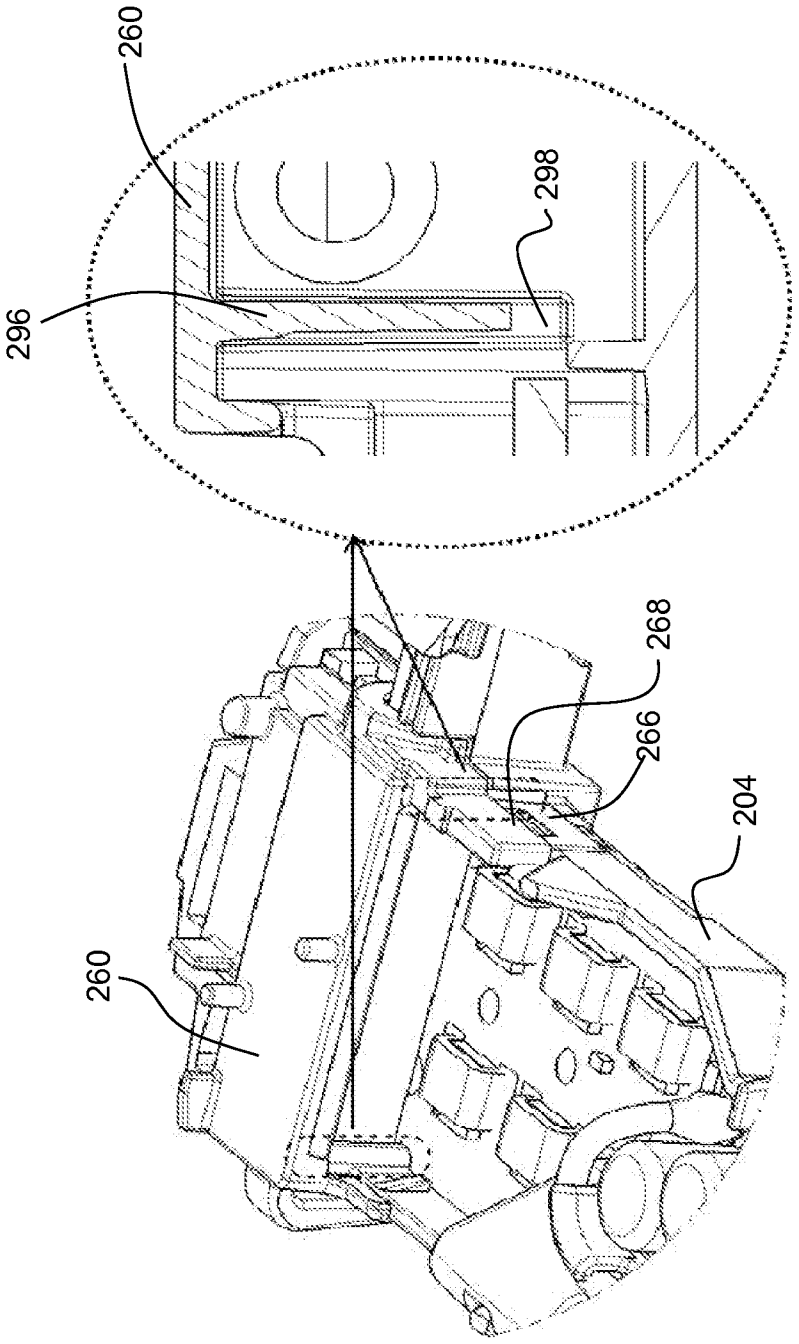

FIG. 7

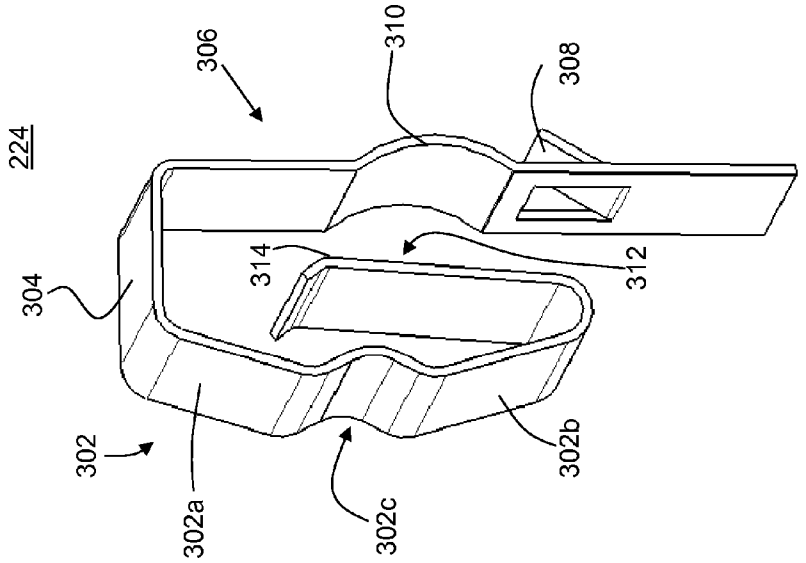
224
306
310
308
304
314
312
302
302a
302c
302b

FIG. 8B

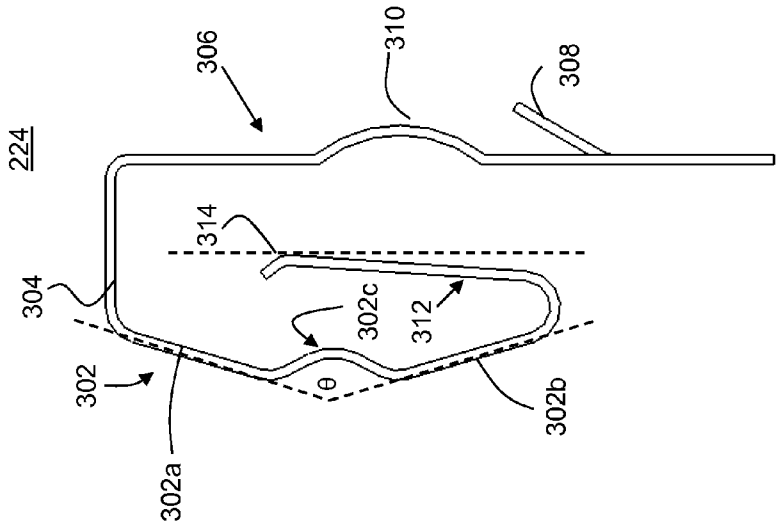
224
306
310
308
314
304
302c
312
θ
302
302a
302b

FIG. 8A

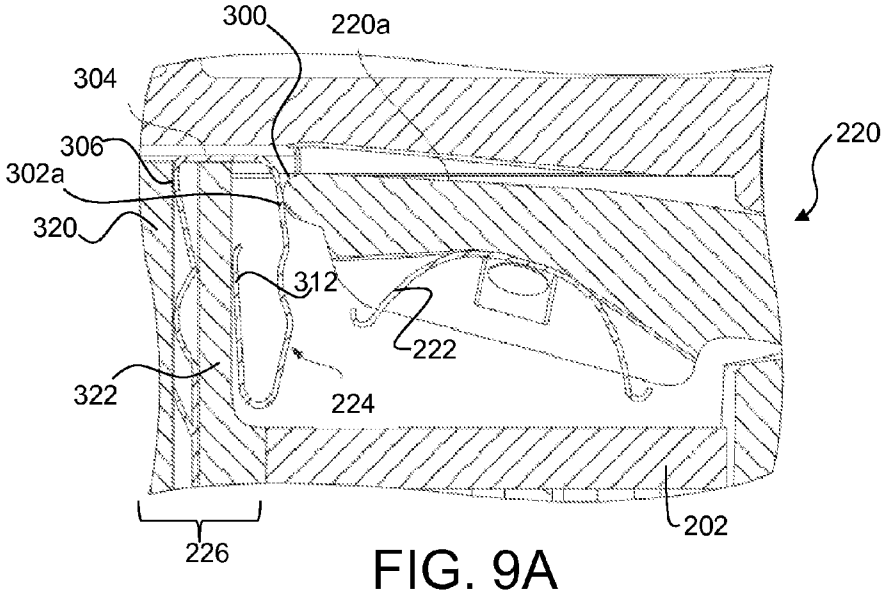
300
220a
304
306
302a
320
220
312
222
322
224
226
202

FIG. 9A

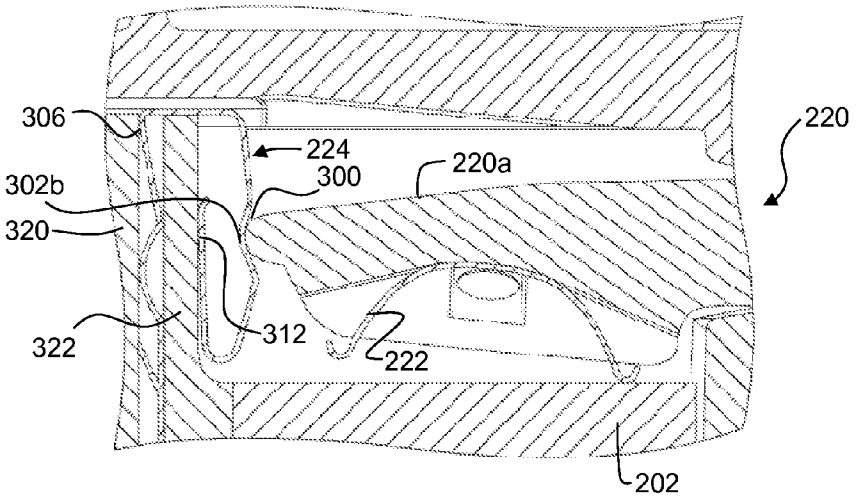
306
224
220
302b
300
220a
320
322
312
222
202

FIG. 9B

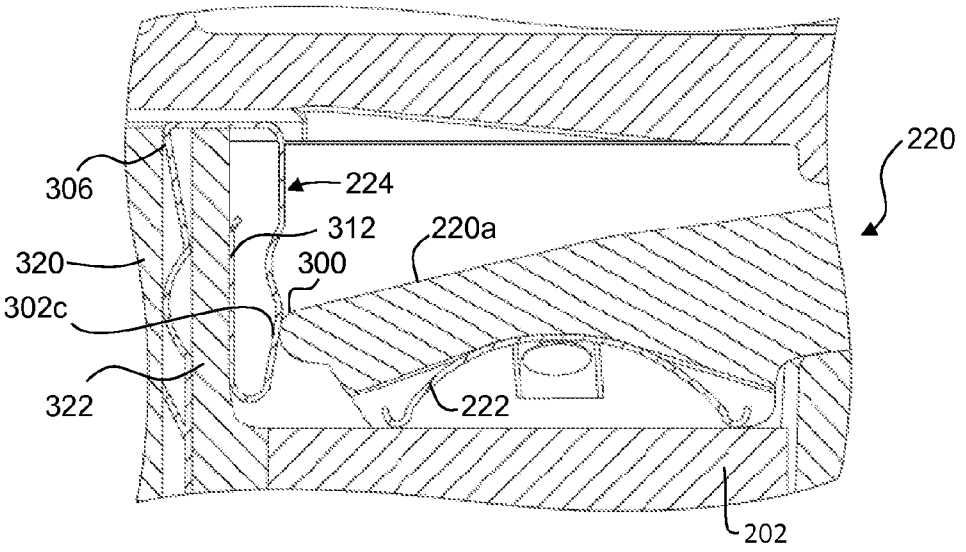

FIG. 9C

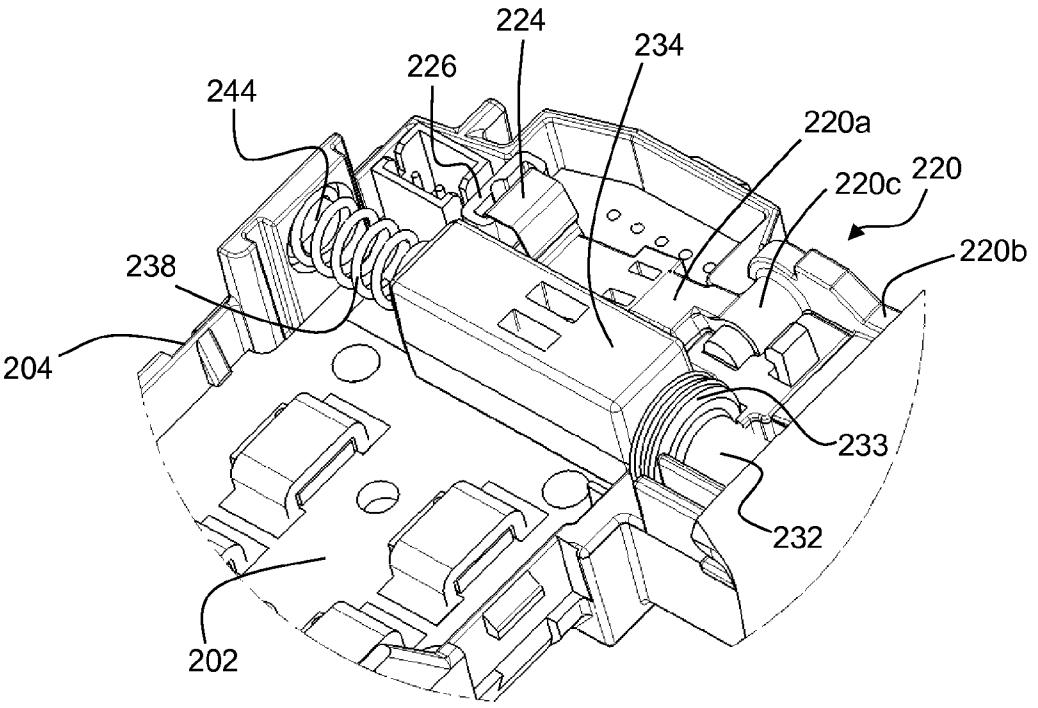

FIG. 10

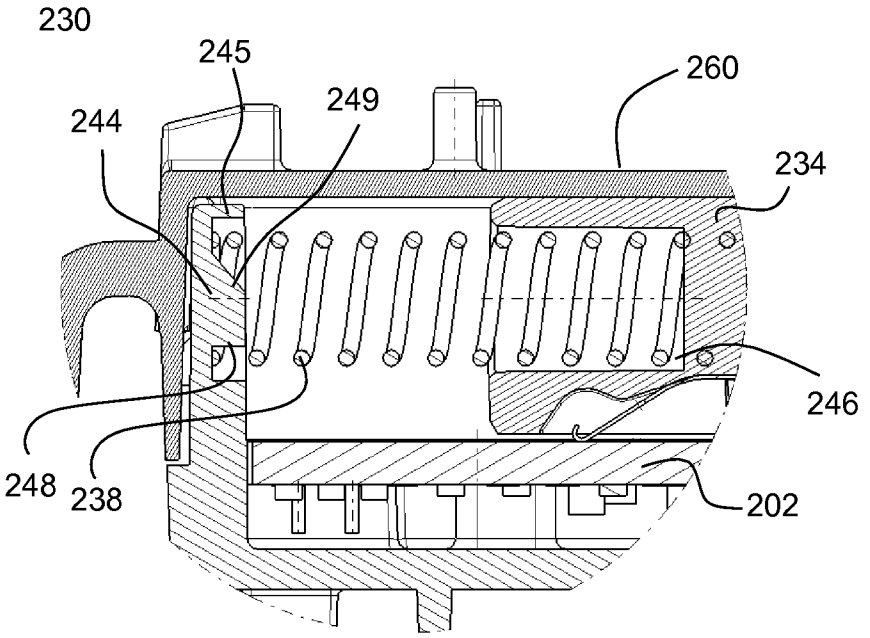

FIG. 11

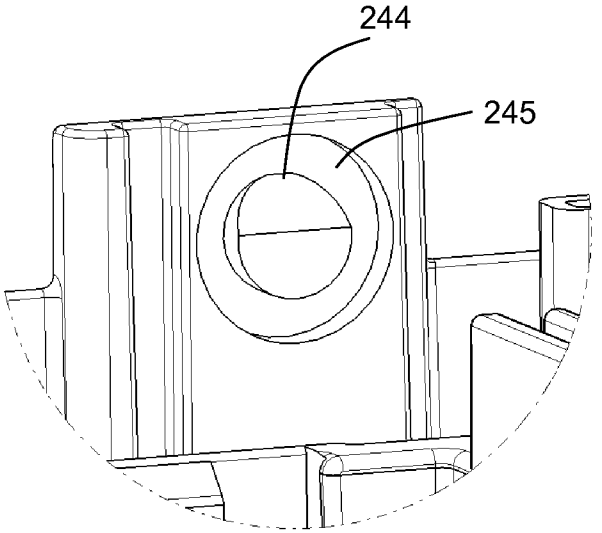

FIG. 12

INTEGRATED ELECTRONIC SWITCH AND CONTROL MODULE FOR A POWER TOOL

CROSS-REFERENCE TO RELATED APPLICATION

[0001] This application claims the benefit of U.S. Provisional Application No. 61/971,865 titled "Electronic Switch Module For A Power Tool" filed Mar. 28, 2014, content of which is incorporated herein by reference in its entirety.

BACKGROUND

[0002] Use of cordless power tools has increased dramatically in recent years. Cordless power tools provide the ease of a power assisted tool with the convenience of cordless operation. Conventionally, cordless tools have been driven by Permanent Magnet (PM) brushed motors that receive DC power from a battery assembly or converted AC power. In a PM brushed motor, commutation is achieved mechanically via a commutator and a brush system. By contrast, in a brushless DC motor, commutation is achieved electronically by controlling the flow of current to the stator windings. A brushless DC motor includes a rotor for providing rotational energy and a stator for supplying a magnetic field that drives the rotor. Comprising the rotor is a shaft supported by a bearing set on each end and encircled by a permanent magnet (PM) that generates a magnetic field. The stator core mounts around the rotor maintaining an air-gap at all points except for the bearing set interface. Included in the air-gap are sets of stator windings that are typically connected in either a three-phase wye or Delta configuration. Each of the windings is oriented such that it lies parallel to the rotor shaft. Power devices such as MOSFETs are connected in series with each winding to enable power to be selectively applied. When power is applied to a winding, the resulting current in the winding generates a magnetic field that couples to the rotor. The magnetic field associated with the PM in the rotor assembly attempts to align itself with the stator generated magnetic field resulting in rotational movement of the rotor. A control circuit sequentially activates the individual stator coils so that the PM attached to the rotor continuously chases the advancing magnetic field generated by the stator windings. A set of sense magnets coupled to the PMs in the rotor assembly are sensed by a sensor, such as a Hall Effect sensor, to identify the current position of the rotor assembly. Proper timing of the commutation sequence is maintained by monitoring sensors mounted on the rotor shaft or detecting magnetic field peaks or nulls associated with the PM.

[0003] Conventionally, power switches are provided within the power tool in close proximity to the motor or within the handle. Electronics including a controller for controlling the power devices are also provided within the handle or in the vicinity of the motor. A trigger switch assembly is also provided, preferable on the handle where it is easy for the user to engage. The controller is coupled to both the trigger assembly and the power devices and regulates the flow of power through the power devices based on the input from the trigger assembly. All the connectivity between these modules requires substantial wiring. Also, since the power devices generate a considerable amount of heat, they should be arranged within the power tool to transfer heat away from the power devices effectively.

SUMMARY

[0004] According to an aspect of the invention, an electronic switch and control module is provided for a power tool having an electric motor, comprising: a module housing including a bottom surface, side walls, and an open face; a printed circuit board (PCB) fittingly received from the open face of the module housing and securely disposed within the module housing; an encapsulation member arranged to mate with a mating surface of the side walls of the module housing to form an enclosed compartment over a portion of the PCB to enclose at least one electronic or electro-mechanical element mounted on a surface of the PCB; and a plurality of power switches mounted on the surface of the PCB within an open compartment of the module housing where the encapsulation member does not enclose the surface of the PCB, the power switches being electrically configured to switchably connect a supply of electric power from a power source to the electric motor.

[0005] In an embodiment, the electronic switch and control module further includes a controller mounted on the PCB and coupled to the input unit and the power switches, and the controller is configured to control the switching operation of the power switches based the signal from the input unit.

[0006] In an embodiment, the electronic switch and control module further includes a heat sink arranged to transfer heat away from the power switches.

[0007] In an embodiment, the electronic switch and control module further includes a plurality of heat sinks discretely mounted over a respective one of the plurality of power switches and secured to the surface of the PCB to transfer heat away from the power switches.

[0008] In an embodiment, the electronic switch and control module further includes an input unit having at least one electro-mechanical element at least partially disposed within the enclosed component and generating a signal for controlling a switching operation of the plurality of power switches.

[0009] In a further embodiment, the electro-mechanical element of the input unit includes a speed-sensing member on the surface of the PCB and a variable-speed actuator having a sliding member in sliding contact with the speed-sensing member, where the speed-sensing member and the sliding member are disposed and substantially enclosed within the enclosed compartment, and the speed-sensing member generates the signal for controlling a switching operation of the plurality of power switches based on a sliding position of the sliding member. In an embodiment, the variable-speed actuator further includes a variable-speed trigger disposed outside the module housing and a link slidably extending from the variable-speed through an aperture in the module housing into the enclosed compartment and coupled to the sliding member.

[0010] In an further or alternative embodiment, the electro-mechanical element of the input unit includes a contact-sensing member on the surface of the PCB and a forward/reverse actuator having a contact member in selective contact with the contact-sensing member, where the contact-sensing member and the contact member are disposed and substantially enclosed within the enclosed compartment, and the contact-sensing member generates the signal for controlling a rotational direction of the motor. In an embodiment, the forward/reverse actuator further includes a pivot member supported by the module housing and an engagement member extending outside the module housing from the pivot member, the pivot member pivotably linking the contact member and the engagement member.

[0011] In an embodiment, the encapsulation member includes a wall arranged to rest on the surface of the PCB, and a lower end of the wall is sealed to the surface of the PCB.

[0012] In an embodiment, the encapsulation member includes at least one of wire retention or wire guide features arranged to retain or guide wires coupled to the PCB.

[0013] In an embodiment, the electronic switch and control module further includes a conformal coating applied on the surface of the PCB associated with the open compartment but not on at least a part of the surface of the PCB associated with the enclosed compartment. In a further embodiment, the encapsulation member includes a wall arranged to rest on the surface of the PCB, and a lower end of the wall is sealed to the surface of the PCB via the conformal coating.

[0014] In an embodiment, the encapsulation member and the module housing include mating features for securely mounting the encapsulation member on the module housing. In a further embodiment, the mating features include a tongue provided on one of the encapsulation member or the module housing and a corresponding groove provided on the other of the encapsulation member or the module housing to form a seal between the encapsulation member and the module housing.

[0015] In an embodiment, an electric power tool is provided having an electric motor and an electronic switch and control module as described above. In an embodiment, the electric motor is a three-phase brushless DC motor and the power switches include six Field Effect Transistors connected as a three-phase bridge rectifier. In an embodiment, the electric motor is rotatably coupled to a fan inside a motor housing, and the electric power module is disposed in a tool handle in fluid communication with the motor such that an airflow is generated by the fan through the handle to transfer heat away from the power switches within the open compartment. In an embodiment, the power tool is a drill or an impact driver. In an embodiment, the power tool includes a variable speed trigger or a forward/reverse button engaging the input unit.

[0016] According to another aspect of the invention, an electronic switch and control module for a power tool having an electric motor, comprising: a printed circuit board (PCB); an encapsulation member forming an enclosed compartment enclosing a portion of a surface of the PCB; a plurality of power switches mounted on the surface of the PCB outside the enclosed compartment, the power switches being electrically configured to switchably connect a supply of electric power from a power source to the electric motor; and an input unit having at least one electro-mechanical element at least partially disposed within the enclosed component and generating a signal for controlling a switching operation of the plurality of power switches.

[0017] In an embodiment, the electronic switch and control module includes a controller mounted on the PCB and coupled to the input unit and the plurality of power switches, and the controller is configured to control the switching operation of the power switches based the signal from the input unit. In an embodiment, the controller is mounted on a back surface of the PCB.

[0018] In an embodiment, the electronic switch and control module includes a heat sink arranged to transfer heat away from the power switches. In an alternative embodiment, the electronic switch and control module includes a plurality of heat sinks discretely mounted over a respective one of the plurality of power switches and secured to the surface of the PCB to transfer heat away from the power switches.

[0019] In an embodiment, the electro-mechanical element of the input unit includes a speed-sensing member on the surface of the PCB and a variable-speed actuator having a sliding member in sliding contact with the speed-sensing member, where the speed-sensing member and the sliding member are disposed and substantially enclosed within the enclosed compartment, and the speed-sensing member generates the signal for controlling a switching operation of the plurality of power switches based on a sliding position of the sliding member. In an embodiment, the variable-speed actuator further includes a variable-speed trigger disposed outside the enclosed compartment and a link slidably extending from the variable-speed through an aperture in the enclosed compartment into the enclosed compartment and coupled to the sliding member. In an embodiment, the speed-sensing member includes a series of conductive tracks on the surface of the PCB and the variable-speed actuator includes a conductive wiper in sliding contact with the conductive tracks. In an embodiment, the encapsulation member includes an axial chamber facilitating a sliding movement of the sliding member and restraining a lateral movement of sliding member away from the PCB.

[0020] In an embodiment, the electro-mechanical element of the input unit includes a contact-sensing member on the surface of the PCB and a forward/reverse actuator having a contact member in selective contact with the contact-sensing member, where the contact-sensing member and the contact member are disposed and substantially enclosed within the enclosed compartment, and the contact-sensing member generates the signal for controlling a rotational direction of the motor. In an embodiment, the forward/reverse actuator further includes a pivot member supported by the enclosed compartment and an engagement member extending outside the enclosed compartment from the pivot member, the pivot member pivotably linking the contact member and the engagement member. In an embodiment, the contact-sensing member comprises a pair of conductive tracks on the surface of the PCB and the contact member includes an electrical connector that selectively comes into contact with none, one, or both of the conductive tracks. In an embodiment, the encapsulation member includes a chamber facilitating a pivoting movement of the sliding member towards and away from the PCB.

[0021] In an embodiment, the electronic switch and control module further includes a module housing substantially encapsulating sides and a lower surface of the PCB. In an embodiment, the encapsulation member mates with a mating surface of the module housing to enclose the surface of the PCB within the enclosed compartment.

[0022] In an embodiment, an electric power tool is provided having an electric motor and an electronic switch and control module as described above. In an embodiment, the electric motor is a three-phase brushless DC motor and the power switches include six Field Effect Transistors connected as a three-phase bridge rectifier. In an embodiment, the electric motor is rotatably coupled to a fan inside a motor housing, and the electric power module is disposed in a tool handle in fluid communication with the motor such that an airflow is generated by the fan through the handle to transfer heat away from the power switches outside the closed compartment. In an embodiment, the power tool is a drill or an impact driver. In an embodiment, the power tool includes a variable speed trigger or a forward/reverse button engaging the input unit.

[0023] According to another aspect of the invention, an electronic switch and control module for a power tool having an electric motor is provided, comprising: a module housing including a bottom surface, side walls, and an open face; a printed circuit board (PCB) received from the open face of the module housing and securely disposed within the module housing at a distance from the bottom surface of the module housing; a plurality of power switches mounted on a top surface of the PCB, the power switches being electrically configured to switchably connect a supply of electric power from a power source to the electric motor; a plurality of heat sinks discretely arranged and each mounted over a respective one of the plurality of power switches and secured to the top surface of the PCB to transfer heat away from the power switch through the open face of the module housing; an input unit having a plurality of conductive tracks disposed on the PCB and an electro-mechanical element engaging the plurality of conductive tracks, the input unit generating a signal for controlling a switching operation of the plurality of power switches; and a controller mounted on the PCB coupled to the plurality of power switches and the input unit, where the controller is configured to control the switching operation of the power switches based the signal from the input unit.

[0024] In an embodiment, the conductive tracks are disposed on the top surface of the PCB.

[0025] In an embodiment, the controller is mounted on a lower surface of the PCB facing the bottom surface of the module housing, the controller being electronically connected to the power switches via a plurality of vias.

[0026] In an embodiment, the module housing includes retention features for securely holding the PCB at a distance from the bottom surface of the module housing.

[0027] In an embodiment, each heat sink includes a main plate disposed directly above the respective power switch at close proximity thereto, and at least one leg mounted on the PCB and electronically coupled to a drain of the respective power switch.

[0028] In an embodiment, the power switches are six Field Effect Transistors (FETs) configured as a three-phase bridge rectifier.

[0029] In an embodiment, the electronic switch and control module further includes a potting compound formed around the PCB within the housing but leaves a top surface of the heat sink exposed through the open face of the module housing. In an embodiment, the potting compound leaves exposed a main plate of the heat sink with a surface area of approximately between 20 to 30 mm^2.

[0030] In an embodiment, the electronic switch and control module includes an encapsulation member that substantially covers the input unit and includes a chamber housing the electro-mechanical element in engagement with the conductive tracks. In an embodiment, the encapsulation member mates with at least one of the side walls of the module housing and includes at least one of wire retention or wire guide features arranged to retain or guide wires coupled to the PCB.

[0031] In an embodiment, the electronic switch and control module includes a cover configured to mate with at least one of the side walls of the module housing to partially cover a portion of the PCB not including an area of the PCB where the plurality of power switches and plurality of heat sinks are mounted. In an embodiment, the cover includes at least one of wire retention or wire guide features arranged to retain or guide wires coupled to the PCB.

[0032] In an embodiment, an electric power tool is provided having an electric motor and an electronic switch and control module as described above. In an embodiment, the electric motor is a three-phase brushless DC motor and the power switches include six Field Effect Transistors connected as a three-phase bridge rectifier. In an embodiment, the electric motor is rotatably coupled to a fan inside a motor housing, and the electric power module is disposed in a tool handle in fluid communication with the motor such that an airflow is generated by the fan through the handle to transfer heat away from the power switches within the open compartment.

BRIEF DESCRIPTION OF THE DRAWINGS

[0033] Example embodiments of the present invention will become more fully understood from the detailed description given herein below and the accompanying drawings, wherein like elements are represented by like reference numerals, which are given by way of illustration only and thus are not limitative of the example embodiments of the present invention.

[0034] FIG. **1** depicts a longitudinal cross-sectional view of a power tool with a housing half removed, according to an embodiment;

[0035] FIGS. **2**A and **2**B depict perspective views of an electronic control module from two different angles, according to an embodiment;

[0036] FIGS. **3**A and **3**B respectively depict expanded front and back perspective views of the electronic control module, according to an embodiment;

[0037] FIGS. **4**A and **4**B respectively depict a zoomed-in perspective view and a cross-sectional view of a the electronic control module showing the arrangement of a power switch and a heat sink on a printed circuit board (PCB), according to an embodiment;

[0038] FIG. **5** depicts a top view of the PCB alone without any mounted components, according to an embodiment;

[0039] FIG. **6** depicts a partial perspective view of the electronic control module showing an encapsulation member sealed over the PCB, according to an embodiment;

[0040] FIG. **7** depicts a partial perspective view of the electronic control module showing mating features for mounting the encapsulation member to the control module housing, according to an embodiment;

[0041] FIGS. **8**A and **8**B depict side and perspective views of a biasing member (forward/reverse spring), according to an embodiment;

[0042] FIGS. **9**A-**9**C depict cross-sectional views of a forward/reverse actuator relative to the biasing member in forward, locked, and reverse positions, respectively, according to an embodiment;

[0043] FIG. **10** depicts a partial perspective view of the electronic control module without the encapsulation member, according to an embodiment;

[0044] FIG. **11** depicts a cross-sectional view of the variable-speed actuator within the enclosed compartment, according to an embodiment; and

[0045] FIG. **12** depicts a zoomed-in view of a post for the variable-speed compression spring, according to an embodiment.

DESCRIPTION

[0046] With reference to the FIG. **1**, a power tool **100** constructed in accordance with the teachings of the present dis-

closure is illustrated in a longitudinal cross-section view. Power tool **100** in the particular example provided may be a hand held impact driver, but it will be appreciated that the teachings of this disclosure is merely exemplary and the power tool of this invention could be any power tool. The power tool shown in FIG. **1** may include a housing **102**, an electric motor **104**, a battery pack **108**, a transmission assembly (gear case) **114**, and an output spindle **116**. The gear case **114** may be removably coupled to the housing **102**. The housing **102** can define a motor housing **111** and a handle **112**.

[0047] According to an embodiment, motor **104** is received in motor housing **111**. Motor **104** maybe be any type of motor and may be powered by an appropriate power source (electricity, pneumatic power, hydraulic power). In an embodiment, the motor is a brushless DC electric motor and is powered by a battery pack **108**.

[0048] According to an embodiment of the invention, power tool **100** further includes an integrated electronic switch and control module **200** (hereinafter referred to as "electronic control module", or "control module"). Electronic control module **200**, in an embodiment, may include a controller and electronic switching components for regulating the supply of power from the battery pack **108** to motor **105**. In an embodiment, electronic control module **200** is disposed within the handle **112** below the motor housing **111**, though it must be understood that depend on the power tool shape and specifications, electronic control module **200** may be disposed at any location within the power tool. Electronic control module may also integrally include components to support a user-actuated input unit **110** (hereinafter referred to as "input unit" **110**) for receiving user functions, such as an on/off signal, variable-speed signal, and forward-reverse signal. In an embodiment, input unit **100** may include a variable-speed trigger **120**, although other input mechanism such as a touch-sensor, a capacitive-sensor, a speed dial, etc. may also be utilized. In an embodiment, an on/off signal is generated upon initial actuation of the variable-speed trigger **120**. In an embodiment, a forward/reverse button **122** is additionally provided on the tool **100**. The forward/reverse button **122** may be pressed on either side of the tool in a forward, locked, or reverse position. In an embodiment, the associated circuitry and components of the input unit **110** that support the variable-speed trigger **120** and the forward/reverse button **122** may be fully or at least partially integrated into the electronic control module **200**. Based on the input signals from the input unit **110** and associated components, the controller and electronic switching components of the electronic control module **200** modulate and regulate the supply of power from the battery pack **108** to motor **105**. Details of the electronic control module **200** are discussed later in detail.

[0049] While in this embodiment, the power source is battery pack **108**, it is envisioned that the teachings of this disclosures may be applied to a power tool with an AC power source. Such a power tool may include, for example, a rectifier circuit coupled to the AC power source.

[0050] It must be understood that, while FIG. **1** illustrates a power tool impact driver having a brushless motor, the teachings of this disclosure may be used in any power tool, including, but not limited to, drills, saws, nailers, fasteners, impact wrenches, grinders, sanders, cutters, etc. Also, teachings of this disclosure may be used in any other type of tool or product that include a rotary electric motor, including, but not limited to, mowers, string trimmers, vacuums, blowers, sweepers, edgers, etc.

[0051] The electronic control module **200** is described herein, according to an embodiment of the invention. FIGS. **2**A and **2**B depict perspective views of electronic control module **200** from two different angles, according to an embodiment. FIGS. **3**A and **3**B depict exploded front and back views of the same module **200**, according to an embodiment. Reference is made to these drawings herein.

[0052] Electronic control module **200**, in an embodiment, includes a printed circuit board (PCB) **202** arranged and mounted inside a module housing **204**. Module housing **204** includes a bottom surface **227**, side walls **228**, and an open face. PCB **202** is inserted through the open face and secured inside the module housing **204**. Side walls **228** include retention features **229** for securely holding the PCB **202** at a distance from the bottom surface **227**. Control module **200** includes two compartments—an enclosed compartment **210***a* that houses and encloses a first part of the PCB **202** and components associated with the input unit **110**, as described below, and an open compartment **210***b*, and partially encloses a second part of the PCB **202**. Within the open compartment **210***b*, module housing **204** encloses the lower surface and the sides of PCB **202**, but leaves the upper surface of the PCB **202** substantially exposed. Mounted on the upper surface of PCB **202** are a series of power switches **206** and a series of heat sinks disposed over the power switches **206** and secured to the PCB **202**. As discussed below in detail, this arrangement allows cooling air to transfer heat away from the heat sinks **208** within the power tool **100**, but protects the input unit **110** components from any dust and debris from the cooling air.

[0053] According to an embodiment, control module **200** includes a controller **218**. In an embodiment, the controller may be mounted to a lower surface of the PCB **202** and be in electronic communication with the rest of the PCB **202** components through vias (not shown). In an embodiment, controller **218** may be a programmable micro-controller, microprocessor, or other processing unit capable of controlling the motor and various aspects of power tool. For example, controller **218** may be programmed to turn on and off power switches **206**, as discussed below, to control commutation of the brushless motor. In an embodiment, controller **218** may be coupled to a series of gate drivers disposed on the PCB **202**, which in turn are connected to the gates of the power switches **206**. Alternatively, controller **218** may be a circuit chip that includes both a micro-controller and the gate drivers and be coupled directly to the gates of the power switches **206**. Using the gate drivers, controller **218** turns the power switches **206** on or off selectively to commutate the motor and control the speed of the motor. Additionally, the controller may be programmed to various tool and battery pack operation features, such as tool and/or temperature control, battery pack voltage control, and tool over-current detection and control, etc. In an alternative embodiment, the controller may be an Application Specific Integrated Circuit (ASIC) configured to control the aforementioned aspects of the motor, battery, and power tool.

[0054] In an exemplary embodiment, power switches **206** may be Field Effect Transistors (FETs). In an embodiment, six power switches **206**, including three high-side power switches and three low-side power switches, are arranged and coupled together as a three-phase bridge rectifier circuit. Using the gate drivers, controller **218** sequentially turns the power switches **206** on and off within each phase of the brush motor **104** commutation. Further, the controller **218** performs pulse-width modulation (PWM) of the power switches **206** within each phase to regulate the speed of the motor based on

speed signals received from input unit **110**, as described below. Controller **218** further controls the direction of motor commutation based on a forward/reverse signal received from input unit **110**, also discussed below.

[0055] It is noted that while the power switches **206** discussed herein are FETs, other types of power switches such as BJTs or IGBTs may be utilized. Additionally, while power switches **206** are arranged as a three-phase bridge rectifier for driving a three-phase brushless motor, other number and arrangement of power switches may be used to drive other types of motors, including brushed or brushless motors.

[0056] As described above, module housing **204** leaves the upper surface of the PCB **202** exposed, thus allowing heat to dissipate from the heat sinks **208**. Electronic control module **200** may be placed within a path of air flow inside the power tool, e.g., inside the power tool handle **112** in fluid communication with motor fan **106** so that airflow generated by motor fan **106** runs through the handle **112**. The air flow generated within the handle further improves heat dissipation from the electronic control module **200**.

[0057] In an embodiment, the PCB **202** is further potted with a layer of potting compound (not shown) in the open compartment **210***b*. The layer of potting compound, in an embodiment, substantially covers most of the circuit components on the PCB, but leave a top plate of heat sinks **206** exposed so the heat sinks **208** can dissipate heat away from the power switches **206**. While the potting compound is not shown in FIGS. **2**A-**3**B, the control module of FIG. **1** is shows with the potting compound disposed inside the housing **202**.

[0058] FIGS. **4**A and **4**B depict zoomed-in perspective and cross-sectional views of PCB **202**, showing the arrangement of heat sink **208** and power switch **206** (in this case a FET) mounted over PCB **202**, according to an embodiment. Heat sink **208** includes two legs mounted on the PCB **202**. The main plate of heat sink **208** is located directly above power switch **206** at close proximity thereto. This allows heat to be transferred directly from power switch **206** to the heat sink **208** through a small air gap between the two. In an embodiment, the main plate of the heat sink **208** has a surface area of 10 to 40 mm^2, preferably 15-35 mm^2, more preferably 20-30 mm^2, that is exposed after the potting compound is applied. In addition, one or more of the legs of the heat sink **208** is electrically connected to the drain of power switch **206** on the PCB **202**. This arrangement further improves heat transfer from the FET **206** to the heat sink **208**.

[0059] It is noted that while in this embodiment discrete heat sinks **208** are mounted on respective power switches **206**, a lower number of heat sinks **208** may be utilized instead. In an alternative embodiment of the invention, a single heat sink is mounted on the PCB over the power switches **206** to provide a higher surface area for heat transfer.

[0060] Referring back to FIGS. **2**A through **3**B, in an embodiment, a series of output wires **212** are secured on one end to a surface of the PCB **202**. These wires connect the outputs of the power switches three-phase bridge rectifier to the power terminals the brushless motor **104**. In an embodiment, a series of control signal wires **214** are also secured to a wire receptacle **215***a*. In an embodiment, wire receptacle **215***a* is mounted on the PCB and is in electrical communication with the controller **218**. The control signal wires **214** allow the controller **218** to communicate with other parts of the power tool **100**, such as the motor **104** and the battery **108**. In an embodiment, hall signals from the brushless motor hall sensors communicate with the controller **218** through these control signal wires **214**. Control signal wires **214** may additionally be provided with a control terminal **215***b* to ease plug-in connectivity of external wires with the control signal wires **214**. In an embodiment, a pair of power input wires **217** are also secured on the surface of PCB **202**. These wires are coupled to a power source (e.g., battery **108**) via a power terminal **216** to supply power from the power source to the power switches **206**.

[0061] In an embodiment, control module **200** includes an encapsulation member **260** that mates with the module housing **204** to form the enclosed compartment **210***a* of control module **200**. As discussed below in detail, encapsulation member **260** protects components associated with input unit **110** from dust and debris. Encapsulation member **260** also includes wire retaining features **262** and wire guide features **264** for retaining and positioning signal wires **214** and/or power output wires **212** away from the housing **204**. Encapsulation member **260** further includes mating features **266** that mate with corresponding mating features **268** on the module housing **204**. In an embodiment, the mating features **268** include lips that snap fit into slots in mating features **266**. In an embodiment, encapsulation member **260** further includes an opening **269** that allows control signal wires **214** to connect to PCB-side control terminal **215***a*.

[0062] Additionally, in an embodiment, control module **200** includes an additional cover **270** that covers a lower portion of PCB **202**. Cover **270** also includes wire retaining features **272** for retaining the power wires **217**, as well as wire guide features **274** for guiding the wires **217** around circuit components (e.g., capacitors **280**) mounted on PCB **202**. Cover **270** further includes mating features **276** that mate with corresponding mating features **278** on the module housing **204**. In an embodiment, the mating features **278** include lips that snap-fit into slots in mating features **276**.

[0063] In an embodiment, control module **200** is additionally provided with an auxiliary control terminal **252** mounted on a top portion of the PCB **202** that allows the controller **218** with other motor or tool components. In an embodiment, auxiliary control terminal **252** allows the controller **218** to communicate with an LED provided on the tool **100**. In an embodiment, auxiliary control terminal **252** is provided outside and adjacent to the enclosed compartment **210***a*.

[0064] The input unit **110** is discussed herein, according to an embodiment of the invention. According to an embodiment, input unit **110** is at least partially integrated into control module **200**. In an embodiment, input unit **110** incorporates electro-mechanical elements for variable-speed detection, on/off detection, and forward/reverse detection inside the enclosed compartment **210***a* of control module **200**, as discussed herein.

[0065] In an embodiment, input unit **110** includes a forward/reverse actuator **220** supported by the enclosed compartment **210***a* portion of the module housing **204**. In an embodiment, forward/reverse actuator **220** includes a contact member **220***a*, which holds an electrical connector **222** and is disposed inside the enclosed compartment **210***a* of the module housing **204**, and an engagement member **220***b*, which is located outside the module housing **204**. In an embodiment, engagement member **220***b* is in moving contact with forward/reverse button **122** on the power tool **100**. A pivot member **220***c* located between the contact member **220***a* and engagement member **220***b* is supported by the module housing **204** and provides a pivot point for the forward/reverse actuator. A biasing member **224** is secured to the module housing **204** to

engage and bias the contact member **220***a* in a forward, neutral (e.g., locked), or reverse direction. In an embodiment, biasing member **224** is secured in an opening of a holder, i.e. a post **226** that projects from the bottom surface **227** of the module housing **204** within the enclosed compartment **210***a*. In an embodiment, PCB **202** is provided with a through-hole **254** that receives the post **226**. When the user presses the forward/reverse button **122** from either side of the tool to a forward, locked, or reverse position, the forward/reverse button **122** moves the engagement member **220** around the pivot portion **220***c*. Pivoting movement of the engagement member **220***b* around the pivot portion **220***c* causes the electrical connector **222** of contact member **220***a* to make or break contact with a contact-sensing member against the biasing force of the biasing member **224**. In an embodiment, contact sense member includes a pair of conductive tracks **250** arranged on PCB **202**.

[0066] In an embodiment, one of the conductive tracks **250** is electrically connected to power source **108** and the other is connected to and sensed by controller **218**. Voltage is present and sensed by the controller **218** when electrical connector **222** makes contact with the pair of conductive tracks **250**, thus electrically connecting the two conductive tracks **250**. Presence or lack of sensed voltage is indicative of whether the motor should rotate in the forward or reverse direction. Functional details of use and electrical connectivity of conductive tracks **250** for forward/reserve detection are discuss in co-pending Patent Publication no. 2012/0292063 filed May 21, 2012, which is incorporated herein by reference in its entirety.

[0067] According to an embodiment, input unit **110** further includes a variable-speed actuator **230**. Variable-speed actuator includes a link member **232** that extends out of the module housing **204** from a sliding member **234** that is arranged inside the module housing **204** and supports a conductive wiper **236**. Link member **232** is coupled to trigger **120** that is engageable by the user. The sliding member **234** supports and engages a compression spring **238** its longitudinal end opposite link member **232**. Compression spring **238** is located between an inner wall of the module housing **204** and the sliding member **234**. When the user presses the trigger **120**, the sliding member **234** moves against a biasing force of the spring **238**.

[0068] Conductive wiper **236** contacts a speed-sensing member located on the surface of the PCB **202**. In an embodiment, the speed-sensing member is a series of variable-speed conductive tracks **240** arranged on the PCB **202**. Actuation of the trigger **120** moves the conductive wiper **236** over the conductive tracks **240**. Initial movement of the conductive wiper **236** over the conductive tracks **240** generates a signal that turns controller **218** ON. Additionally, an analog variable-voltage signal is generated based on the movement of the conductive wiper **128** over the conductive tracks and that signal is sent to the micro-controller. This signal is indicative of the desired motor speed. Functional details of ON/OFF and variable-speed detection using conductive tracks **240** are discuss in co-pending Patent Publication no. 2012/0292063 filed May 21, 2012, which is incorporated herein by reference in its entirety. It must be understood, however, that any known variable-voltage speed-sensing mechanism, such as a resistive tape, may be a utilized within the scope of the invention.

[0069] It is noted that the moving mechanical parts of the forward/reverse actuator **220** and variable-speed actuator **230** (including the electrical connector **222** and conductive wiper **236**), alone or in combination with conductive tracks **240** and **250**, are referred to in this disclosure as "electro-mechanical" elements.

[0070] FIG. **5** depicts a top view of PCB **202** alone without any components mounted. As shown herein, PCB **202** is provided with metal traces **282** for mounting the power switches **206**, as well as variable-speed conductive tracks **240** and forward/reverse conductive **250**. Through-hole **254** and auxiliary terminal **252** is also shown in this figure.

[0071] In an embodiment, a layer of silicon conformal coating is applied to the PCB **202** to protect it from dust, debris, moisture, and extreme temperature changes. However, since the conductive tracks **250** and **240** need to remain exposed to make electrical contact with the forward/reverse electrical connector **222** and variable-speed conductive wiper **236**, a high temperature resistant tape **284** is applied to the PCB **202** over the conductive tracks **240** and **250** before the silicon conformal coating is applied. The high temperature resistant tape **284** ensures that the silicon conformal coating does not cover the conductive tracks **240** and **250**.

[0072] In an embodiment, since no conformal coating is provided to protect the conductive tracks **250** and **240**, conductive tracks **250** and **240** are prone to damage from debris, contamination, and moisture. In addition, electro-mechanical components of the input unit (i.e., forward/reverse actuator **220** and variable-speed actuator **230**, particularly forward/reverse electrical connector **222** and variable-speed conductive wiper **236**) are also similarly prone to damage or faulty contact with the conductive tracks **200** and **250**. For this reason, the conductive tracks **250** and **240** and the electro-mechanical elements of the input unit **110** are arranged inside the enclosed compartment **210***a* of the control module **200**, where the encapsulation member **260** mates with the module housing **204** to seal and protect these components from dust, contamination, and/or moisture. In an embodiment, encapsulation member **260** substantially encloses the area **284** around the conductive tracks **250** and **240**. In an embodiment, encapsulation member also encloses the space around the electro-mechanical components including contact member **220***a* of the forward/reverse actuator **220**, sliding member **234** of the variable-speed actuator **230**, spring **238**, etc.

[0073] Referring back to FIGS. **3**A and **3**C, in an embodiment, mating surfaces of encapsulation member **260** and module housing **204** includes support features **286***a*, **286***b* that receive and support link member **232** of variable-speed actuator **230**, forming an aperture for the link member **232** to slidably extend out of the module housing **204**. In an embodiment, the link member **232** is laterally secured in the aperture via one or more rings **233**. Similarly, mating surfaces of encapsulation member **260** and module housing **204** includes pivot support features **288***a*, **288***b* that receive and support pivot member **220***c* of forward/reverse actuator **220**, forming an aperture for the engagement member **220***b* of the forward/reverse actuator **220** to extend out of the module housing **204**.

[0074] In an embodiment, encapsulation member **260** not only protects the input unit **110** from dust and contamination, it also acts as a mechanical constrain for its mechanical components. In an embodiment, encapsulation member **260** includes a first chamber **290** that houses the sliding member **234** and compression spring **238** of the variable-speed actuator **230**, and a second chamber **292** that houses the contact member **220***a* of the forward/reverse actuator **220**. The first chamber **290** forms an axial channel for the back and forth movement of the sliding member **234** and mechanically

restrains its lateral movement. In an embodiment, this arrangement ensures that there is always contact between the wiper **236** and the conductive tracks **240**. Similarly, the second chamber **290** facilitates the pivoting movement of the forward/reverse actuator **220**.

[0075] Referring now to FIGS. **6** and **7**, additional features for sealing the enclosed compartment **210***a* from outside contamination are discussed herein, according to an embodiment.

[0076] As shown in FIG. **6**, according to an embodiment, encapsulation member **260** includes a wall **294** arranged to rest on the PCB **202** when the encapsulation member **260** is mounted in order to fully enclose the enclosed compartment **210***a*, in an embodiment. In an embodiment, an adhesive may be applied to block any gaps between the wall **294** and the PCB **202**. Alternatively, in an embodiment, during the assembly process, encapsulation member **260** is mounted on the module housing **204** immediately or shortly after conformal coating **295** is applied to PCB **202**, preferably prior to conformal coating **295** cooing down. In this manner, once conformal coating **295** is cooled and hardened, it acts as a seal between the wall **294** of the encapsulation member **260** and the PCB **202**.

[0077] As shown in FIG. **7**, and as discussed above, encapsulation member **260** further includes mating features **266** that mate with corresponding mating features **268** on the module housing **204**. In an embodiment, mating surfaces of encapsulation member **260** and module housing **204** are additionally respectively provided with tongue **296** and groove **298** features to seal the mating surfaces of encapsulation member **260** and the housing **204** and block or reduce entry of dust or contamination into the enclosed compartment **210***a*.

[0078] While exemplary embodiments of the invention are discussed with reference to a module housing **204**, it must be understood that the compartmental concepts of the invention for sealing the electro-mechanical components associated with the input unit **101** components while leaving the power switches **206** exposed may be applied to alternative embodiments. For example, it is envisioned that a PCB **202** is disposed within a tool housing **102** without a separate module housing **204**. In that case, an encapsulation member may be provided to around the enclosed compartment **210***a* of the PCB **202**, with walls mounted and sealed to both surfaces of the PCB **202**. Alternatively, encapsulation member may be mounted directly on the PCB **202** without a need for a separate module housing **204**. It is also envisioned that in some alternative embodiments, the enclosed compartment **210***a* is formed by an integral part of the tool housing **204** rather than a separate piece.

[0079] Another aspect of the invention is described herein with reference to FIGS. **8** and **9**A-**9**C.

[0080] As described above, most power tools used for drilling and cutting operations need to be operated in both forward and reverse directions. The forward/reverse actuator **220** described above is provided for that purpose. Moreover, in an embodiment, the forward/reverse actuator **220** may be provided with a third setting—a locked position—to secure lock the power tool system from running inadvertently. Effective, repeatable and reliable positional control of the contact member **220***a* (hereinafter also referred to as "lever" **220***a*) is needed to provide all three functions (i.e., forward run, reverse run, and lock). In an embodiment, this position control is provided by biasing member **224** (herein also referred to as forward/reverse spring **224**), described herein.

[0081] In an embodiment, forward/reverse spring **224** includes a lever engaging member **302** that includes upper and lower portions **302***a* and **302***b* with a groove formed **302***c* therebetween. In an embodiment, the upper and lower portions **302***a*, **302***b* are arranged at an obtuse angle **8** of approximately 120 to 150 degrees with respect to one another. The groove **302***c* is formed at the end common point (vertex) of the angle between the upper and lower portions **302***a*, **302***b*, towards the interior of the angle. The lever engaging member **302** engages a contact tip **300** of lever **220***a* of the forward/reverse actuator **220** to bias the forward/reverse actuator **220** in a forward (FIG. **9**A), locked (FIG. **9**B), or reverse (FIG. **9**C) positions. Extending longitudinally from an end of upper portion **302***a* is an extension portion **304** that is substantially horizontal with respect to a plane of the PCB **202**. A first leg **306** extends downwardly from an end of the extension portion **304** at close to a right angle. First leg **306** is securely places in an opening between first and second walls **320**, **322** of post **226** projecting from a bottom surface **227** of the module housing **204**. In an embodiment, first leg **306** includes an angular rib **308** that engages first wall **320** to secure the first leg **306** within the opening. In an embodiment, first leg **306** also includes a humped surface **310** that is pressed against the first wall **320** to provide further stability. In an embodiment, extending from an end of the lower portion **302***b* is a second leg **312** folding inwardly and positioned between the lever engaging member **302** and the first leg **306**. In an embodiment, the second leg **312** extends upwardly along an axis that is less than parallel to an axis of the first leg **306** (e.g., where the two axes for an angle of less than 20 degrees, preferably less than 10 degrees). When assembled, second leg **312** engages an outer face of second wall **322** of the post **226**. Second leg **312** includes a contact portion **314** that makes contact with the outer face of second wall **322**, in an embodiment.

[0082] As shown in FIG. **9**A, in a forward direction, contact tip **300** engages the upper portion **302***a* of the lever engaging member **302** and is biased away from the PCB **202**. In this position, the biasing force is applied by the upper portion **302***a* and a top of the first leg **306** of the forward/reverse spring **224**, which is resiliently forced towards the first wall **320**. The second leg **312** in this position has minimal or no contact with the second wall **322** and thus applies less biasing force on the contact tip **300**.

[0083] As shown in FIG. **9**B, as the forward/reverse actuator **220** is pivoted to the locked position, contact tip **300** slides down the upper portion **302***a* until it reaches the groove **302***c* of the lever engaging member **302**. As the contact tip **300** slides down, the biasing force on the contact tip **300** is applied by both the first and second legs **306** and **312** against the first and second walls **320** and **322**, respectively. When in the locked position, in an embodiment, only one leg of the electrical connector **222** is in contact with the PCB **202**.

[0084] As shown in FIG. **9**C, as the forward/reverse actuator **220** is pivoted to the reverse position, contact tip **300** slides down from the groove **302***c* over the lower portion **302***b* of the lever engaging member **302**. As the contact tip **300** slides down, the biasing force on the contact tip **300** is applied mostly by the second legs **312**, which comes into substantial contact with the second wall **322**. When in the reverse position, in an embodiment, both legs of the electrical connector **222** are in contact with the conductive tracks **250** on the PCB **202**, which send a voltage signal to the controller **218** indicative of the reverse position.

[0085] It is noted that forward/reverse spring **224** is very easy to assemble into the housing **204**. Whereas conventional designs required complicated retention features and precision assembly, assembling the forward/reverse spring **224** simply involves insertion of the first leg **306** into the post **226** opening.

[0086] In an embodiment, each leg of the electrical connector **222** includes a curved profile, as shown in FIGS. **9**A-**9**C. This profile allows the electrical connector **222** to have a smoother transition as it makes contact and slides over the conductive tracks **250** of the PCB **202**.

[0087] FIG. **10** provides a zoomed-in view depicting the arrangement of the forward/reverse actuator **220** and forward/reverse spring **224** within the housing **204**, according to an embodiment.

[0088] Another aspect of the invention is described herein with reference to FIGS. **10**-**12**. As discussed above, compression spring **238**, sliding member **234**, and link member **232** of the variable-speed actuator **230** are enclosed by encapsulation member **260**. During the assembly process, the spring **238** is at least partially compressed to allow its first end to engage the sliding member **234** and its second end to engage another restraining member, such as an inner wall of the housing **204**. Since the spring **238** has to be left in its partially-compressed state, it is difficult to hold spring **238** down in place while the encapsulation cover **240** is mounted on the module housing **204** as the spring **238** tends to spring out of place.

[0089] To solve this problem, according to an embodiment of the invention, a spring post **244** is provided on the inner wall of the housing **204** where an end of the compression spring **238** makes contact. In an embodiment, a pocket **245** is additionally provided as a recess within the inner wall of the module housing **204** and the post **244** projects from a center of the pocket **245**. In other words, the pocket **245** forms as a halo around the post **244**. FIG. **11** provides a cross-sectional view of the spring **234** engaging the post **244** and pocket **245**. FIG. **12** provides a zoomed-in view of the post **244** and pocket **245**. An end of the compression spring **238** is places around the spring post **244** within the pocket **245** during the assembly process. Post **244** and pocket **245** prevent the end of the spring **238** from moving around and springing out of position. In particular, in an embodiment, post **244** fits form-fittingly inside the inner diameter of the compression spring **238**, while the compression spring fits form-fittingly inside the pocket **245**.

[0090] In an embodiment, post **244** includes a lower surface **248** that projects substantially longitudinally and an upper surface **249** that is slanted away from the inner wall of the housing **204**. The lower surface **248** of the post helps retain the spring **238** in place along its longitudinal axis and blocks the spring **238** from springing upward, while the upper surface **249** provides for easier assembly of the spring **238** over the post **244**, i.e., by sliding the spring **238** over the post **244**.

[0091] In addition, in an embodiment, sliding member **234** is also provided with a pocket **246**. The other end of the spring **238** is received inside the pocket **246** of the sliding member **234**. The pocket **246** also prevents the spring **238** from moving around and springing out of position.

[0092] The combination of the sliding member pocket **246**, post **244**, and post pocket **245** decrease the degree of freedom of compression spring **238** during the assembly process. Constraining the motion of compression spring **238** during the assembly process makes the control module **200** assembly easy and decreases the time required for the assembly.

[0093] The example embodiments of the present invention being thus described, it will be obvious that the same may be varied in many ways. Such variations are not to be regarded as departure from the spirit and scope of the example embodiments of the present invention, and all such modifications as would be obvious to one skilled in the art are intended to be included within the scope of the following claims.

1. An electronic switch and control module for a power tool having an electric motor, comprising:

a module housing including a bottom surface, side walls, and an open face;

a printed circuit board (PCB) fittingly received from the open face of the module housing and securely disposed within the module housing;

an encapsulation member arranged to mate with a mating surface of the side walls of the module housing to form an enclosed compartment over a portion of the PCB to enclose at least one electronic or electro-mechanical element mounted on a surface of the PCB; and

a plurality of power switches mounted on the surface of the PCB within an open compartment of the module housing where the encapsulation member does not enclose the surface of the PCB, the power switches being electrically configured to switchably connect a supply of electric power from a power source to the electric motor.

2. The electronic switch and control module of claim **1**, further comprising a controller mounted on the PCB and coupled to the input unit and the plurality of power switches, the controller being configured to control the switching operation of the power switches based the signal from the input unit.

3. The electronic switch and control module of claim **1**, further comprising a heat sink arranged to transfer heat away from the power switches.

4. The electronic switch and control module of claim **1**, further comprising a plurality of heat sinks discretely mounted over a respective one of the plurality of power switches and secured to the surface of the PCB to transfer heat away from the power switches.

5. The electronic switch and control module of claim **1**, further comprising an input unit having at least one electro-mechanical element at least partially disposed within the enclosed component and generating a signal for controlling a switching operation of the plurality of power switches

6. The electronic switch and control module of claim **5**, wherein the electro-mechanical element of the input unit includes a speed-sensing member on the surface of the PCB and a variable-speed actuator having a sliding member in sliding contact with the speed-sensing member, wherein the speed-sensing member and the sliding member are disposed and substantially enclosed within the enclosed compartment, and the speed-sensing member generates the signal for controlling a switching operation of the plurality of power switches based on a sliding position of the sliding member.

7. The electric power module of claim **6**, wherein the variable-speed actuator further includes a variable-speed trigger disposed outside the module housing and a link slidably extending from the variable-speed through an aperture in the module housing into the enclosed compartment and coupled to the sliding member.

8. The electronic switch and control module of claim **5**, wherein the electro-mechanical element of the input unit

includes a contact-sensing member on the surface of the PCB and a forward/reverse actuator having a contact member in selective contact with the contact-sensing member, wherein the contact-sensing member and the contact member are disposed and substantially enclosed within the enclosed compartment, and the contact-sensing member generates the signal for controlling a rotational direction of the motor.

9. The electronic switch and control module of claim **8**, wherein the forward/reverse actuator further includes a pivot member supported by the module housing and an engagement member extending outside the module housing from the pivot member, the pivot member pivotably linking the contact member and the engagement member.

10. The electronic switch and control module of claim **1**, wherein the encapsulation member includes a wall arranged to rest on the surface of the PCB, a lower end of the wall being sealed to the surface of the PCB.

11. The electronic switch and control module of claim **1**, wherein the encapsulation member includes at least one of wire retention or wire guide features arranged to retain or guide wires coupled to the PCB.

12. The electronic switch and control module of claim **1**, further comprising a conformal coating applied on the surface of the PCB associated with the open compartment but not on at least a part of the surface of the PCB associated with the enclosed compartment.

13. The electronic switch and control module of claim **12**, wherein the encapsulation member includes a wall arranged to rest on the surface of the PCB, a lower end of the wall being sealed to the surface of the PCB via the conformal coating.

14. The electronic switch and control module of claim **1**, wherein the encapsulation member and the module housing include mating features for securely mounting the encapsulation member on the module housing.

15. The electronic switch and control module of claim **14**, wherein the mating features include a tongue provided on one of the encapsulation member or the module housing and a corresponding groove provided on the other of the encapsulation member or the module housing to form a seal between the encapsulation member and the module housing.

16. An electric power tool comprising:

an electric motor; and

an electronic switch and control module according to claim **1**.

17. The power tool of claim **16**, wherein the electric motor is a three-phase brushless DC motor and the power switches include six Field Effect Transistors connected as a three-phase bridge rectifier.

18. The power tool of claim **16**, wherein the electric motor is rotatably coupled to a fan inside a motor housing, and the electric power module is disposed in a tool handle in fluid communication with the motor such that an airflow is generated by the fan through the handle to transfer heat away from the power switches within the open compartment.

19. The power tool of claim **16** comprising a drill or an impact driver.

20. The power tool of claim **16**, comprising at least one of a variable speed trigger or a forward/reverse button engaging the input unit.

* * * * *