US 20030009214A1

(19) United States

(12) Patent Application Publication (10) Pub. No.: US 2003/0009214 A1

Shanley (43) Pub. Date: Jan. 9, 2003

(54) MEDICAL DEVICE WITH BENEFICIAL AGENT DELIVERY MECHANISM

(76) Inventor: **John F. Shanley**, Redwood City, CA (US)

Correspondence Address:
James W. Peterson
BURNS, DOANE, SWECKER & MATHIS, L.L.P.
P.O. Box 1404
Alexandria, VA 22313-1404 (US)

(21) Appl. No.: **10/231,007**

(22) Filed: **Aug. 30, 2002**

Related U.S. Application Data

(63) Continuation of application No. 09/649,217, filed on Aug. 28, 2000, which is a continuation of application No. 09/183,555, filed on Oct. 29, 1998, now Pat. No. 6,241,762.

(60) Provisional application No. 60/079,881, filed on Mar. 30, 1998.

Publication Classification

(51) **Int. Cl.**[7] **A61F 2/06**

(52) **U.S. Cl.** **623/1.15**

(57) **ABSTRACT**

An expandable tissue supporting device of the present invention employs ductile hinges at selected points in the expandable device. When expansion forces are applied to the device as a whole, the ductile hinges concentrate expansion stresses and strains in small well defined areas. The expandable medical device including ductile hinges provides the advantages of low expansion force requirements, relatively thick walls which are radio-opaque, improved crimping properties, high crush strength, reduced elastic recoil after implantation, and control of strain to a desired level. The expandable tissue supporting device includes a plurality of elongated beams arranged in a cylindrical device and connected together by a plurality of ductile hinges. Although many ductile hinge configurations are possible, the ductile hinges preferably have a substantially constant hinge cross sectional area which is smaller than a beam cross sectional area such that as the device is expanded from a first diameter to a second diameter, the ductile hinges experience plastic deformation while the beams are not plastically deformed.

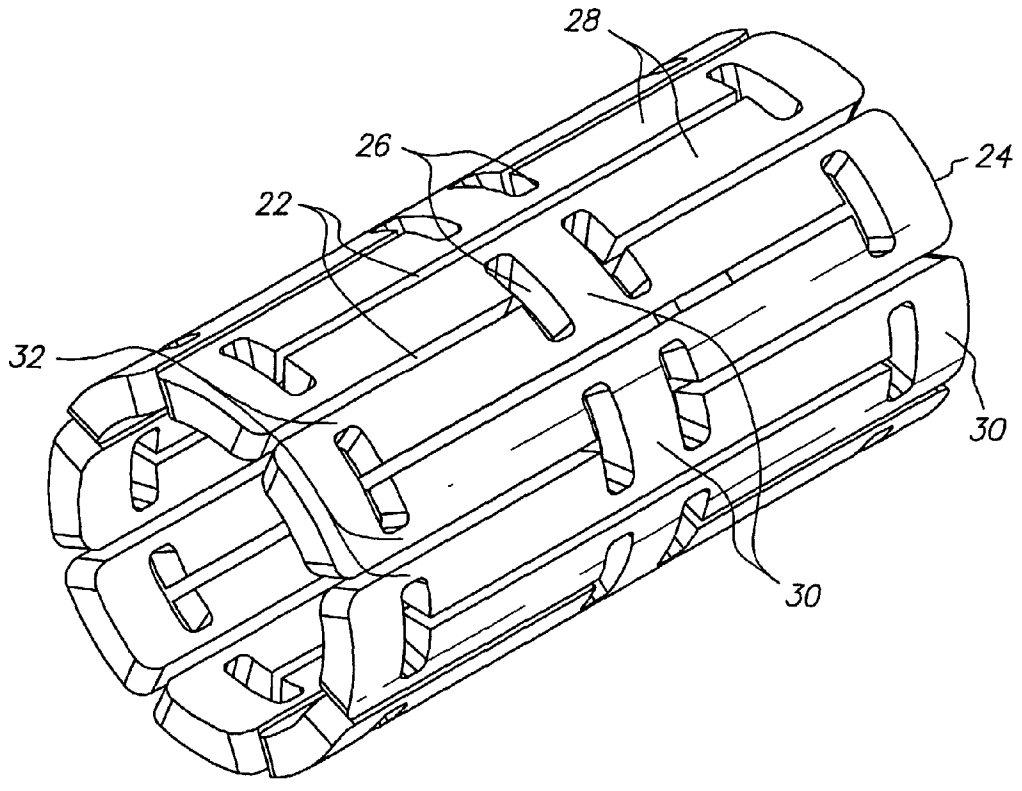

FIG. 1
PRIOR ART

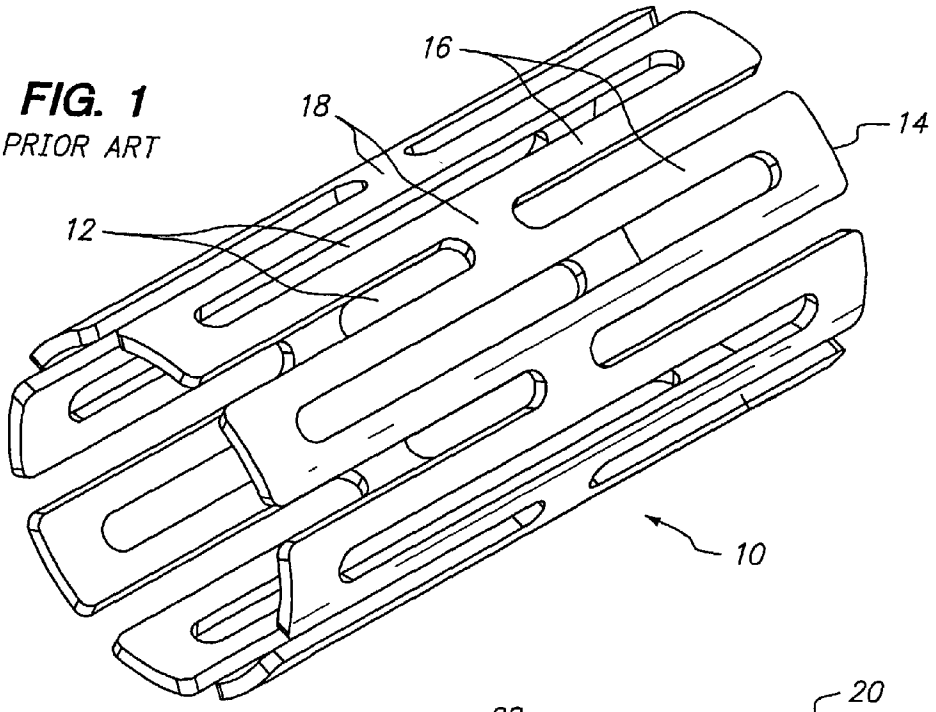

FIG. 2

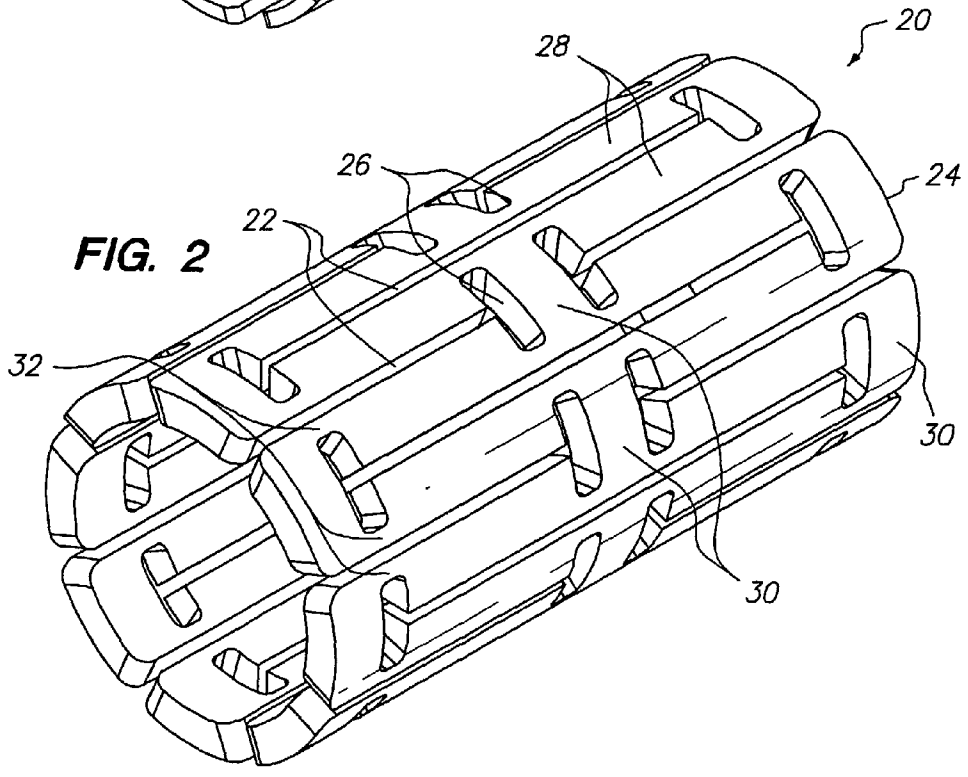

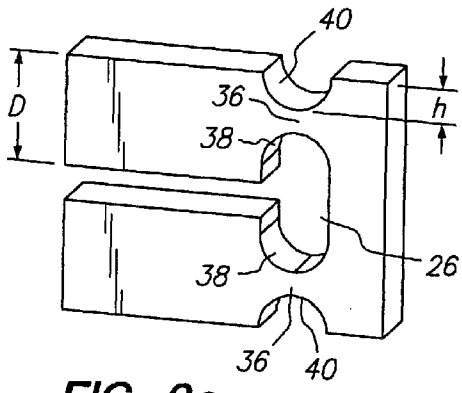

FIG. 3a

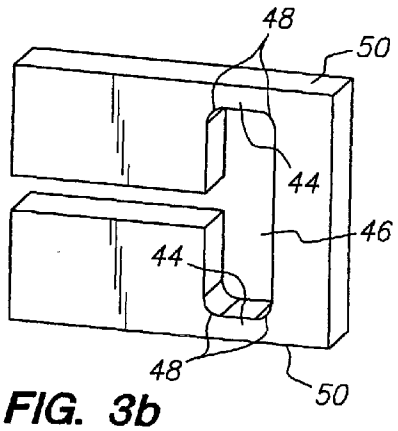

FIG. 3b

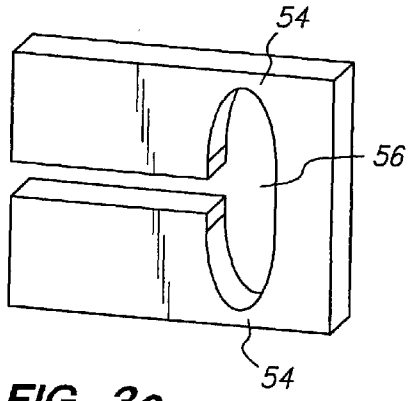

FIG. 3c

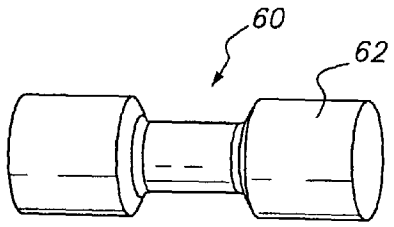

FIG. 3d

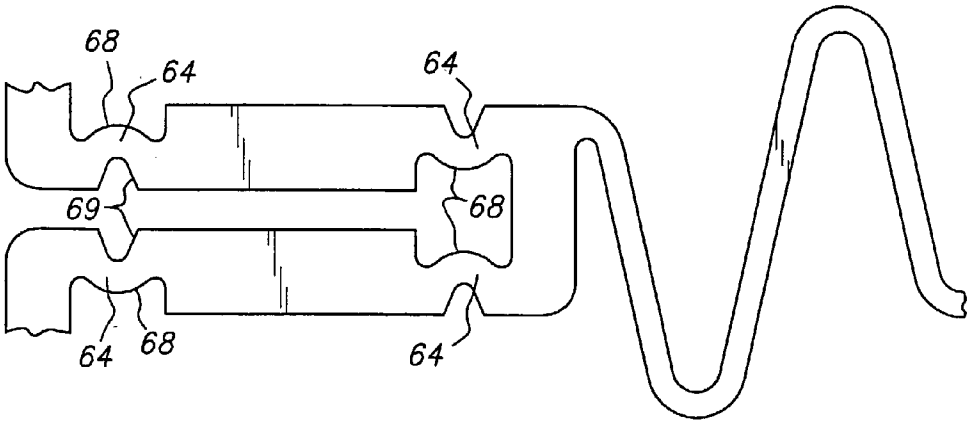

FIG. 3e

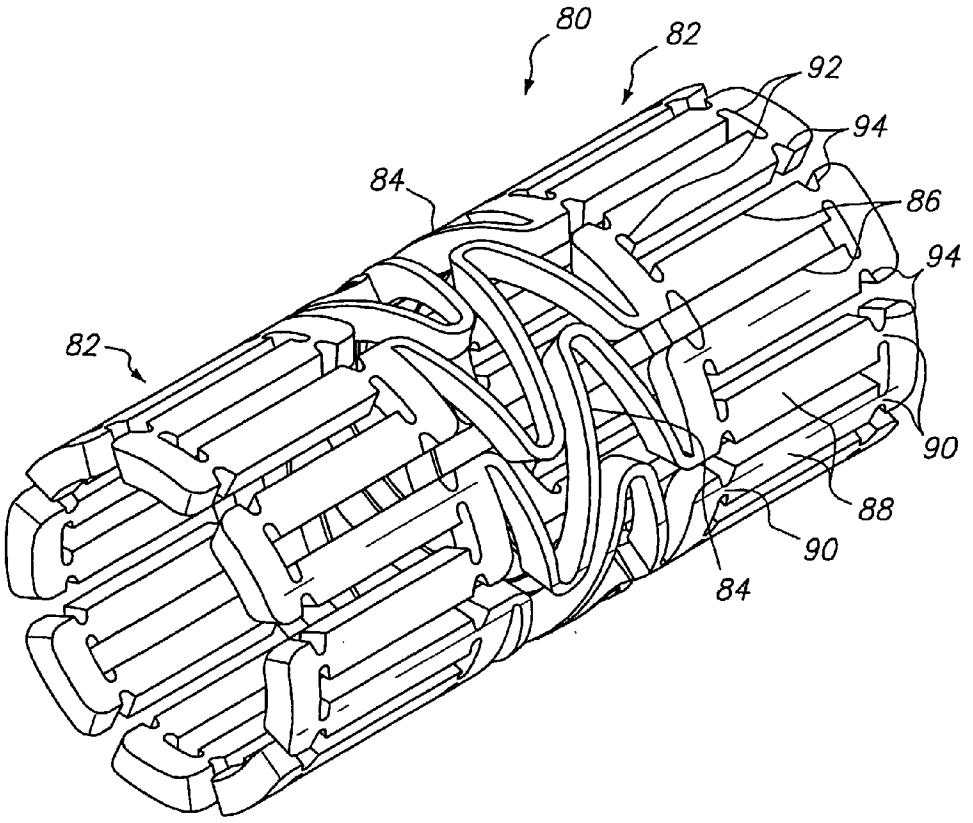

FIG. 4a

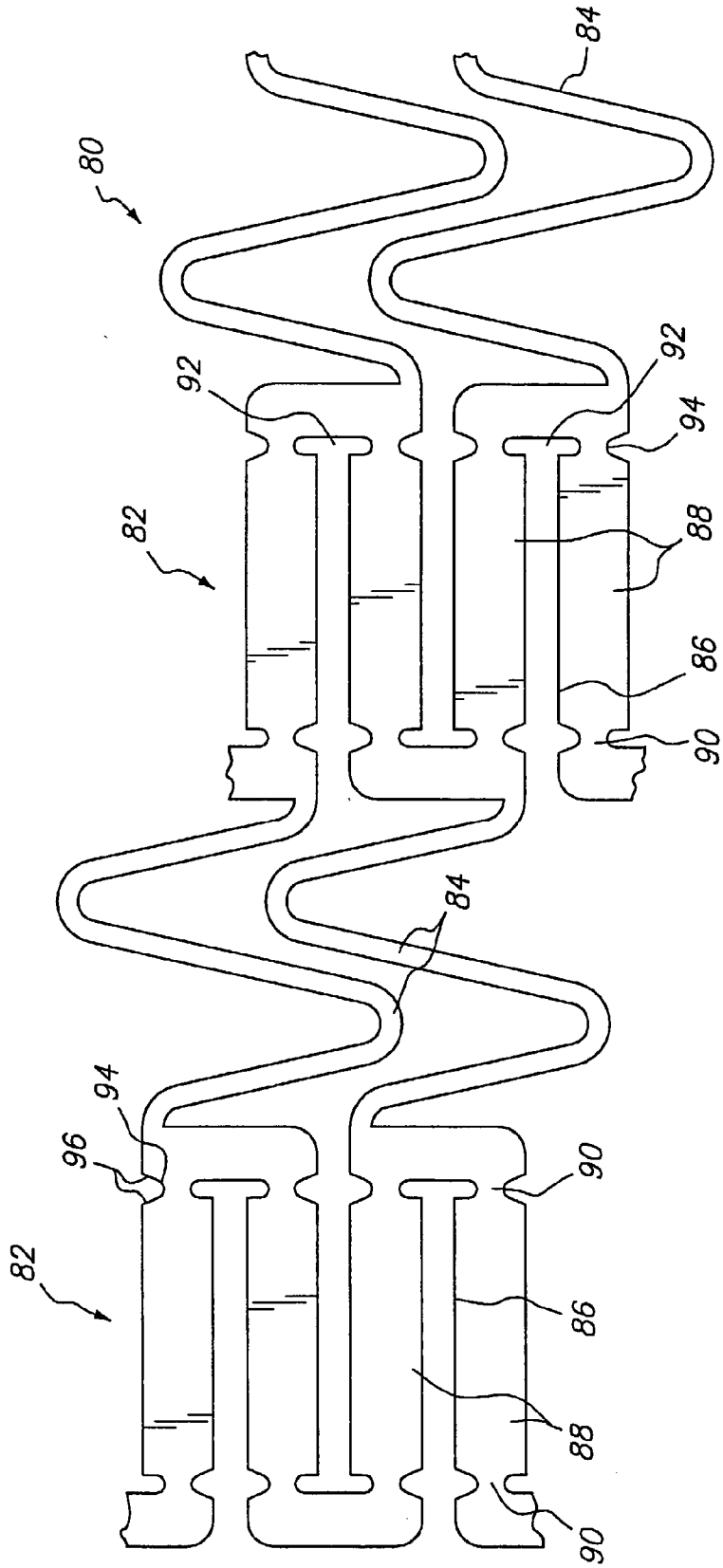

FIG. 4b

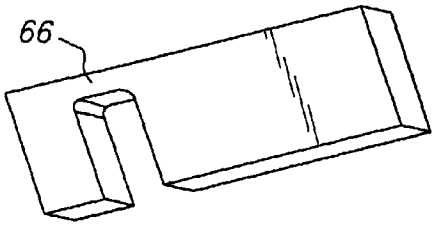

FIG. 5a

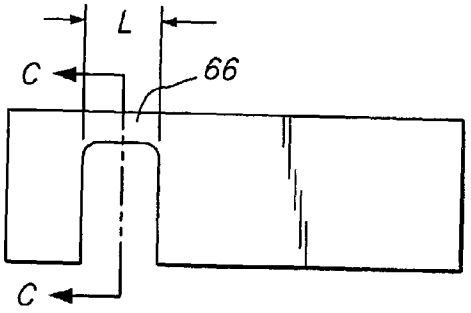

FIG. 5b

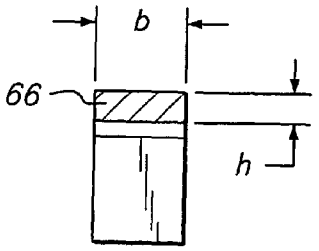

FIG. 5c

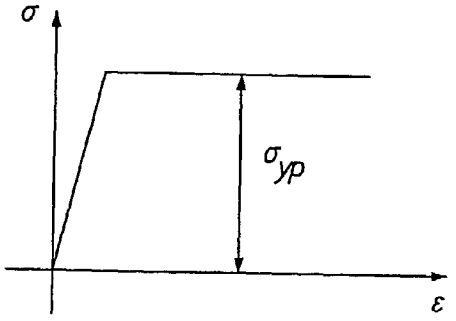

FIG. 5d

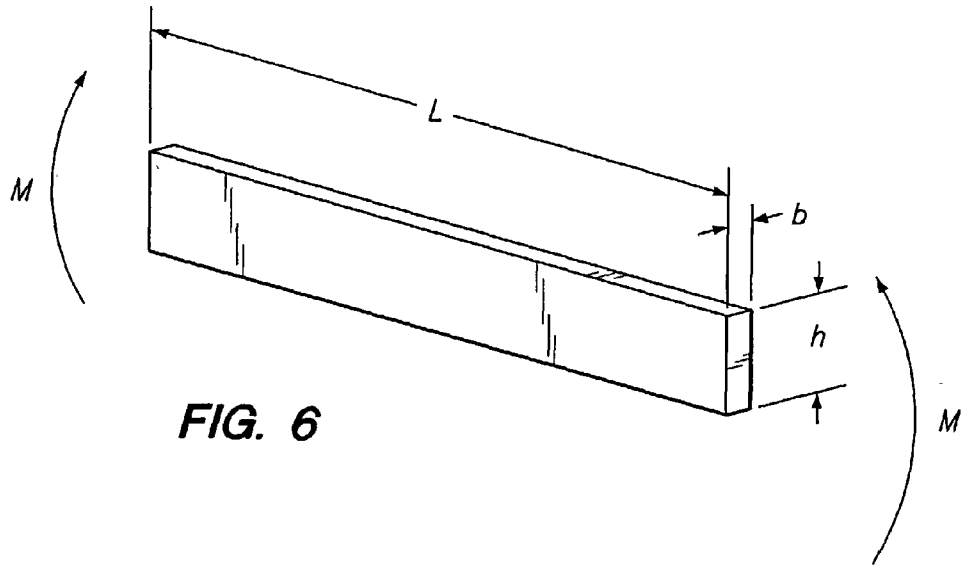
L
M
b
h
M

FIG. 6

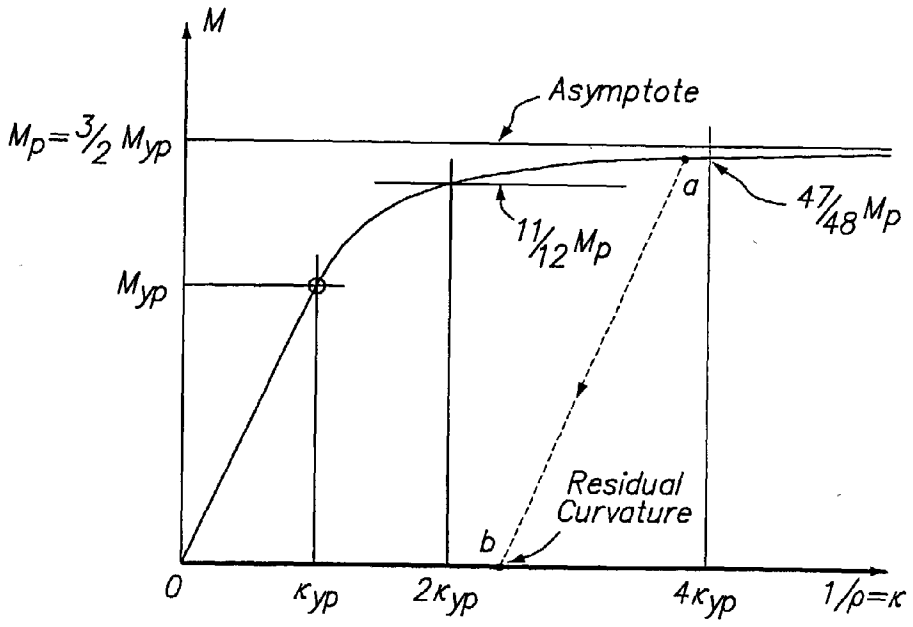
M
Asymptote
$M_p = 3/2\ M_{yp}$
$11/12\ M_p$
$47/48\ M_p$
a
M_{yp}
Residual Curvature
b
0
κ_{yp}
$2\kappa_{yp}$
$4\kappa_{yp}$
$1/\rho = \kappa$

FIG. 7

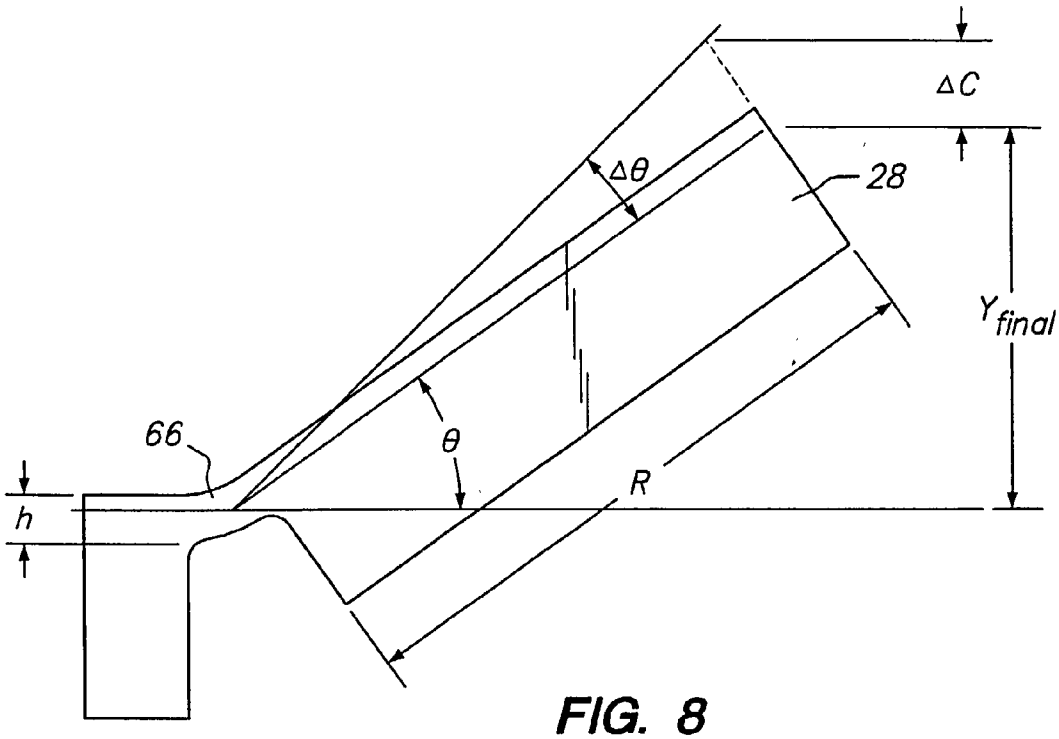

FIG. 8

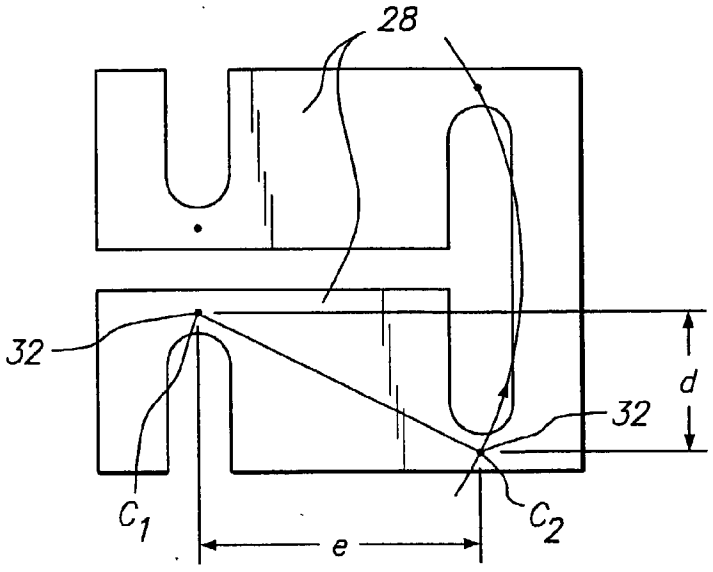

FIG. 9a

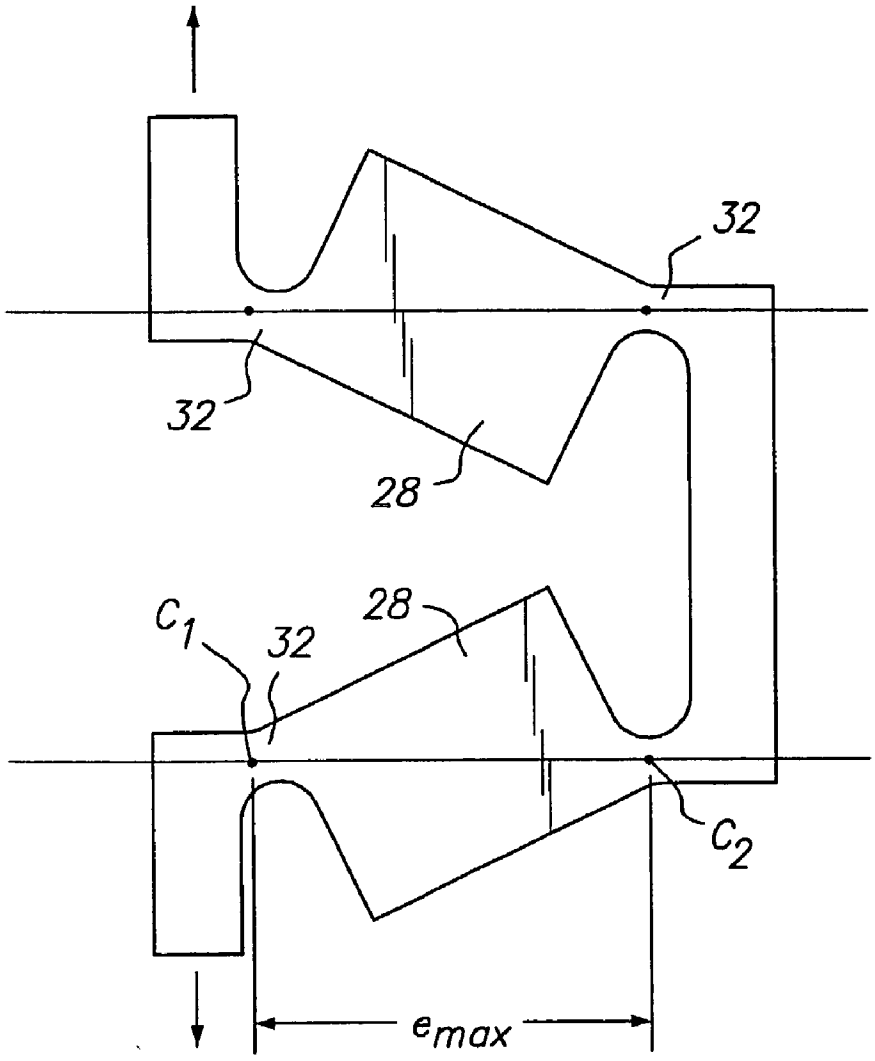

FIG. 9b

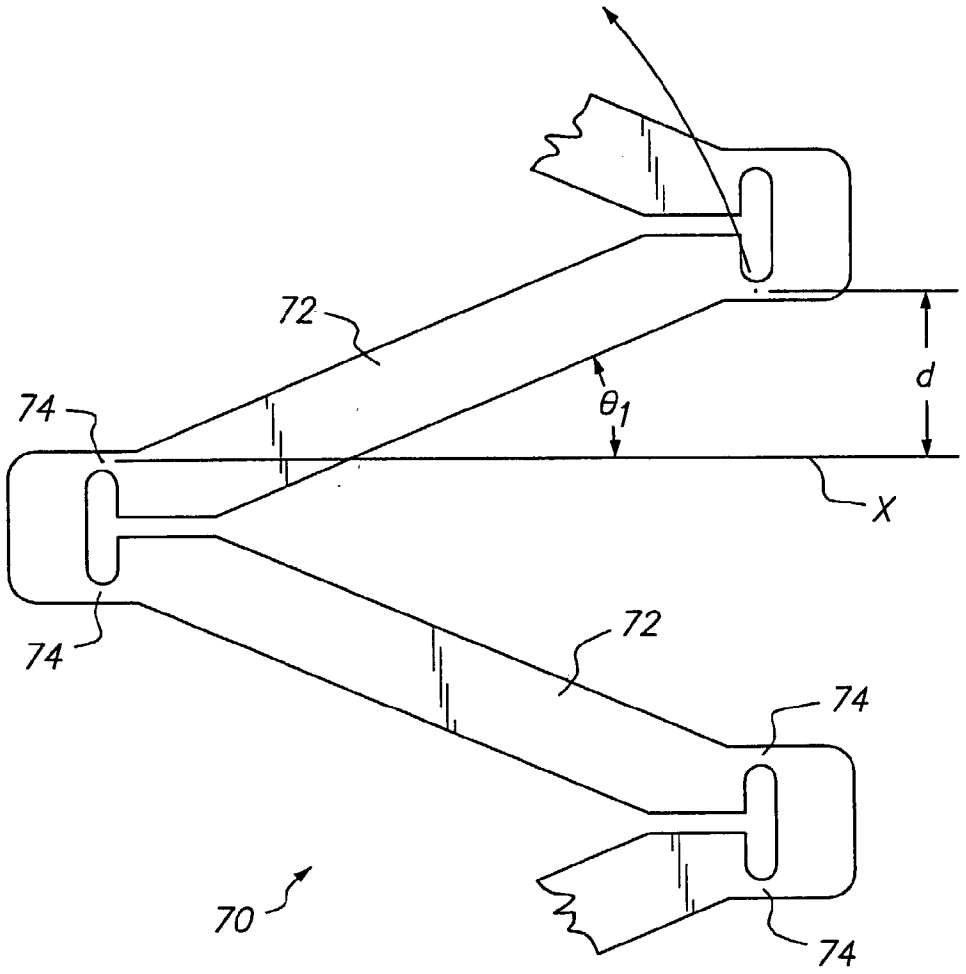

FIG. 10

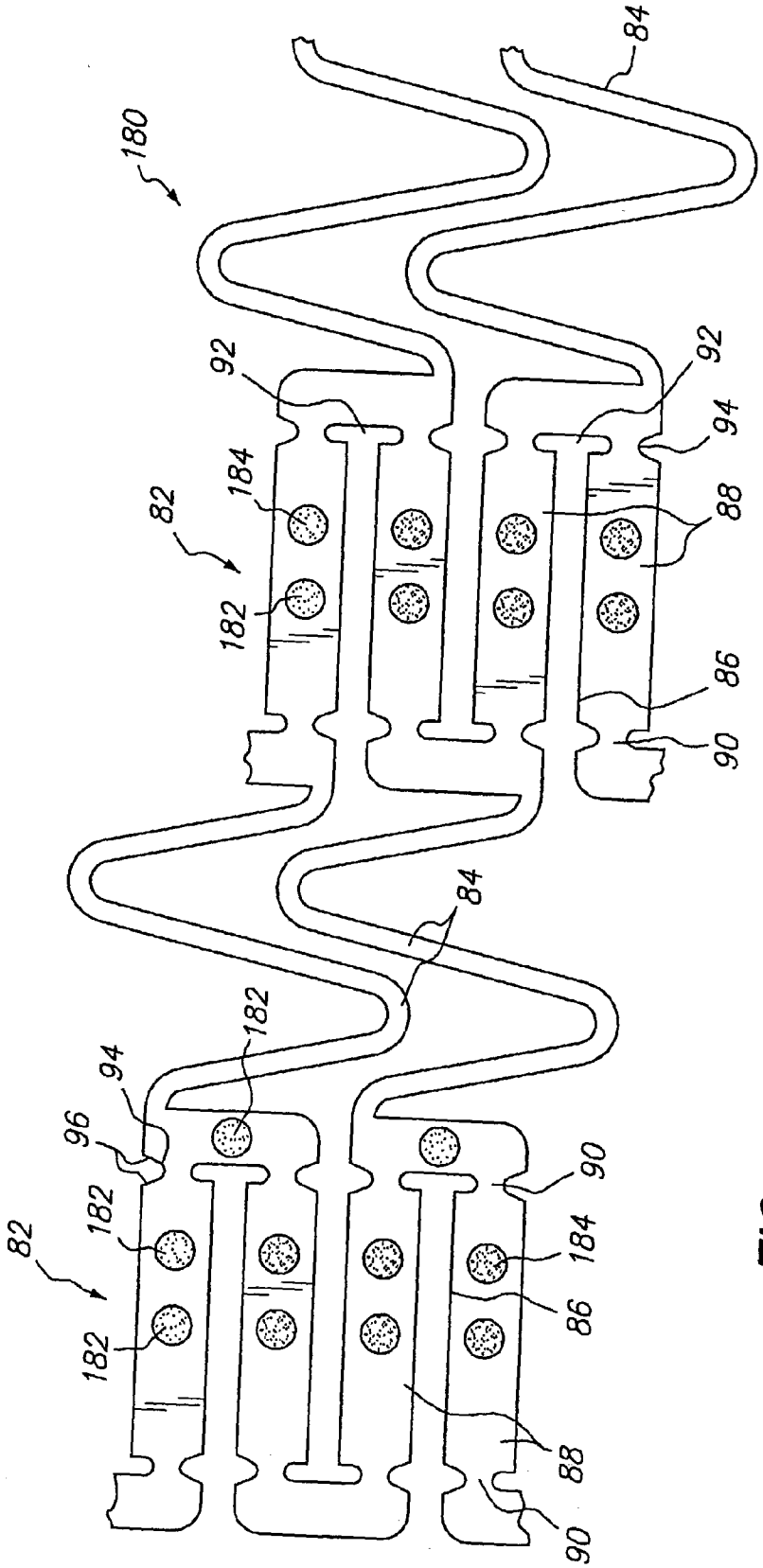
180
84
92
92
94
184
82
88
182
86
90
84
182
94
96
90
182
82
184
182
86
88
90

FIG. 11

MEDICAL DEVICE WITH BENEFICIAL AGENT DELIVERY MECHANISM

BACKGROUND OF THE INVENTION

[0001] 1. Field of the Invention

[0002] The present invention relates to tissue-supporting medical devices, and more particularly to expandable, non-removable devices that are implanted within a bodily lumen of a living animal or human to support the organ and maintain patency.

[0003] 2. Summary of the Related Art

[0004] In the past, permanent or biodegradable devices have been developed for implantation within a body passageway to maintain patency of the passageway. These devices are typically introduced percutaneously, and transported transluminally until positioned at a desired location. These devices are then expanded either mechanically, such as by the expansion of a mandrel or balloon positioned inside the device, or expand themselves by releasing stored energy upon actuation within the body. Once expanded within the lumen, these devices, called stents, become encapsulated within the body tissue and remain a permanent implant.

[0005] Known stent designs include monofilament wire coil stents (U.S. Pat. No. 4,969,458); welded metal cages (U.S. Pat. Nos. 4,733,665 and 4,776,337); and, most prominently, thin-walled metal cylinders with axial slots formed around the circumference (U.S. Pat. Nos. 4,733,665, 4,739,762, and 4,776,337). Known construction materials for use in stents include polymers, organic fabrics and biocompatible metals, such as, stainless steel, gold, silver, tantalum, titanium, and shape memory alloys such as Nitinol.

[0006] U.S. Pat. Nos. 4,733,665, 4,739,762, and 4,776,337 disclose expandable and deformable interluminal vascular grafts in the form of thin-walled tubular members with axial slots allowing the members to be expanded radially outwardly into contact with a body passageway. After insertion, the tubular members are mechanically expanded beyond their elastic limit and thus permanently fixed within the body. The force required to expand these tubular stents is proportional to the thickness of the wall material in a radial direction. To keep expansion forces within acceptable levels for use within the body (e.g., 5-10 atm), these designs must use very thin-walled materials (e.g., stainless steel tubing with 0.0025 inch thick walls). However, materials this thin are not visible on conventional fluoroscopic and x-ray equipment and it is therefore difficult to place the stents accurately or to find and retrieve stents that subsequently become dislodged and lost in the circulatory system.

[0007] Further, many of these thin-walled tubular stent designs employ networks of long, slender struts whose width in a circumferential direction is two or more times greater than their thickness in a radial direction. When expanded, these struts are frequently unstable, that is, they display a tendency to buckle, with individual struts twisting out of plane. Excessive protrusion of these twisted struts into the bloodstream has been observed to increase turbulence, and thus encourage thrombosis. Additional procedures have often been required to attempt to correct this problem of buckled struts. For example, after initial stent implantation is determined to have caused buckling of struts, a second, high-pressure balloon (e.g., 12 to 18 atm) would be used to attempt to drive the twisted struts further into the lumen wall. These secondary procedures can be dangerous to the patient due to the risk of collateral damage to the lumen wall.

[0008] Many of the known stents display a large elastic recovery, known in the field as "recoil," after expansion inside a lumen. Large recoil necessitates over-expansion of the stent during implantation to achieve the desired final diameter. Over-expansion is potentially destructive to the lumen tissue. Known stents of the type described above experience recoil of up to about 6 to 12% from maximum expansion.

[0009] Large recoil also makes it very difficult to securely crimp most known stents onto delivery catheter balloons. As a result, slippage of stents on balloons during interlumenal transportation, final positioning, and implantation has been an ongoing problem. Many ancillary stent securing devices and techniques have been advanced to attempt to compensate for this basic design problem. Some of the stent securing devices include collars and sleeves used to secure the stent onto the balloon.

[0010] Another problem with known stent designs is non-uniformity in the geometry of the expanded stent. Non-uniform expansion can lead to non-uniform coverage of the lumen wall creating gaps in coverage and inadequate lumen support. Further, over expansion in some regions or cells of the stent can lead to excessive material strain and even failure of stent features. This problem is potentially worse in low expansion force stents having smaller feature widths and thicknesses in which manufacturing variations become proportionately more significant. In addition, a typical delivery catheter for use in expanding a stent includes a balloon folded into a compact shape for catheter insertion. The balloon is expanded by fluid pressure to unfold the balloon and deploy the stent. This process of unfolding the balloon causes uneven stresses to be applied to the stent during expansion of the balloon due to the folds causing the problem non-uniform stent expansion.

[0011] U.S. Pat. No. 5,545,210 discloses a thin-walled tubular stent geometrically similar to those discussed above, but constructed of a nickel-titanium shape memory alloy ("Nitinol"). This design permits the use of cylinders with thicker walls by making use of the lower yield stress and lower elastic modulus of martensitic phase Nitinol alloys. The expansion force required to expand a Nitinol stent is less than that of comparable thickness stainless steel stents of a conventional design. However, the "recoil" problem after expansion is significantly greater with Nitinol than with other materials. For example, recoil of a typical design Nitinol stent is about 9%. Nitinol is also more expensive, and more difficult to fabricate and machine than other stent materials, such as stainless steel.

[0012] All of the above stents share a critical design property: in each design, the features that undergo permanent deformation during stent expansion are prismatic, i.e., the cross sections of these features remain constant or change very gradually along their entire active length. To a first approximation, such features deform under transverse stress as simple beams with fixed or guided ends: essentially, the features act as a leaf springs. These leaf spring like structures are ideally suited to providing large amounts of elastic deformation before permanent deformation com-

mences. This is exactly the opposite of ideal stent behavior. Further, the force required to deflect prismatic stent struts in the circumferential direction during stent expansion is proportional to the square of the width of the strut in the circumferential direction. Expansion forces thus increase rapidly with strut width in the above stent designs. Typical expansion pressures required to expand known stents are between about 5 and 10 atmospheres. These forces can cause substantial damage to tissue if misapplied.

[0013] **FIG. 1** shows a typical prior art "expanding cage" stent design. The stent **10** includes a series of axial slots **12** formed in a cylindrical tube **14**. Each axial row of slots **12** is displaced axially from the adjacent row by approximately half the slot length providing a staggered slot arrangement. The material between the slots **12** forms a network of axial struts **16** joined by short circumferential links **18**. The cross section of each strut **16** remains constant or varies gradually along the entire length of the strut and thus the rectangular moment of inertia and the elastic and plastic section moduli of the cross section also remain constant or vary gradually along the length of the strut. Such a strut **16** is commonly referred to as a prismatic beam. Struts **16** in this type of design are typically 0.005 to 0.006 inches (0.127-0.1524 mm) wide in the circumferential direction. Strut thicknesses in the radial direction are typically about 0.0025 inches (0.0635 mm) or less to keep expansion forces within acceptable levels. However, most stent materials must be approximately 0.005 inches (0.127 mm) thick for good visibility on conventional fluoroscopic equipment. This high ratio of strut width to thickness, combined with the relatively high strut length and the initial curvature of the stent tubing combine to cause the instability and bucking often seen in this type of stent design. When expanded, the stent structure of **FIG. 1** assumes the roughly diamond pattern commonly seen in expanded sheet metal.

[0014] Another stent described in PCT publication number WO 96/29028 uses struts with relatively weak portions of locally-reduced cross sections which on expansion of the stent act to concentrate deformation at these areas. However, as discussed above non-uniform expansion is even more of a problem when smaller feature widths and thicknesses are involved because manufacturing variations become proportionately more significant. The locally-reduced cross section portions described in this document are formed by pairs of circular holes. The shape of the locally-reduced cross section portions undesirably concentrates the plastic strain at the narrowest portion. This concentration of plastic strain without any provision for controlling the level of plastic strain makes the stent highly vulnerable to failure.

[0015] In view of the drawbacks of the prior art stents, it would be advantageous to be able to expand a stent with an expansion force at a low level independent of choice of stent materials, material thickness, or strut dimensions.

[0016] It would further be advantageous to have a tissue-supporting device that permits a choice of material thickness that could be viewed easily on conventional fluoroscopic equipment for any material.

[0017] It would also be advantageous to have a tissue-supporting device that is inherently stable during expansion, thus eliminating buckling and twisting of structural features during stent deployment.

[0018] It would also be desirable to control strain to a desired level which takes advantage of work hardening without approaching a level of plastic strain at which failure may occur.

[0019] In addition, it would be advantageous to have a tissue-supporting device with minimal elastic recovery, or "recoil" of the device after expansion.

[0020] It would be advantageous to have a tissue supporting device that can be securely crimped to the delivery catheter without requiring special tools, techniques, or ancillary clamping features.

[0021] It would further be advantageous to have a tissue-supporting device that has improved resistance to compressive forces (improved crush strength) after expansion.

[0022] It would also be advantageous to have a tissue-supporting device that achieves all the above improvements with minimal foreshortening of the overall stent length during expansion.

SUMMARY OF THE INVENTION

[0023] The present invention addresses several important problems in expandable medical device design including: high expansion force requirements; lack of radio-opacity in thin-walled stents; buckling and twisting of stent features during expansion; poor crimping properties; and excessive elastic recovery ("recoil") after implantation. The invention also provides benefits of improved resistance to compressive forces after expansion, control of the level of plastic strain, and low axial shortening during expansion. Some embodiments of the invention also provide improved uniformity of expansion by limiting a maximum geometric deflection between struts. The invention may also incorporate sites for the inclusion of beneficial agent delivery.

[0024] The invention involves the incorporation of stress/strain concentration features or "ductile hinges" at selected points in the body of an expandable cylindrical medical device. When expansion forces are applied to the device as a whole, these ductile hinges concentrate expansion stresses and strains in small, well-defined areas while limiting strut deflection and plastic strain to specified levels.

[0025] In accordance with one aspect of the present invention, an expandable medical device includes a plurality of elongated beams having a substantially constant beam cross sectional area along a beam length. The plurality of elongated beams are joined together to form a substantially cylindrical device which is expandable from a cylinder having a first diameter to a cylinder having a second diameter. A plurality of ductile hinges connect the plurality of beams together in the substantially cylindrical device. The ductile hinges have a substantially constant hinge cross sectional area along a substantial portion of a hinge length. The hinge cross sectional area is smaller than the beam cross sectional area such that as the device is expanded from the first diameter to the second diameter the ductile hinges experience plastic deformation while the beams are not plastically deformed.

[0026] In accordance with a further aspect of the invention, an expandable medical device includes a cylindrical tube, and a plurality of axial slots formed in the cylindrical tube in a staggered arrangement to define a network of

elongated struts, wherein each of the elongated struts are axially displaced from adjacent struts. A plurality of ductile hinges are formed between the elongated struts. The ductile hinges allow the cylindrical tube to be expanded or compressed from a first diameter to a second diameter by deformation of the ductile hinges. The ductile hinges are asymmetrically configured to reach a predetermined strain level upon a first percentage expansion and to reach the predetermined strain level upon a second percentage of compression, wherein the first percentage is larger than the second percentage.

[0027] In accordance with another aspect of the present invention, an expandable medical device includes a plurality of elongated beams having a substantially constant beam cross sectional area along a beam length. A plurality of ductile hinges connect the plurality of beams together in a substantially cylindrical device which is expandable or compressible from a first diameter to a second diameter by plastic deformation of the ductile hinges. A plurality of deflection limiting members are positioned at a plurality of the ductile hinges which limit the deflection at the ductile hinges.

BRIEF DESCRIPTION OF THE DRAWINGS

[0028] The invention will now be described in greater detail with reference to the preferred embodiments illustrated in the accompanying drawings, in which like elements bear like reference numerals, and wherein:

[0029] **FIG. 1** is an isometric view of a prior art tissue-supporting device;

[0030] **FIG. 2** is an isometric view of a tissue-supporting device in accordance with one embodiment of the invention;

[0031] **FIGS. 3***a-d* are perspective views of ductile hinges according to several variations of the invention;

[0032] **FIG. 3***e* is a side view of another embodiment of a ductile hinge;

[0033] **FIGS. 4***a* and **4***b* are an isometric view and an enlarged side view of a tissue-supporting device in accordance with an alternative embodiment of the invention;

[0034] **FIGS. 5***a-c* are perspective, side, and cross-sectional views of an idealized ductile hinge for purposes of analysis;

[0035] **FIG. 5***d* is a stress/strain curve for the idealized ductile hinge;

[0036] FIGS. **6** is a perspective view of a simple beam for purposes of calculation;

[0037] **FIG. 7** is a moment verses curvature graph for a rectangular beam;

[0038] **FIG. 8** is an enlarged side view of a bent ductile hinge;

[0039] **FIGS. 9***a* and **9***b* are enlarged side views of ductile hinges in initial and expanded positions with shortened struts to illustrate axial contraction relationships; and

[0040] **FIG. 10** is a side view of a portion of an alternative embodiment of a tissue supporting device having a high-crush-strength and low-recoil.

DETAILED DESCRIPTION OF THE PREFERRED EMBODIMENTS

[0041] **FIG. 2** shows one embodiment of an expandable tissue supporting device **20** in accordance with the present invention. The tissue supporting device **20** includes a series of axial slots **22** formed in a cylindrical tube **24**. Each axial slot **22** is displaced axially from the slots in adjacent rows of slots by approximately half the slot length resulting in a staggered slot arrangement. The offset between adjacent rows of slots results in alternate rows of slots which extend to the ends of the cylindrical tube **24**. At each interior end of each of the axial slots **22** a circumferential slot **26** is formed. The material between the slots **22** forms a network of axial struts **28** extending substantially parallel to an axis of the tube **24**. The axial struts **28** are joined by short circumferential links **30**. The circumferential links **30** are positioned at both the interior of the cylindrical tube and at the ends of the cylindrical tube. The cross section (and rectangular moment of inertia) of each of the struts **28** is not constant along the length of the strut. Rather, the strut cross section changes abruptly at both ends of each strut **28** at the location of the circumferential slots **26**. The struts **28** are thus not prismatic. Each individual strut **28** is linked to the rest of the structure through a pair of reduced sections **32**, one at each end, which act as stress/strain concentration features. The reduced sections **32** of the struts function as hinges in the cylindrical structure. Since the stress/strain concentration features **32** are designed to operate into the plastic deformation range of generally ductile materials, they are referred to as ductile hinges. Such features are also commonly referred to as "Notch Hinges" or "Notch Springs" in ultra-precision mechanism design, where they are used exclusively in the elastic range.

[0042] With reference to the drawings and the discussion, the width of any feature is defined as its dimension in the circumferential direction of the cylinder. The length of any feature is defined as its dimension in the axial direction of the cylinder. The thickness of any feature is defined as the wall thickness of the cylinder.

[0043] The presence of the ductile hinges **32** allows all of the remaining features in the tissue supporting device to be increased in width or the circumferentially oriented component of their respective rectangular moments of inertia—thus greatly increasing the strength and rigidity of these features. The net result is that elastic, and then plastic deformation commence and propagate in the ductile hinges **32** before other structural elements of the device undergo any significant elastic deformation. The force required to expand the tissue supporting device **20** becomes a function of the geometry of the ductile hinges **32**, rather than the device structure as a whole, and arbitrarily small expansion forces can be specified by changing hinge geometry for virtually any material wall thickness. In particular, wall thicknesses great enough to be visible on a fluoroscope can be chosen for any material of interest.

[0044] In order to get minimum recoil, the ductile hinges **32** should be designed to operate well into the plastic range of the material, and relatively high local strain-curvatures are developed. When these conditions apply, elastic curvature is a very small fraction of plastic or total curvature, and thus when expansion forces are relaxed, the percent change in hinge curvature is very small. When incorporated into a

strut network designed to take maximum advantage of this effect, the elastic springback, or "recoil," of the overall stent structure is minimized.

[0045] In the embodiment of **FIG. 2**, it is desirable to increase the width of the individual struts **28** between the ductile hinges **32** to the maximum width that is geometrically possible for a given diameter and a given number of struts arrayed around that diameter. The only geometric limitation on strut width is the minimum practical width of the slots **22** which is about 0.002 inches (0.0508 mm) for laser machining. Lateral stiffness of the struts **28** increases as the cube of strut width, so that relatively small increases in strut width significantly increase strut stiffness. The net result of inserting ductile hinges **32** and increasing strut width is that the struts **28** no longer act as flexible leaf springs, but act as essentially rigid beams between the ductile hinges. All radial expansion or compression of the cylindrical tissue supporting device **20** is accommodated by mechanical strain in the hinge features **32**, and yield in the hinge commences at very small overall radial expansion or compression.

[0046] Yield in ductile hinges at very low gross radial deflections also provides the superior crimping properties displayed by the ductile hinge-based designs. When a tissue supporting device is crimped onto a folded catheter balloon, very little radial compression of the device is possible since the initial fit between balloon and device is already snug. Most stents simply rebound elastically after such compression, resulting in very low clamping forces and the attendant tendency for the stent to slip on the balloon. Ductile hinges, however, sustain significant plastic deformation even at the low deflections occurring during crimping onto the balloon, and therefore a device employing ductile hinges displays much higher clamping forces. The ductile hinge designs according to the present invention may be securely crimped onto a balloon of a delivery catheter by hand or by machine without the need for auxiliary retaining devices commonly used to hold known stents in place.

[0047] The geometric details of the stress/strain concentration features or ductile hinges **32** can be varied greatly to tailor the exact mechanical expansion properties to those required in a specific application. The most obvious and straightforward ductile hinges are formed by slots or notches with rounded roots, as in **FIGS. 3***a* and **3***c*. Since the laser beams often used to fabricate these features are themselves round, slots or notches with circular roots are also among the easiest to fabricate.

[0048] **FIG. 3***a* shows a ductile hinge **36** formed by a pair of opposed circular grooves **38**, **40**. According to this embodiment the circumferential slot **26** has semicircular ends **38** having a radius of curvature r. Outer semicircular grooves **40** opposed the semicircular ends **38** and also have a radius of curvature r. **FIG. 3***c* shows another ductile hinge **54** formed by a parabolic groove **56**.

[0049] Generally, the ductile hinges **36** of the embodiment of **FIG. 3***a* formed between pairs of concave curves **38**, **40** have a minimum width along a line connecting their respective centers of curvature. When the struts connected by the ductile hinge are moved apart or together, plastic deformation is highly concentrated in a region immediately adjacent to the plane that bisects the hinge at this narrow point.

[0050] For smaller deflection, this very high strain concentration at the bisecting plane is acceptable, and in some cases, useful. For stent crimping purposed, for example, it is desirable to generate relatively large plastic deformations at very small deflection angles.

[0051] As a practical matter, however, strut deflection angles for device expansion are often in the 25° to 45° range. At these angles, strain at the root or bisecting plane of concave ductile hinge features can easily exceed the 50 to 60% elongation-to-failure of 316L stainless steel, one of the most ductile stent materials. Deflection limiting features which will be described further below limit the geometric deflection of struts, but these features do not in themselves affect the propagation pattern of plastic deformation in a given ductile hinge design. For concave ductile hinges at large bend angles, very high strain concentrations remain. Scanning electron micrographs have confirmed this analysis.

[0052] In many engineering applications, it is desirable to limit the amount of strain, or "cold-work," in a material to a specified level in order to optimize material properties and to assure safe operation. For example, in medical applications it is desirable to limit the amount of cold-work in 316L stainless steel to about 30%. At this level, the strength of the material is increased, while the material strain is still well below the failure range. Ideally, therefore, a safe and effective ductile hinge should not simply limit gross deflection, but reliably limit material strain to a specified level.

[0053] **FIG. 3***b* shows a simple ductile hinge design that allows material strain to be limited to some specified level. The ductile hinge of **FIG. 3***b* is formed by a rectangular circumferential groove **46** with filleted corners **48** on one side of a strut, the opposite side **50** of the strut remaining straight. The ductile hinges **44** are substantially rectangular sections between the ends of the groove **46** and the side walls **50**.

[0054] One of the key concepts in **FIG. 3***b* is that the ductile hinge **44** has a constant or substantially constant width along at least a portion of its total length. In this configuration, there is no local minimum width along the ductile hinge axis, as there is with pairs of concave roots. There is therefore no point concentration of stresses and strains along the length of the ductile hinge beam during stent expansion. In particular, maximum tensile and compressive strains will be distributed evenly along the upper and lower surfaces of the hinge **44** during stent expansion. With the gross bend angle limited by mechanical stops, which are described below in detail, the maximum material strain (at the hinge surfaces) can therefore be reliably limited by adjusting the initial length of the ductile hinge over which the total elongation is distributed.

[0055] **FIG. 3***d* shows a ductile hinge **60** in a cylindrical wire **62** for incorporating into a wire-form tissue-supporting device. The ductile hinge **60** is formed by a reduced diameter portion of the wire **62**. Again, it is important that the ductile hinge have a substantially constant width over a portion of its length in order to provide strain control. Preferably, the ductile hinge is prismatic over a portion of its length. Maximum material strain can be varied by adjusting the hinge length. The ductile hinges of the present invention have a constant or substantially constant width over at least ⅓ of the ductile hinge length, and preferably over at least ½ of the ductile hinge length.

[0056] **FIG. 3***e* shows an asymmetric ductile hinge **63** that produces different strain versus deflection-angle functions in

expansion and compression. Each of the ductile hinges **64** is formed between a convex surface **68** and a concave surface **69**. The ductile hinge **64** according to a preferred embodiment essentially takes the form of a small, prismatic curved beam having a substantially constant cross section. However, a thickness of the curved ductile hinge **64** may vary somewhat as long as the ductile hinge width remains constant along a portion of the hinge length. The width of the curved beam is measure along the radius of curvature of the beam. This small curved beam is oriented such that the smaller concave surface **69** is placed in tension in the device crimping direction, while the larger convex surface **68** of the ductile hinges is placed in tension in the device expansion direction. Again, there is no local minimum width of the ductile hinge **64** along the (curved) ductile hinge axis, and no concentration of material strain. During device expansion tensile strain will be distributed along the convex surface **68** of the hinge **64** and maximum expansion will be limited by the angle of the walls of the concave notch **69** which provide a geometric deflection limiting feature. Maximum tensile strain can therefore be reliably limited by adjusting the initial length of the convex arc shaped ductile hinge **64** over which the total elongation is distributed.

[**0057**] The ductile hinges illustrated in **FIGS. 3***a-e* are examples of different structures that will function as a stress/strain concentrator. Many other stress/strain concentrator configurations may also be used as the ductile hinges in the present invention. The ductile hinges according to the present invention generally include an abrupt change in width of a strut that functions to concentrate stresses and strains in the narrower section of the strut. These ductile hinges also generally include features to limit mechanical deflection of attached struts and features to control material strain during large strut deflections. Although the ductile hinges have been illustrated in **FIG. 2** as positioned at the ends of each of the axial slots **22**, they may also be positioned at other locations in other designs without departing from the present invention.

[**0058**] An alternative embodiment of a tissue supporting device **80** is illustrated in **FIG. 4***a* and in the enlarged side view of **FIG. 4***b*. The tissue supporting device **80** includes a plurality of cylindrical tubes **82** connected by S-shaped bridging elements **84**. The bridging elements **84** allow the tissue supporting device to bend axially when passing through the tortuous path of the vasculature to the deployment site and allow the device to bend when necessary to match the curvature of a lumen to be supported. The S-shaped bridging elements **84** provide improved axial flexibility over prior art devices due to the thickness of the elements in the radial direction which allows the width of the elements to be relatively small without sacrificing radial strength. For example, the width of the bridging elements **84** may be about 0.0012-0.0013 inches (0.0305-0.0330 mm). Each of the cylindrical tubes **82** has a plurality of axial slots **86** extending from an end surface of the cylindrical tube toward an opposite end surface. A plurality of axial struts **88** having ductile hinges **90** are formed between the axial slots **86**. The ductile hinges **90** are formed by circumferential slots **92** formed at the interior ends of the axial slots **86** and opposed notches **94**.

[**0059**] The notches **94** each have two opposed angled walls **96** which function as a stop to limit geometric deflection of the ductile hinge, and thus limit maximum device expansion. As the cylindrical tubes **82** are expanded and bending occurs at the ductile hinges **90**, the angled side walls **96** of the notches **94** move toward each other. Once the opposite side walls **96** of a notch come into contact with each other, they resist further expansion of the particular ductile hinge causing further expansion to occur at other sections of the tissue supporting device. This geometric deflection limiting feature is particularly useful where uneven expansion is caused by either variations in the tissue supporting device **80** due to manufacturing tolerances or uneven balloon expansion.

[**0060**] The tissue supporting device **20**, **80** according to the present invention may be formed of any ductile material, such as steel, gold, silver, tantalum, titanium, Nitinol, other shape memory alloys, other metals, or even some plastics. One preferred method for making the tissue supporting device **20**, **80** involves forming a cylindrical tube and then laser cutting the slots **22**, **26**, **86**, **92** and notches **94** into the tube. Alternatively, the tissue supporting device may be formed by electromachining, chemical etching followed by rolling and welding, or any other known method.

[**0061**] The design and analysis of stress/strain concentration for ductile hinges, and stress/strain concentration features in general, is complex. For example, the stress concentration factor for the simplified ductile hinge geometry of **FIG. 3***a* can be calculated and is given by the following expression where D is the width of the struts **28**, h is the height of the circular grooves **38**, **40**, and r is the radius of curvature of the grooves. For purposes of this example the ratio of h/r is taken to be 4. However, other ratios of h/r can also be implemented successfully.

$$K = 4.935 - 7.586\left(\frac{2h}{D}\right) + 0.515\left(\frac{2h}{D}\right)^2 + 0.432\left(\frac{2h}{D}\right)^3$$

[**0062**] The stress concentration factors are generally useful only in the linear elastic range. Stress concentration patterns for a number of other geometries can be determined through photoelastic measurements and other experimental methods. Stent designs based on the use of stress/strain concentration features, or ductile hinges, generally involve more complex hinge geometries and operate in the non-linear elastic and plastic deformation regimes.

[**0063**] The general nature of the relationship among applied forces, material properties, and ductile hinge geometry can be more easily understood through analysis of an idealized hinge **66** as shown in **FIGS. 5***a-c*. The hinge **66** is a simple beam of rectangular cross section having a width h, length L and thickness b. The idealized hinge **66** has elastic-ideally-plastic material properties which are characterized by the ideal stress/strain curve of **FIG. 5***d*. It can be shown that the "plastic" or "ultimate bending moment" for such a beam is given by the expression:

$$M_p \equiv M_{ult} = \delta_{yp}\frac{bh^2}{4}$$

[**0064**] Where b corresponds to the cylindrical tube wall thickness, h is the circumferential width of the ductile hinge,

and δ_{yp} is the yield stress of the hinge material. Assuming only that expansion pressure is proportional to the plastic moment, it can be seen that the required expansion pressure to expand the tissue supporting device increases linearly with wall thickness b and as the square of ductile hinge width h. It is thus possible to compensate for relatively large changes in wall thickness b with relatively small changes in hinge width h. While the above idealized case is only approximate, empirical measurements of expansion forces for different hinge widths in several different ductile hinge geometries have confirmed the general form of this relationship. Accordingly, for different ductile hinge geometries it is possible to increase the thickness of the tissue supporting device to achieve radiopacity while compensating for the increased thickness with a much smaller decrease in hinge width.

[0065] Ideally, the stent wall thickness b should be as thin as possible while still providing good visibility on a fluoroscope. For most stent materials, including stainless steel, this would suggest a thickness of about 0.005-0.007 inches (0.127-0.178 mm) or greater. The inclusion of ductile hinges in a stent design can lower expansion forces/pressures to very low levels for any material thickness of interest. Thus ductile hinges allow the construction of optimal wall thickness tissue supporting devices at expansion force levels significantly lower than current non-visible designs.

[0066] The expansion forces required to expand the tissue supporting device **20** according to the present invention from an initial condition illustrated in **FIG. 2** to an expanded condition is between 1 and 5 atmospheres, preferably between 2 and 3 atmospheres. The expansion may be performed in a known manner, such as by inflation of a balloon or by a mandrel. The tissue supporting device **20** in the expanded condition has a diameter which is preferably up to three times the diameter of the device in the initial unexpanded condition.

[0067] Many tissue supporting devices fashioned from cylindrical tubes comprise networks of long, narrow, prismatic beams of essentially rectangular cross section as shown in **FIG. 6**. These beams which make up the known tissue supporting devices may be straight or curved, depending on the particular design. Known expandable tissue supporting devices have a typical wall thickness b of 0.0025 inches (0.0635 mm), and a typical strut width h of 0.005 to 0.006 inches (0.127-0.1524 mm). The ratio of b:h for most known designs is 1:2 or lower. As b decreases and as the beam length L increases, the beam is increasingly likely to respond to an applied bending moment M by buckling, and many designs of the prior art have displayed this behavior. This can be seen in the following expression for the "critical buckling moment" for the beam of **FIG. 6**.

$$M_{crit} = \frac{\pi b^3 h \sqrt{EG(1 - 0.63b/h)}}{6L}$$

[0068] Where:

[0069] E=Modulus of Elasticity

[0070] G=Shear Modulus

[0071] By contrast, in a ductile hinge based design according to the present invention, only the hinge itself deforms during expansion. The typical ductile hinge **32** is not a long narrow beam as are the struts in the known stents. Wall thickness of the present invention may be increased to 0.005 inches (0.127 mm) or greater, while hinge width is typically 0.002-0.003 inches (0.0508-0.0762 mm), preferably 0.0025 inches (0.0635 mm) or less. Typical hinge length, at 0.002 to 0.005 inches (0.0508-0.0127 mm), is more than an order of magnitude less than typical strut length. Thus, the ratio of b:h in a typical ductile hinge **32** is 2:1 or greater. This is an inherently stable ratio, meaning that the plastic moment for such a ductile hinge beam is much lower than the critical buckling moment Merit, and the ductile hinge beam deforms through normal strain-curvature. Ductile hinges **32** are thus not vulnerable to buckling when subjected to bending moments during expansion of the tissue supporting device **20**.

[0072] To provide optimal recoil and crush-strength properties, it is desirable to design the ductile hinges so that relatively large strains, and thus large curvatures, are imparted to the hinge during expansion of the tissue supporting device. Curvature is defined as the reciprocal of the radius of curvature of the neutral axis of a beam in pure bending. A larger curvature during expansion results in the elastic curvature of the hinge being a small fraction of the total hinge curvature. Thus, the gross elastic recoil of the tissue supporting device is a small fraction of the total change in circumference. It is generally possible to do this because common stent materials, such as 316L Stainless Steel have very large elongations-to-failure (i.e., they are very ductile).

[0073] It is not practical to derive exact expressions for residual curvatures for complex hinge geometries and real materials (i.e., materials with non-idealized stress/strain curves). The general nature of residual curvatures and recoil of a ductile hinge may be understood by examining the moment-curvature relationship for the elastic-ideally-plastic rectangular hinge **66** shown in **FIGS. 5***a-c*. It may be shown that the relationship between the applied moment and the resulting beam curvature is:

$$M = M_p\left[1 - \frac{1}{3}\left(\frac{y_o}{h/2}\right)^2\right] = \frac{3}{2}M_{yp}\left[1 - \frac{1}{3}\left(\frac{\kappa_{yp}}{\kappa}\right)^2\right]$$

[0074] This function is plotted in **FIG. 7**. It may be seen in this plot that the applied moment M asymptotically approaches a limiting value M_p, called the plastic or ultimate moment. Beyond $^{11}/_{12}$ M_p large plastic deformations occur with little additional increase in applied moment. When the applied moment is removed, the beam rebounds elastically along a line such as a-b. Thus, the elastic portion of the total curvature approaches a limit of ½ the curvature at the yield point. These relations may be expressed as follows:

$$M_p = \frac{3}{2}M_{yp} \Rightarrow \kappa_{rebound} = \frac{3}{2}\kappa_{yp}$$

[0075] Imparting additional curvature in the plastic zone cannot further increase the elastic curvature, but will decrease the ratio of elastic to plastic curvature. Thus,

additional curvature or larger expansion of the tissue supporting device will reduce the percentage recoil of the overall stent structure.

[0076] As shown in **FIG. 8**, when a rigid strut **28** is linked to the ductile hinge **66** described above, the strut **28** forms an angle θ with the horizontal that is a function of hinge curvature. A change in hinge curvature results in a corresponding change in this angle θ. The angular elastic rebound of the hinge is the change in angle Δθ that results from the rebound in elastic curvature described above, and thus angular rebound also approaches a limiting value as plastic deformation proceeds. The following expression gives the limiting value of angular elastic rebound for the idealized hinge of **FIG. 8**.

$$\theta_{rebound} = 3\epsilon_{yp}\frac{L}{h}$$

[0077] Where strain at the yield point is an independent material property (yield stress divided by elastic modulus); L is the length of the ductile hinge; and h is the width of the hinge. For non-idealized ductile hinges made of real materials, the constant 3 in the above expression is replaced by a slowly rising function of total strain, but the effect of geometry would remain the same. Specifically, the elastic rebound angle of a ductile hinge decreases as the hinge width h increases, and increases as the hinge length L increases. To minimize recoil, therefore, hinge width h should be increased and length L should be decreased.

[0078] Ductile hinge width h will generally be determined by expansion force criteria, so it is important to reduce hinge length to a practical minimum in order to minimize elastic rebound. Empirical data on recoil for ductile hinges of different lengths show significantly lower recoil for shorter hinge lengths, in good agreement with the above analysis.

[0079] The ductile hinges **32** of the tissue supporting device **20** provide a second important advantage in minimizing device recoil. The embodiment of **FIG. 2** shows a network of struts joined together through ductile hinges to form a cylinder. In this design, the struts **28** are initially parallel to an axis of the device. As the device is expanded, curvature is imparted to the hinges **32**, and the struts **28** assume an angle θ with respect to their original orientation, as shown in **FIG. 8**. The total circumferential expansion of the tissue supporting device structure is a function of hinge curvature (strut angle) and strut length. Moreover, the incremental contribution to stent expansion (or recoil) for an individual strut depends on the instantaneous strut angle. Specifically, for an incremental change in strut angle Δθ, the incremental change in circumference ΔC will depend on the strut length R and the cosine of the strut angle θ.

$$\Delta C = R\Delta\theta \cos\theta$$

[0080] Since elastic rebound of hinge curvature is nearly constant at any gross curvature, the net contribution to circumferential recoil ΔC is lower at higher strut angles θ. The final device circumference is usually specified as some fixed value, so decreasing overall strut length can increase the final strut angle θ. Total stent recoil can thus be minimized with ductile hinges by using shorter struts and higher hinge curvatures when expanded.

[0081] Empirical measurements have shown that tissue supporting device designs based on ductile hinges, such as the embodiment of **FIG. 2**, display superior resistance to compressive forces once expanded despite their very low expansion force. This asymmetry between compressive and expansion forces may be due to a combination of factors including the geometry of the ductile hinge, the increased wall thickness, and increased work hardening due to higher strain levels.

[0082] According to one example of the tissue supporting device of the invention, the device can be expanded by application of an internal pressure of about 2 atmospheres or less, and once expanded to a diameter between 2 and 3 times the initial diameter can withstand a compressive force of about 16 to 20 gm/mm or greater. Examples of typical compression force values for prior art devices are 3.8 to 4.0 gm/mm.

[0083] While both recoil and crush strength properties of tissue supporting devices can be improved by use of ductile hinges with large curvatures in the expanded configuration, care must be taken not to exceed an acceptable maximum strain level for the material being used. For the ductile hinge **44** of **FIG. 3*b***, for example, it may be shown that the maximum material strain for a given bend angle is given by the expression:

$$\varepsilon_{\max} = \frac{h}{L}\frac{\theta}{2}$$

[0084] Where ϵ_{max} is maximum strain, h is ductile hinge width, L is ductile hinge length and θ is bend angle in radians. When strain, hinge width and bend angle are determined through other criteria, this expression can be evaluated to determine the correct ductile hinge length L.

[0085] For example, suppose the ductile hinge **44** of **FIG. 3*b*** was to be fabricated of 316L stainless steel with a maximum strain of 30%; ductile hinge width h is set at 0.0025 inch (0.0635 mm) by expansion force criteria; and the bend angle θ is mechanically limited to 0.5 radians (≅30%) at full stent expansion. Solving the above expression for L gives the required ductile hinge length of at least about 0.0033 inches (0.0838 mm).

[0086] Similar expressions may be developed to determine required lengths for more complicated ductile hinge geometries, such as shown in **FIG. 3*e***. Typical values for the prismatic portions of these curved ductile hinges range from about 0.002 to about 0.0035 inches (0.051-0.089 mm) in hinge width and about 0.002 to about 0.006 inches (0.051-0.152 mm) in hinge length. The tissue supporting device design of **FIGS. 4*a*** and **4*b*** include a stop which limits the maximum geometric deflection at the ductile hinges by the design of the angled walls **96** of the notches **94**.

[0087] In many designs of the prior art, circumferential expansion was accompanied by a significant contraction of the axial length of the stent which may be up to 15% of the initial device length. Excessive axial contraction can cause a number of problems in device deployment and performance including difficulty in proper placement and tissue damage. Designs based on ductile hinges **32** can minimize the axial contraction, or foreshortening, of a tissue supporting device during expansion as follows.

[0088] **FIGS. 9***a* and **9***b* illustrate an exaggerated ductile hinge **32** and shortened struts **28** in initial and expanded conditions. Each strut **28** is attached to two ductile hinges **32** at opposite ends. Each ductile hinge **32** has an instant center of rotation C_1, C_2 that is an effective pivot point for the attached strut **28**. Initially, during expansion the pivot point C_1 is displaced vertically by a distance d until C_1 is positioned even with C_2 as shown in **FIG. 9***b*. When the array is expanded vertically, the axial struts **28** move in a circular arc with respect to the pivot points, as shown in **FIG. 9***b*. It can be seen that the horizontal distance e between pivot points C_1 and C_2 actually increases initially, reaching a maximum e_{max} when the two points are on the same horizontal axis as shown in **FIG. 9***b*. As the vertical expansion continues, the device compresses axially back to its original length. Only when vertical expansion of the array continues beyond the point where the horizontal distance e between C_1 and C_2 is the same as the original horizontal distance e does the overall length of the array actually begin to contract. For the stent shown in **FIG. 2**, for example, approximately ⅓ of the total circumferential expansion has been accomplished by the time the configuration of **FIG. 9***b* is reached, and the stent exhibits very low axial contraction.

[0089] This ability to control axial contraction based on hinge and strut design provides great design flexibility when using ductile hinges. For example, a stent could be designed with zero axial contraction.

[0090] An alternative embodiment that illustrates the trade off between crush strength and axial contraction is shown in **FIG. 10**. **FIG. 10** shows a portion of a tissue supporting device **70** having an array of struts **72** and ductile hinges **74** in the unexpanded state. The struts **72** are positioned initially at an angle θ_1 with respect to a longitudinal axis X of the device. As the device is expanded radially from the unexpanded state illustrated in **FIG. 10**, the angle θ_1 increases. In this case the device contracts axially from the onset of vertical expansion throughout the expansion. Once the device has been completely expanded the final angle θ_1 made by the strut **72** with the horizontal will be much greater than the angle θ in the device of **FIGS. 8***a* and **8***b*. As shown previously, a higher final strut angle θ_1, can significantly increase crush strength and decrease circumferential recoil of the stent structure. However, there is a trade off between increased crush strength and increase in axial contraction.

[0091] According to one example of the present invention, the struts **72** are positioned initially at an angle of about 0° to 45° with respect to a longitudinal axis of the device. As the device is expanded radially from the unexpanded state illustrated in **FIG. 10***a*, the strut angle increases to about 20° to 80°.

[0092] According to one alternative embodiment of the present invention, the expandable tissue supporting device can also be used as a delivery device for certain beneficial agents including drugs, chemotherapy, or other agents. Due to the structure of the tissue supporting device incorporating ductile hinges, the widths of the struts can be substantially larger than the struts of the prior art devices. The struts due to their large size can be used for beneficial agent delivery by providing beneficial agent on the struts or within the struts. Examples of beneficial agent delivery mechanisms include coatings on the struts, such as polymer coatings containing beneficial agents, laser drilled holes in the struts containing beneficial agent, and the like.

[0093] While the invention has been described in detail with reference to the preferred embodiments thereof, it will be apparent to one skilled in the art that various changes and modifications can be made and equivalents employed, without departing from the present invention.

What is claimed is:

1. An expandable medical device comprising:

a plurality of elongated beams, the plurality of elongated beams joined together to form a substantially cylindrical device which is expandable from a cylinder having a first diameter to a cylinder having a second diameter, the plurality of elongated beams each having a beam width in a circumferential direction; and

a plurality of ductile hinges connecting the plurality of beams together in the substantially cylindrical device, the ductile hinges having a substantially constant width in a circumferential dimension along a portion of a hinge length which is at least ⅓ a total hinge length, wherein the hinge width is smaller than the beam width such that as the device is expanded from the first diameter to the second diameter the ductile hinges experience plastic deformation while the beams are not plastically deformed.

2. The expandable medical device according to claim 1, further comprising an abrupt transition between each of the elongated beams and each of the ductile hinges.

3. The expandable medical device according to claim 1, further comprising a plurality of axial slots between adjacent elongated beams and a plurality of circumferential slots, wherein the plurality of ductile hinges are each formed between an axial slot and a circumferential slot.

4. The expandable medical device according to claim 3, wherein the ductile hinges are formed at opposite ends of the circumferential slots.

5. The expandable medical device according to claim 1, wherein the ductile hinges are each in the shape of a curved prismatic beam.

6. The expandable medical device according to claim 5, wherein the curved prismatic beams are positioned such that during stent expansion, tensile strain is distributed along a convex surface of the curved prismatic beam.

7. The expandable medical device according to claim 1, wherein the plurality of elongated beams are formed of wire and the plurality of ductile hinges are reduced diameter portions of the wire.

8. The expandable medical device according to claim 1, wherein expansion of the substantially cylindrical device from the first diameter to the second diameter which is at least two times the first diameter results in substantially no axial contraction.

9. The expandable medical device according the claim 1, further comprising a geometric deflection limiting feature for limiting an amount of bending of the ductile hinges.

10. The expandable medical device according to claim 9, wherein the geometric deflection limiting feature is a V-shaped notch having side surfaces which contact each other when a maximum amount of bending is reached.

11. The expandable medical device according to claim 1, wherein the plurality of elongated beams extend substantially axially and a plurality of circumferential beams are each connected at first and second ends to one of the axial beams by a ductile hinge.

12. An expandable medical device comprising:

a cylindrical tube;

a plurality of axial slots formed in the cylindrical tube in a staggered arrangement to define a network of elongated struts, wherein each of the elongated struts are axially displaced from adjacent struts; and

a plurality of ductile hinges formed between the elongated struts, the ductile hinges allowing the cylindrical tube to be expanded or compressed from a first diameter to a second diameter by deformation of the ductile hinges, the ductile hinges being asymmetrically configured to reach a predetermined strain level upon a first percentage expansion and to reach the predetermined strain level upon a second percentage of compression, wherein the first percentage is larger than the second percentage.

13. The expandable medical device according to claim 12, wherein the elongated struts have a substantially constant width in a circumferential direction, and the ductile hinges have a width in the circumferential direction which is less than ⅔ the width of the struts.

14. The expandable medical device according to claim 13, wherein a transition between the cross sectional area of the struts and the cross sectional area of the ductile hinges is an abrupt transition which extends less than 10 percent of a length of a strut.

15. The expandable medical device according to claim 12, wherein the plurality of ductile hinges are curved prismatic beams having a convex side surface and a concave side surface.

16. The expandable medical device according to claim 12, wherein a ratio of a length of the ductile hinges to a length of the axial struts is 1:6 or less.

17. The expandable medical device according to claim 12, further comprising a geometric deflection limiting feature for limiting an amount of bending of the ductile hinges.

18. The expandable medical device according to claim 12, wherein the ductile hinges are designed to deform plastically upon radial expansion or compression of the expandable medical device while the elongated struts experience no plastic deformation upon radial expansion or compression.

19. The expandable medical device according to claim 12, wherein the expandable medical device is formed of Nitinol, and the ductile hinges are designed to deform upon radial expansion or compression of the expandable medical device and can be returned to an original configuration by heating.

20. The expandable medical device according to claim 12, wherein the elongated struts include a beneficial agent for delivery to a patient.

21. An expandable medical device comprising:

a plurality of elongated beams having a substantially constant beam cross sectional area along a beam length;

a plurality of ductile hinges connecting the plurality of beams together in a substantially cylindrical device which is expandable or compressible from a first diameter to a second diameter by plastic deformation of the ductile hinges; and

a plurality of deflection limiting members positioned at a plurality of the ductile hinges to limit the deflection at the ductile hinges.

22. The expandable medical device according to claim 21, wherein the deflection limiting members include angled side walls on opposite sides of a ductile hinge which engage one another to limit deflection at ductile hinge.

23. The expandable medical device according to claim 22, wherein the deflection limiting members are V-shaped notches.

24. An expandable medical device which is visible in x-ray and fluoroscope images, the device comprising:

a plurality of struts arranged to form an expandable cylindrical tube; and

a plurality of ductile hinges connecting the plurality of struts, wherein the struts and ductile hinges have a thickness in a radial direction of the cylindrical tube of at least 0.003 inches (0.0762 mm).

25. The expandable medical device according to claim 24, wherein the device is formed of stainless steel.

26. The expandable medical device according to claim 24, wherein the thickness of the struts and ductile hinges is at least 0.005 inches (0.127 mm).

* * * * *