Oct. 12, 1948. J. L. BRANDENBURG 2,451,193

PORTABLE AIR CLEARING FAN

Filed June 21, 1945

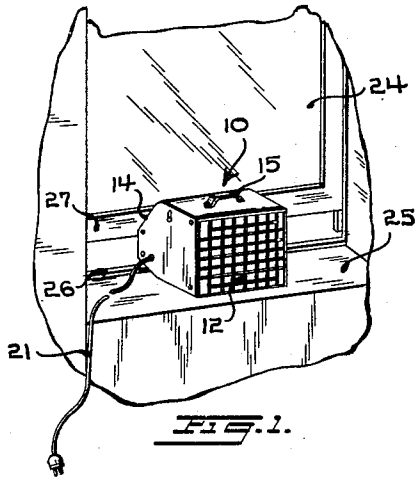

FIG. 1.

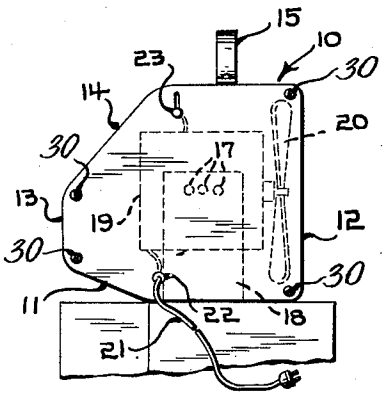

FIG. 2.

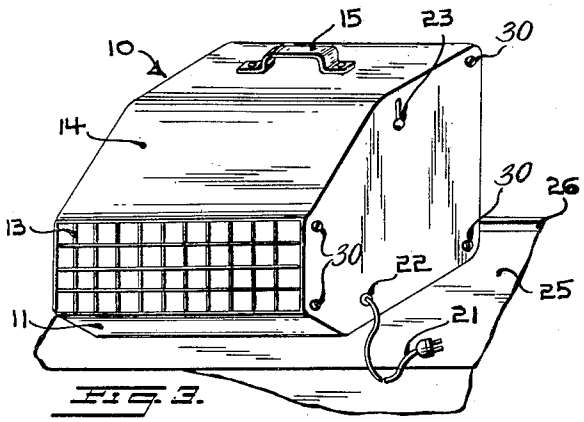

FIG. 3.

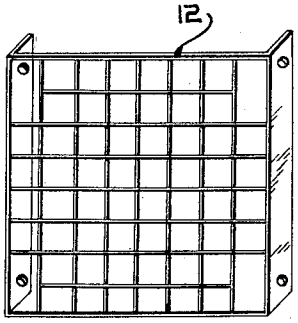

FIG. 4.

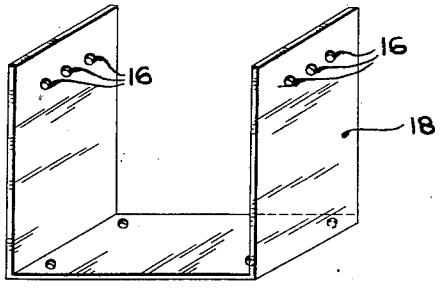

FIG. 5.

INVENTOR
JOSEPH L. BRANDENBURG
BY
ATTORNEY

Patented Oct. 12, 1948 2,451,193

UNITED STATES PATENT OFFICE

2,451,193

PORTABLE AIR CLEARING FAN

Joseph L. Brandenburg, Brooklyn, N. Y.

Application June 21, 1945, Serial No. 600,816

1 Claim. (Cl. 98—94)

1

This invention relates to apparatus useful in regulating air flow. While not limited thereto, it has particlar relation to a small portable air clearing unit which is economical and easy to handle.

The product of this invention is of particular value in clearing the air in the rooms of living quarters. It is of special benefit when used in metropolitan kitchens where excess heat, smoke, and odors exist requiring thorough ventilation of the rooms.

The device is simple in operation comprising merely one switch for its control, yet may easily be used for a variety of purposes and permits ready reversion of air flow on the window sill, either exhausting used up inside air or drawing fresh outside air forcefully into the room.

In spite of its many advantages, the device is small in size, relatively light weight, easily fitting and may readily be used on a variety of window sills where many rooms are in need of alternate airing.

For further comprehension of the invention, and of the objects and advantages thereof, reference will be had to the following description and accompanying drawings, and to the appended claim in which the various novel features of the invention are more particularly set forth.

In the accompanying drawing forming a material part of this disclosure:

Fig. 1 is a perspective frontal view of the improved air clearing unit.

Fig. 2 is an end elevational view of the device.

Fig. 3 is a perspective view taken from the side opposite from the side from where Fig. 1 has been viewed showing the device in use during air intake operation.

Fig. 4 is a perspective detail showing the main or intake screen apart from the entire device.

Fig. 5 is a perspective view of the motor support also removed and apart from the main device.

In the device made in accordance with the instant invention, a rectangularly cross sectional frame 10, is provided having a portion 11 of the bottom wall slanting upwardly and rearwardly so as to extend over a portion of a window stool 26 and has at its front and back openings, two open screens 12 and 13, respectively, keeping large and damaging objects from the interior of the frame 10, yet freely admitting air.

In a preferred form of the invention back screen 13 is bordered on its lower side by the above mentioned slanting portion 11, and on its upper extremity by another upper slanting portion 14 in turn bordering the top wall of frame 10 which may conveniently be provided with a carrying handle 15 for use where transportability of the device is desired. A flat bottom wall located between the lower slanting portion 11 and frontal screen 12 completes the outer frame 10 and provides full enclosure of the inside structure with the exception of the screened intakes 12 and 13. It is very convenient to make the screens 12 and 13 readily removable by holding them normally in fixed position by means of holes 16 in the outer frame structure into which fit supporting screws 30 attached to said screens 12 and 13. Inside the enclosed frame 10 a U-shaped symmetrically located support 18 centrally resting upon the flat bottom wall of frame 10 tightly fits a compact electric motor 19 which may be of the Robbins-Myer type and should provide high R. P. M. The motor 19 should be securely held by means of another set of screws 17 and corresponding holes 16 in the U-shaped support 18. It supports in turn an inductor type fan 20 having propeller shaped blades located near the front intake screen 12. The electric motor 19 is connected to a convenient power source by means of cord 21 piercing one wall of the frame through gasket 22 preventing loss of driven air through that point. An off and on switch 23, located near the top of the outside frame 10 conveniently on one of the side walls, is also connected to the motor 19 by means of an electric cord 21.

2

In actual operation the power driven fan 20 operates near a large air intake 12 grasping air and pushing it around motor 19 which it thereby air-cools toward the funnel-shaped back structure of the enclosed frame 10 formed by the two converging slanting portions 11 and 14 which direct and concentrate the air blasts toward back screen 13. It will be readily understood that a conventional air filter may easily be inserted near screen 12 or screen 13 so as to increase the purity of the air where desired.

In one preferred mode of operation illustrated in Fig. 1, the air-clearing device is placed in front of a window 24 fitting with its flat bottom member upon window sill 25 with its lower slanting portion 11 extending over the window stool 26 and having its open back screen 13 touch the window sash 27 and closing a window opening between the sash 27 and the stool 26. It is of course well understood that the air cleaning unit is built compactly enough so as not to occupy the entire window sill 25 leaving considerable space for objects placed thereon and for ready grasping and handling.

In the above position the unit is ready to grasp inside air through frontal screen 12 and to force-

fully eject this stale air through the window opening into the outside atmosphere.

On the other hand, the device may readily be reversed as shown in Fig. 3 forcefully taking in the air from the outside atmosphere through screen 13 and forcefully ejecting said air into the room confronting frontal screen 12.

A compact, adaptable and portable, easily operable air clearing unit can thus be made in accordance with the invention permitting ready and forceful direction of air flow as desired.

While I have illustrated and described the preferred embodiments of my invention, it is to be understood that I do not limit myself to the precise constructions herein disclosed and the right is reserved to all changes and modifications coming within the scope of the invention as defined in the appended claim.

Having thus described my invention, what I claim as new, and desire to secure by United States Letters Patent is:

In an air clearing fan having a casing rectangular in cross-section and formed with open ends closed by screens and a motor driven fan disposed centrally within said casing for drawing air into the casing through one screen and exhausting the air through the other screen, said casing having its rear portion tapered to extend over the outer portion of a window stool when said casing is rested on a window sill, means securely supporting the motor of the motor driven fan in the casing with the least resistance to the movement of air through the casing by the support, comprising a U-shaped frame having its intermediate arm securely attached to the bottom

wall of the casing, said frame having its side arms extended vertically and spaced a distance equal to the width of the motor to extend along diametrically opposite sides of the motor, said side arms having their top ends formed with lines of openings, and screws passing through said openings and threadedly engaging complementary threaded openings in the sides of the motor securely mounting the motor on the top ends of said side arms, said side arms being relatively thin and having their widths extended parallel to the path of travel of the air through the casing.

JOSEPH L. BRANDENBURG.

REFERENCES CITED

The following references are of record in the file of this patent:

UNITED STATES PATENTS

Number	Name	Date
929,767	Hubbard	Aug. 3, 1909
1,018,543	Abtmeyer	Feb. 27, 1912
1,028,221	Keith	June 4, 1912
1,329,816	Winslow	Feb. 3, 1920
2,008,965	Miller	July 23, 1935
2,010,808	Braine	Aug. 13, 1935
2,036,851	Chittenden	Apr. 7, 1936
2,048,911	Zimmerman	July 28, 1936
2,051,613	Macleod	Aug. 18, 1936
2,268,801	Carlton	Jan. 6, 1942
2,275,564	Shawhan et al.	Mar. 10, 1942
2,355,469	Robertson	Aug. 8, 1944
2,380,586	Essick	July 31, 1945