(12) INTERNATIONAL APPLICATION PUBLISHED UNDER THE PATENT COOPERATION TREATY (PCT)

(19) World Intellectual Property Organization
International Bureau

(43) International Publication Date
14 August 2014 (14.08.2014)

WIPO | PCT

(10) International Publication Number
WO 2014/121330 A1

(51) International Patent Classification:
C25D 21/04 (2006.01) *C25C 7/00* (2006.01)

(21) International Application Number:
PCT/AU2014/000088

(22) International Filing Date:
6 February 2014 (06.02.2014)

(25) Filing Language: English

(26) Publication Language: English

(30) Priority Data:
2013900376 6 February 2013 (06.02.2013) AU

(71) Applicant: **HATCH ASSOCIATES PTY LTD** [AU/AU]; The Hatch Building, 144 Stirling Street, Perth, Western Australia 6000 (AU).

(72) Inventors; and
(71) Applicants : **FRASER, Robert John** [AU/AU]; 36 Morley St, Toowong, Queensland 4066 (AU). **JOHNSTON, Timothy George** [CA/AU]; 117 Madsen St, Keprra, Queensland 4054 (AU). **ROBINSON, Douglas John** [US/US]; 24413 S Lakeway Circle SW, Sun Lakes, Arizona 85248 (US). **WHITE, Mathew George** [AU/AU]; 380A Upper Brookfield Rd, Upper Brookfield, Queensland 4069 (AU).

(74) Agent: **WRAYS**; 56 Ord Street, West Perth, Western Australia 6005 (AU).

(81) Designated States *(unless otherwise indicated, for every kind of national protection available)*: AE, AG, AL, AM, AO, AT, AU, AZ, BA, BB, BG, BH, BN, BR, BW, BY, BZ, CA, CH, CL, CN, CO, CR, CU, CZ, DE, DK, DM, DO, DZ, EC, EE, EG, ES, FI, GB, GD, GE, GH, GM, GT, HN, HR, HU, ID, IL, IN, IR, IS, JP, KE, KG, KN, KP, KR, KZ, LA, LC, LK, LR, LS, LT, LU, LY, MA, MD, ME, MG, MK, MN, MW, MX, MY, MZ, NA, NG, NI, NO, NZ, OM, PA, PE, PG, PH, PL, PT, QA, RO, RS, RU, RW, SA, SC, SD, SE, SG, SK, SL, SM, ST, SV, SY, TH, TJ, TM, TN, TR, TT, TZ, UA, UG, US, UZ, VC, VN, ZA, ZM, ZW.

(84) Designated States *(unless otherwise indicated, for every kind of regional protection available)*: ARIPO (BW, GH, GM, KE, LR, LS, MW, MZ, NA, RW, SD, SL, SZ, TZ, UG, ZM, ZW), Eurasian (AM, AZ, BY, KG, KZ, RU, TJ, TM), European (AL, AT, BE, BG, CH, CY, CZ, DE, DK, EE, ES, FI, FR, GB, GR, HR, HU, IE, IS, IT, LT, LU, LV, MC, MK, MT, NL, NO, PL, PT, RO, RS, SE, SI, SK, SM, TR), OAPI (BF, BJ, CF, CG, CI, CM, GA, GN, GQ, GW, KM, ML, MR, NE, SN, TD, TG).

Published:
— *with international search report (Art. 21(3))*

(54) Title: ACID MIST CONTROL APPARATUS

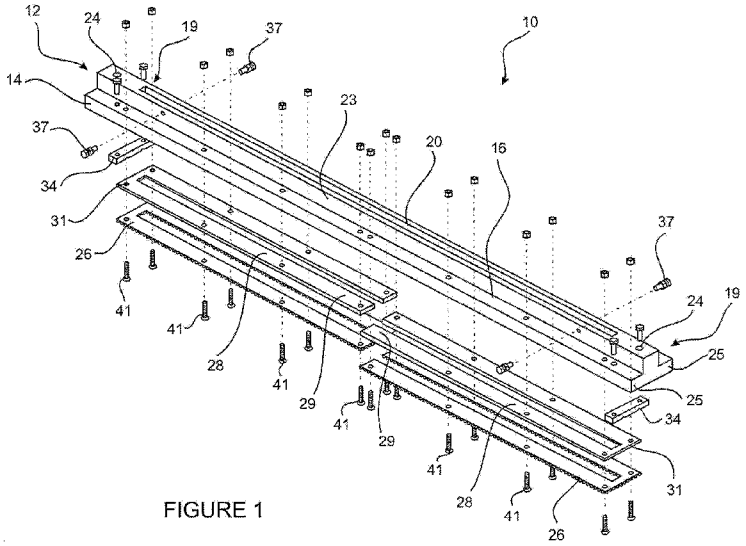

FIGURE 1

(57) Abstract: An acid mist control apparatus (10) for the control of acid mist emissions in an electrolytic cell, the apparatus comprising: an elongate hood (12) having longitudinal edges (14), an upper surface (16) and a lower surface (18); and a receiving aperture (20), wherein the receiving aperture (20) is adapted to receive therethrough an anode (22) of an electrolytic cell.

WO 2014/121330 A1

"Acid Mist Control Apparatus"

TECHNICAL FIELD

[0001] The present invention relates to an acid mist control apparatus. More particularly, the acid mist control apparatus of the present invention is intended for use with electrolytic cells used in electrowinning.

BACKGROUND ART

[0002] The following discussion of the background art is intended to facilitate an understanding of the present invention only. The discussion is not an acknowledgement or admission that any of the material referred to is or was part of the common general knowledge as at the priority date of the application.

[0003] During the electrowinning step of certain metallurgical processes, gas is formed at the anode of the electrolytic cell, the bubbles of gas then rise to the surface of the acidic electrolyte. The bubbles generated are up to 100 micron in diameter. When the bubbles reach the surface they burst (pop). As the bubbles burst they generate an aerosol of acidic electrolyte droplets or particles which become suspended in air, thus generating acid mist.

[0004] There are two main mechanisms of acid mist production, aerosol produced by the breaking of the bubble's film and a secondary release caused by the collapsing of the bubble void, also known as "jetting". Once the mist is formed, the aerosol particles are sufficiently small that they move easily within the atmosphere, making the particles very difficult to remove from the air stream without significantly increasing their velocity, and passing them through a mist eliminator.

[0005] The presence of fine aerosols of acid in the air presents a significant health risk for workers and is clearly a potential environmental hazard. Additionally, the highly acidic environment causes significant corrosion to plant equipment and structures.

[0006] In an effort to overcome the problems and risks associated with the formation of acid mist from electrolytic cells, a number of prior art methods have been utilised.

[0007] One such prior art method is the addition of an appropriate surfactant to the electrolytic cells in order to reduce the surface tension and change the energy released on bubble bursting or to form a foam layer across the surface of the electrolyte that acts

as a barrier to the mist. However, the use of a surfactant is only able to reduce the acid mist emissions by approximately 70%. The addition of a surfactant to the electrolytic cell may also result in additional problems such as a reduction in the quality of the deposit and a reduction in current efficiency. Additionally, when the cathode is removed from the cell, it becomes coated with the surfactant material, and may require additional cleaning.

[0008] Currently, it is standard practice to reduce acid mist emissions through the use of small floating hollow or low density solids, such as polypropylene balls or beads. Such solids float on the free surface of the electrolyte and reduce the available area in which bubbles may burst and provide surfaces with which emitted acid mist droplets can collide. Through this method it has been demonstrated that acid mist emissions may be reduced by up to 80%. However, due to the small size of the floating solids they are known to interfere with the cathode deposit near the solution line and to get caught in the deposit. They are also known to spread throughout the tank house creating a hazardous and generally messy environment.

[0009] A further current and widely accepted form of controlling acid mist is through the use of high energy close capture systems or hoods. These systems comprise covers on every cell, fan systems to provide suction, as well as large scrubbing systems. Due to the size of these covers they often require a crane in order to be removed from the cells. These systems are not only very expensive to purchase and install, but have high ongoing operating costs. As a result of their design they have also been known to create an envelope of highly acidic aerosol around the header bars, accelerating corrosion around the header bars, and again increasing operating costs.

[0010] Another common prior art method of acid mist control includes the use of cross-flow ventilation systems. In such systems, large fans are located on the outside of the tank house in order to draw air in through one side of the building, across the tank house, and out the other side. Due to the size of the fan units that are required there is a substantial increase in noise within the tank house. Again, there are high capital and operating costs associated with this method.

[0011] In an attempt to overcome the high operating costs of the various prior art methods, Van Dusen et. al. developed an "electrocap" system "Van Dusen J. and Smith J. W. (1988) *Evaluation of the performance of electrocaps under simulated industrial conditions.* CIM Bulletin 81 (914), 82-82". This device is are fitted to the anode and

forms a seal across to the cathode face. Their design relies on the channelling of acid mist once it is formed rather than attempting to reduce the initial formation of the acid mist. However, it has been found that the wiper that extends across the electrolyte to the cathode is not sufficiently rigid to support its shape and has also been found to become embedded in the deposit of the cathode.

[0012] The present invention seeks to overcome, or at least ameliorate, one or more of the deficiencies of the prior art mentioned above, or to provide the consumer with a useful or commercial choice.

[0013] Each document, reference, patent application or patent cited in this text is expressly incorporated herein in their entirety by reference, which means that it should be read and considered by the reader as part of this text. That the document, reference, patent application or patent cited in this text is not repeated in this text is merely for reasons of brevity.

[0014] Throughout the specification, unless the context requires otherwise, the word "comprise" or variations such as "comprises" or "comprising", will be understood to imply the inclusion of a stated integer or group of integers but not the exclusion of any other integer or group of integers.

SUMMARY OF INVENTION

[0015] In accordance with the present invention there is provided an acid mist control apparatus for the control of acid mist emissions in an electrolytic cell, the apparatus comprising:

an elongate hood having longitudinal edges, an upper surface and a lower surface; and

a receiving aperture provided in the elongate hood,

wherein the receiving aperture is adapted to receive therethrough an anode of an electrolytic cell.

[0016] Preferably, the apparatus of the present invention further comprises:

Elongate flanges that depend from the elongate hood.

[0017] Still preferably, the elongate flanges depend from the longitudinal edge of the elongate hood.

[0018] In one form of the present invention the apparatus further comprises:

One or more exit ports.

[0019] More preferably, the apparatus comprises two exit ports, one port being located at each opposing longitudinal end of the elongate hood. Still preferably, the exit ports are conical in shape such that any acid solution which contacts the one or more exit port's surface will be directed into the electrolytic solution.

[0020] In one form of the present invention there is provided at the exit ports additional acid mist control means in order to reduce the acid mist generated out the exit ports. Preferably, the additional acid mist control means is selected from a group comprising filters, exhaust systems, baffles or water spray scrubbers.

[0021] In one form of the present invention the lower surface of the elongate hood is substantially flat.

[0022] In one form of the present invention the lower surface of the elongate hood is adapted to receive one or more inserts which aid in the control and mitigation of the acid mist formation and to direct any resulting acid mist from the electrolytic cell by way of the exit ports. Preferably, the inserts are adapted to extend along substantially the full length of the elongate hood and to substantially surround the aperture.

[0023] In one form of the present invention the one or more inserts may be selected from a group comprising featured inserts and tapered inserts.

[0024] Preferably, a lower surface of the featured inserts may include one or more of imprinted patterns, channels, dams or other obstacles which act to channel, guide, or dam the generated gas bubbles prior to them breaking at the surface of the electrolytic solution. More preferably, the features of the lower surface further act to coalesce gas bubbles generated within the electrolytic cell to form larger bubbles. More preferably, the features of the lower surface of the elongate hood further act to coalesce gas bubbles to a size of at least 5mm. Without being bound by theory, it is understood that when the larger gas bubbles break the surface of the electrolyte solution, they do so with less energy, reducing the amount of mist generated by the breaking film and largely

preventing the 'jetting effect' from occurring. The removal of the jetting effect significantly reduces the amount of acid mist generated.

[0025] Preferably, the tapered inserts are thicker towards the centre of the elongate hood and thinner towards the opposing longitudinal ends of the elongate hood, such that the bubbles contact an angled surface which acts to direct the bubbles towards the exit ports. Still preferably, the tapered inserts are adapted so that they may be angled towards the centre of the elongate hood, in order to further promote coalescence.

[0026] In one form of the present invention, the apparatus of the present invention further comprises:

one or more weirs.

[0027] More preferably, the apparatus comprises two weirs, one weir being located at each opposing longitudinal end of the elongate hood, immediately adjacent to the location of the exit ports. Without being limited by theory, it is understood that by providing a barrier that bubbles of a certain size may pass over, the weirs will further act to coalesce the bubbles moving towards the exit ports. Still preferably, the weirs may be shaped in order to further direct the bubbles towards the exit ports.

[0028] Advantageously, any number of the featured inserts, tapered inserts and weirs may be used coincidently in order to control and mitigate the acid mist formation.

[0029] In one form of the present invention, the elongate hood is secured with respect to the anode by a fastening means. Still preferably, the hood is secured with respect to the anode by way of bolts that pass through the anode.

[0030] In one form of the present invention, the elongate hood is constructed of rubber or plastic. Still preferably, the elongate hood is constructed of Hypalon ®.

[0031] It will be appreciated that where the elongate hood is constructed of rubber, it may be adapted to be stretched over the anode, the elastic properties of the rubber acting to retain the hood in place. At such times the receiving aperture is sized slightly smaller than the size of the anode in order to facilitate the stretching of the hood over the anode.

[0032] When the hood is constructed of plastic or similar materials, it will be appreciated that the hood may comprise two or more body sections which clip together around the

anode. In such an arrangement, the size of the receiving aperture may also be adjustable.

[0033] Preferably, the elongate hood is shaped so that it may be fitted to standard anodes without the need for further modification.

[0034] In one form of the invention, additional objects may be added to the electrolytic cell in order to cover the free surface of the electrolyte and reduce the area for bubbles to burst. Preferably, polypropylene balls are added to the surface.

[0035] The apparatus of the present invention is envisaged to be suitable for electrolytic processes such as electrowinning processes, which include but are not limited to, processes for the recovery of lead, copper, gold, silver, zinc, chromium, cobalt, nickel, manganese and iron.

[0036] In accordance with the present invention there is provided a method for the control of acid mist emissions in an electrolytic cell, the method comprising the steps of:

securing the acid mist control apparatus of the present invention described hereinabove to an anode of an electrolytic cell; and

operating the electrolytic cell,

wherein gas bubbles that evolve at the anode impact on the hood resulting in the coalescing of the bubbles thereagainst, and/or any generated acidic aerosols also impact on the hood, each thereby substantially preventing the production of acid mist.

[0037] When the lower surface of the side projections of the elongate hood is substantially flat:

the acid mist control apparatus will preferably be positioned above the electrolyte solution.

[0038] When the lower surface of the elongate hood further comprises a number of features:

the acid mist control apparatus will preferably be positioned so as to be either partially or fully immersed in the electrolyte solution.

[0039] In one form of the present invention, the acid mist control apparatus is secured over the anode by a fastening means. Still preferably, the hood is secured over the anode by way of screws.

[0040] In one form of the present invention, additional objects may be added to the electrolytic cell in order to cover the free surface of the electrolyte and reduce the area for bubbles to burst. Preferably, polyurethane balls are added to the surface.

[0041] The method of the present invention is envisaged to be suitable for electrolytic processes such as electrowinning processes, which include but are not limited to, processes for the recovery of lead, copper, gold, silver, zinc, chromium, cobalt, nickel, manganese and iron.

BRIEF DESCRIPTION OF THE DRAWINGS

[0042] Further features of the present invention are more fully described in the following description of several non-limiting embodiments thereof. This description is included solely for the purposes of exemplifying the present invention. It should not be understood as a restriction on the broad summary, disclosure or description of the invention as set out above. The description will be made with reference to the accompanying drawings, in which: -

Figure 1 is an exploded upper perspective view of the acid mist control apparatus of the present invention;

Figure 2 is a side view cross section of the acid mist control apparatus of Figure 1;

Figures 3(a), 3(b), and 3(c) are a series of underside views of the featured inserts of the present invention, each showing a different feature that may be utilised on the lower surface thereof;

Figure 4 is an upper perspective view of the insert of the present invention showing the taper along the length thereof;

Figures 5(a), 5(b), and 5(c) are a series of upper perspective views of several weirs that may be used with the present invention;

Figure 6 is a cross section of the hood of the present invention comprising both a pitched insert and a featured insert;

Figure 7 is an end elevation view of the apparatus of the present invention in use within an electrolytic cell;

Figure 8 is a graph of the H_2SO_4 mass per assay for the NN arrangement tests;

Figure 9 is a graph of the H_2SO_4 mass per assay for the NNN arrangement;

Figure 10 shows the comparison of the NNN, NN and NB results for the filter and tube data; and

Figure 11 is a plot of the acid mist concentration in the cell for different prototype arrangements, considering both the filter and tube.

DESCRIPTION OF EMBODIMENTS

[0043] In Figures 1 to 6 there is shown an acid mist control apparatus 10 in accordance with the present invention. The acid mist control apparatus 10 comprises an elongate hood 12 having longitudinal edges 14, an upper surface 16 and a lower surface 18 and opposing longitudinal ends 19. A receiving aperture 20 is provided in, and extends along, the elongate hood 12 in a longitudinal direction. The receiving aperture 20 is substantially rectangular in shape whereby an anode 22 of an electrolytic cell may be received therethrough. On the upper surface 16 of the elongate hood 12 an upstanding support collar 23 surrounds the aperture 20 in order to provide additional surface are for the apparatus 10 to fix onto the anode 22.

[0044] At each opposing longitudinal end 19 of the elongate hood 12 there is provided an exit port 24. As best seen in Figure 2, the exit ports 24 are conical in shape such that any acid solution that contacts the surface of the exit port 24 will be directed downwardly into the electrolytic solution.

[0045] Elongate flanges 25 depend from the longitudinal edges 14 of the elongate hood 12 and run the length of the elongate hood 12. The elongate flanges 25 depend substantially perpendicular to the elongate hood 12.

[0046] The lower surface 18 of the elongate hood 12 adapted to receive one or more insert, such as for example, textured or featured inserts 26 and pitched inserts 28 which aid in the control and mitigation of acid mist formation and to direct any resulting acid mist from the electrolytic cell by way of the exit ports 24. As best shown in Figures 2 to 4, the inserts 26, 28 may be provided in two separate halves that are adapted to

combine to run the length of the elongate hood 12 and surround the aperture 24. The inserts 26, 28 may either have a featured surface and/or be tapered. As best shown in Figures 3(a), 3(b), and 3(c), the featured inserts 26 may incorporate a wide range of shapes or textures such as vanes 28, converging dams 30 or dimples 32. As best shown in Figure 4, each the pitched inserts 28 are thicker towards an inner end 29 and thinner towards an outer end 31, such that the bubbles contact an angled surface which acts to direct the bubbles towards the exit ports 24.

[0047] At opposing longitudinal ends 19 of the elongate hood, immediately prior to the location of the exit ports 24, the underside 18 is adapted to receive a weir 34. The weirs 34 provide a barrier over which bubbles only of a certain size may pass. In this manner, the weirs 34 further act to coalesce the bubbles moving towards the exit ports 24. As best shown in Figure 5, the weirs 34 may include a number of channels 35 in various orientations in order to further direct the bubbles towards the exit ports 24. These include a single exit channel weir 36, an inner dual channel exit weir 38 and an outer dual channel exit weir 40.

[0048] The weirs 34 and the inserts 26, 28 are fastened to the elongate body 12 by way of a number of screws 41.

[0049] In use, as shown in Figures 6 and 7, the acid mist control apparatus 10 of the present invention is intended to be utilised in an electrolytic cell 42. The hood 12 is placed over or around an anode 22 of the electrolytic cell 42 and is arranged to be positioned at least partially in or above the level of an electrolyte solution 44 provided therein.

[0050] The elongate hood 12 is secured over the anode 22 by one or more fastening means, for example bolts 37.

[0051] As shown in Figure 7, when the lower surface 18 of the elongate hood 12 further comprises one or more inserts, the apparatus 10 will be positioned so as to be either partially or fully immersed in the electrolyte solution 44. With this orientation, the majority of the anode gas bubbles are forced to coalesce on the lower surface 18 of the one or more inserts as they move along to the exit ports 24 where the larger bubbles will be released. It will be appreciated that some bubbles may burst through the solution layer and impact onto the lower surface, again dripping back down into the electrolytic solution 44.

[0052] When the lower surface 18 of the elongate hood 12 does not include any inserts, the hood 10 is positioned above the electrolyte 44 solution.

[0053] During operation of the electrolytic cell 42 gas is formed at the anode 22 of the electrolytic cell 42, the bubbles of gas then rise to the surface of the electrolyte solution 44.

[0054] As the bubbles break on the surface of the electrolyte solution 44, acidic aerosols are fired off at a high velocity. The apparatus 10 of the present invention has been designed to take advantage of this by providing a surface for the bubbles to impact on, minimising the formation of acidic aerosols. Once the bubbles have impacted on the surface, the acidic electrolyte will drip back into the electrolytic solution 44 and the remaining anode gas will leave the electrolytic cells by way of the exit ports 24.

[0055] When the lower surface 18 of the elongate hood 12 further comprises one or more inserts, the apparatus 10 will be positioned so as to be either partially or fully immersed in the electrolyte solution 44. With this orientation, the majority of the anode gas bubbles are forced to coalesce on the lower surface 18 of the one or more inserts as they move or float along to the exit ports 24 where the larger bubbles will be released. It will be appreciated that some bubbles may burst through the solution layer and the acid aerosol generated impacts on the lower surface 18, again dripping back down into the electrolytic solution 44.

[0056] The acid mist control apparatus 10 may be constructed of either a rubber, such as of Hypalon®, or plastic material. As would be understood by those skilled in the art Hypalon® is a chlorosulfonated polyethylene synthetic rubber. When the elongate hood 12 is constructed of a rubber material, it may be adapted to be stretched over the anode 22, the elastic properties of the rubber acting to retain the elongate hood 12 in place. At such times the receiving aperture 20 is sized slightly smaller than the size of the anode 22 in order to facilitate the stretching of the elongate hood 12 over the anode 22.

[0057] When the elongate hood 12 is constructed of plastic or similar materials, it will be appreciated that the elongate hood may comprise two or more body sections (not shown) which clip or bolt together around the anode 22. In such an arrangement the size of the receiving aperture 20 may also be adjustable.

[0058] The following examples serves to more fully describe the manner of using the above-described invention, as well as to set forth the best modes contemplated for

carrying out various aspects of the invention. It is understood that this example in no way serves to limit the true scope of this invention, but rather is presented for illustrative purposes.

Example 1

[0059] A number of experiments have been undertaken in order to evaluate the effect the apparatus and method of the present invention have on the acid mist generated from a copper electrowinning cell. The experiments had the objectives of:

1. Comparing the quantity of acid mist generated from a copper electrowinning cell with no method of suppressing acid mist against cells operating with the various apparatus of the present invention;

2. Comparing the quantity of acid mist generated from a copper electrowinning cell with polyurethane balls on the surface of the electrolyte against cells operating with the various apparatus of the present invention;

3. Comparing the quantity of acid mist generated from a copper electrowinning cell with a surfactant (3M™ Acid Mist Suppressant FC1100™) in the electrolyte against a cell operating with polyurethane balls and the various apparatus of the present invention; and

4. Determining which of the various lower surface arrangements of the hood is the most effective at reducing acid mist emissions.

Experimental Conditions

[0060] The following table summarizes the input data and required level of acid mist and hydrogen for safety:

Table 1: Input data and safe acid mist and hydrogen levels

Parameter	Units	Value
Number of anodes	-	**1**
Number of cathodes	-	**2**
Electrolyte flow rate	m^3/hr	**0.12**
Spent electrolyte flow rate	m^3/hr	**0.0173**
Rich electrolyte flow rate	m^3/hr	**0.0173**
Copper bite across the cell	g/L	**5**
Operating temperature	°C	**45**
Air flow velocity	m/s	**20**
Inlet air temperature	°C	**Ambient**

Current density	A/m^2	**300**
Total current per electrode	A	**591**
Electrolyte composition	g/L	**Cu: 40** **H_2SO_4: 180**
Target current efficiency	**%**	**98**

Hood Design

[0061] In order to test the efficiency of each of the various hoods designs the following tests were undertaken:

Table 2: Tests Undertaken

Test Name	**Hatch AeroSolution**			**Other Acid Mist Suppressant**
	Bottom surface	**Texture**	**Weir**	
NNN	No prototype			No
NN	No prototype			Balls on outside
NB	No prototype			Balls on whole surface
FS1	Flat	Smooth	#1	Balls on outside
FS2	Flat	Smooth	#2	Balls on outside
FS3	Flat	Smooth	#3	Balls on outside
FD1	Flat	Dimpled	#1	Balls on outside
FD2	Flat	Dimpled	#2	Balls on outside
FD3	Flat	Dimpled	#3	Balls on outside
SS1	Sloped STS	Smooth	#1	Balls on outside
SS2	Sloped STS	Smooth	#2	Balls on outside
SS3	Sloped STS	Smooth	#3	Balls on outside
SD1	Sloped STS	Dimpled	#1	Balls on outside
SD2	Sloped STS	Dimpled	#2	Balls on outside
SD3	Sloped STS	Dimpled	#3	Balls on outside
BS1	Sloped FTB	Smooth	#1	Balls on outside
BS2	Sloped FTB	Smooth	#2	Balls on outside
BS3	Sloped FTB	Smooth	#3	Balls on outside
BD1	Sloped FTB	Dimpled	#1	Balls on outside
BD2	Sloped FTB	Dimpled	#2	Balls on outside
BD3	Sloped FTB	Dimpled	#3	Balls on outside
NBX	No prototype			20ppm FC1100
BS3X	Best performing prototype			20ppm FC1100

Note:

STS: Side-to-side

FTB: Front-to-back

Weir #1 profile: single exit channel

Weir #2 profile: single exit channels on each side of cathode plate in the centre

Weir #3 profile: two exit channels on each extreme edge of the hood

Air sampling procedure

[0062] The apparatus required to measure the amount of acid mist produced are:

- An air rotameter to measure the flow rate of air pumped for analysis.
- An air sampling pump (SKC Inc. AirChek XR5000™) that will pump the air and acid mist from the solution to the filter.
- An acid mist filter made of polypropylene, 0.45 µm pore size, and 47 mm in diameter.
- An open-faced filter holder, polypropylene, 47 mm in diameter.
- Silicon tubing for connection of pump to filter and filter to rotameter.
- Sample bags to hold the samples.

Test Observations

[0063] The observations of the different tests are summarised in the table below.

Table 3: Observations of acid mist of different tests

Test	Observations
NN	Fine bubbles generated on the anode and move towards the cathodes while moving upwards; Fine bubbles burst on electrolyte surface and emit a smoke-like mist. Bigger bubbles of 2mm in diameter frequently rise to electrolyte surface and burst about 15 seconds after they have reached the surface.
FS2	Tiny bubbles burst in between prototype and cathodes but no visible mist; bigger bubbles of about 3mm in diameter form in between prototype and cathodes, bursting 10 seconds after formation. Bigger bubbles form frequently.
FD3	Fine bubbles burst on electrolyte surface in between prototype and cathodes without visible acid mist. Bigger bubbles of diameter 2-5mm form on electrolyte surface in between prototype and cathodes at a low frequency continuously. Smoke-like acid mist continuously emitted from holes on the prototype.
FD1	Fine bubbles burst on electrolyte surface in between anode and cathodes, emitting thin acid mist. No visible big bubbles, but a smoke-like acid mist bursting from the prototype holes periodically, in a frequency of 3 times every 2 seconds.

FD2	Fine bubbles burst on electrolyte surface in between anode and cathodes, emitting a thin acid mist. Few big bubbles spotted, but one reaching electrolyte surface they burst immediately. Thick smoke-like acid mist emitted periodically from holes on prototype.
SS3	Fine bubbles bursting on electrolyte surface in gap between prototype and cathodes, giving off a thin mist; big bubbles of 1-3mm in diameter frequently appearing and bursting at the edges of prototype; smoke-like mist emitted from prototype holes periodically.
BS3	Fine bubbles between prototype and cathodes but no visible acid mist; few large bubbles in gap; continuous smoke-like mist from prototype holes.
BD3	Fine bubbles bursting in between anode and cathodes, emitting a thin mist; long-lasting big bubbles of 2-3mm in diameter; smoke-like mist emitted from prototype holes periodically.
BS3X	A very small amount of fine bubbles was observed in between anode and cathodes. No large plooms of acid mist were seen. A small amount of smoke-like mist was emitted from prototype holes periodically.

[0064] The general occurrence with all tests was that a fizzing was observed in between the anode and cathodes. This fizzing that is observed can be explained by the bursting of tiny bubbles at the electrolyte surface which is the cause of the acid mist. The large bubbles observed in some of the tests may be the result of the formation of smaller bubbles into a larger bubble. The smoke-like mist emerging from the prototype holes in some of the tests is acid mist caused by the collection of fine bubbles at the ends of the prototype. This suggests that the design may be further enhanced to capture the acid mist at the ends of the apparatus, provide additional coalescence means or channel the mist back to the solution level.

Variance Testing

[0065] Figure 8 displays graphically the results of a variance test run for the NN arrangement five times for 20 minutes each, all performed on one day. As seen in Figure 8, the variance test displays linearity, with an average of 0.074mg and a standard deviation of 0.0038mg. These results indicate that the tests will be repeatable.

Time Base Interval Test

[0066] Figure 9 displays the results of the time base interval test run for the NNN arrangement for 5, 10, 20 and 60 minutes performed on one day. The graph shows that as sampling time increases, the amount of acid collected on the filter increases. From 20 to 60 minutes, the amount of acid increases by approximately 3.0 times, whereas from 20 to 5 minutes, the amount of acid increases by 5.4 times when it should be 4

times only. This suggests that longer sampling times produce more accurate results. The inaccuracies associated with the lower sampling times may be a result of the samples being too close to the detection limit of the ICP analyser or other factors.

Comparison of NNN, NN and NB

[0067] Figure 10 shows the comparison of the NNN, NN and NB results for the filter and tube data. As seen in Figure 9, the error bar for NNN is very large. Only two tests were run for this arrangement, so the average of the two points was used. The error for the NN and NB arrangements was small compared to NNN. These results show that placing balls on the outside only reduces acid mist levels by about 2.6 times, and placing balls everywhere compared to just on the outside reduces acid mist levels by 2.3 times.

Prolonged Tests

[0068] In order to compare tests that were run on the same time basis, the 60 minute runs for NB and the prototype arrangements will be analysed. Figure 11 shows the average acid mist concentration for these different arrangements when both the filter and sample tube were considered.

[0069] As seen in Figure 11, it is difficult to distinguish the best performing prototype. The prototype with the lowest average acid mist is BS3, while the worst performing prototype is clearly FS3. The graph shows that the performance of the prototype is very similar to with balls. The differences cannot be distinguished as the width of the error bars are too large to compare intricately.

[0070] As seen by the above data, the addition of the hood of the present invention to a copper electrowinning cells substantially reduces the amount of acid mist formed. The best performing prototype is BS3, based on the average acid mist concentration, but it could be SS3 or SD3 as the error bars for these prototypes overlap, as seen in Figure 8. The worst performing prototype is FS3. It is difficult to conclude whether BS3 is more effective than NB, as the results are similar and their error bars overlap. Figures 8, 9 and 11 show that the results are repeatable, but the accuracy decreases as sampling time decreases due to the lower detection limit of the ICP being approached.

[0071] It is envisaged that rather than include separate featured and tapered inserts, the underside of the elongate body may be moulded to include a featured and/or tapered surface.

[0072] Modifications and variations such as would be apparent to the skilled addressee are considered to fall within the scope of the present invention. For example, it is envisaged that the hood of the present invention may be utilised in combination with other previous apparatus for control of acid mist, such as mist eliminators or anode bags or skirts, without departing from the spirit and scope of the present invention.

[0073] At times when the acid mist control apparatus of the present invention is used in conjunction with a mist eliminator, exit ports are not required.

[0074] When the hood of the present invention is used in conjunction with an anode skirt, the skirt is positioned such that it extends from the edges of the hood. In this case, the top section of the skirt from the hood down to below the electrolyte level may be sealed against liquid or gas flow such that gas generated at the anode is directed into the hood. In such an orientation exit ports may be used or the gas may be allowed to flow out through the skirt below the electrolyte level.

CLAIMS

1. An acid mist control apparatus for the control of acid mist emissions in an electrolytic cell, the apparatus comprising:

   an elongate hood having longitudinal edges, an upper surface and a lower surface; and

   a receiving aperture provided in the elongate hood,

   wherein the receiving aperture is adapted to receive therethrough an anode of an electrolytic cell.

2. An acid mist control apparatus according to claim 1, wherein the apparatus further comprises:

   Elongate flanges that depend from the elongate hood.

3. An acid mist control apparatus according to claim 2, wherein the elongate flanges depend from the longitudinal edge of the elongate hood.

4. An acid mist control apparatus according to any one of the preceding claims, wherein the apparatus of the present invention further comprises:

   One or more exit ports.

5. An acid mist control apparatus according to claim 4, wherein the apparatus comprises two exit ports located at opposing longitudinal ends of the elongate hood.

6. An acid mist control apparatus according to claim 4 or 5, wherein the one or more exit ports are conical in shape.

7. An acid mist control apparatus according to any one of claims 4 to 6, wherein at the exit ports there is provided additional acid mist control means in order to reduce the acid mist generated out the exit ports.

8. An acid mist control apparatus according to claim 7, wherein the additional acid mist control means is selected from a group comprising filters, exhaust systems, baffles or water spray scrubbers.

9. An acid mist control apparatus according to any one of the preceding claims, wherein the lower surface of the elongate hood is substantially flat.

10. An acid mist control apparatus according to any one of the preceding claims, wherein the lower surface of the elongate hood is adapted to receive one or more inserts.

11. An acid mist control apparatus according to claim 11, wherein the inserts are adapted to extend along substantially the full length of the elongate hood and surround the aperture.

12. An acid mist control apparatus according to claim 10 or 11, wherein the one or more inserts may be selected from a group comprising featured inserts and tapered inserts.

13. An acid mist control apparatus according to claim 12, wherein the lower surface of the featured inserts may include one or more of imprinted patterns, channels, dams or other obstacles which act to channel and dam the generated gas bubbles prior to them breaking at the surface of the electrolytic solution.

14. An acid mist control apparatus according to claim 13, wherein the features of the lower surface further act to coalesce gas bubbles generated within the electrolytic cell to form larger bubbles.

15. An acid mist control apparatus according to claim 13 or 14, wherein the features of the lower surface of the elongate hood further acts to coalesce gas bubbles to a size of at least 5mm.

16. An acid mist control apparatus according to claim 12, wherein the tapered inserts are thicker towards the centre of the elongate hood and thinner towards the opposing longitudinal ends of the elongate hood.

17. An acid mist control apparatus according to claim 16, wherein the tapered inserts are adapted so that they may be angled towards the centre of the elongate hood.

18. An acid mist control apparatus according to any one of the preceding claims, wherein the apparatus of the present invention further comprises:

one or more weirs.

19. An acid mist control apparatus according to claim 18, wherein the apparatus comprises two weirs located at opposing longitudinal ends of the elongate hood, immediately adjacent to the location of the exit ports.

20. An acid mist control apparatus according to claim 19, wherein the weirs are shaped in order to further direct the bubbles towards the exit ports.

21. An acid mist control apparatus according to any one of the preceding claims, wherein the elongate hood is secured over the anode by a fastening means.

22. An acid mist control apparatus according to claim 21, wherein the hood is secured over the anode by way of bolts that pass through the anode.

23. An acid mist control apparatus according to any one of the preceding claims, wherein the elongate hood is constructed of rubber or plastic.

24. A method for the control of acid mist emissions in an electrolytic cell, the method comprising the steps of:

securing the acid mist control apparatus of the present invention described hereinabove to an anode of an electrolytic cell; and

operating the electrolytic cell,

wherein gas bubbles that evolve at the anode impact on the hood resulting in the coalescing of the bubbles thereagainst, and/or any generated acidic aerosols also impact on the hood, each thereby substantially preventing the production of acid mist.

25. A method according to claim 24, wherein the acid mist control apparatus is positioned above the electrolyte solution, when the lower surface of the side projections of the elongate hood is substantially flat.

26. A method according to claim 24, wherein the acid mist control apparatus is positioned so as to be either partially or fully immersed in the electrolyte solution, when the lower surface of the elongate hood further comprises a number of features.

27. A method according to anyone of claims 24 to 26, wherein the acid mist control apparatus is secured over the anode by a fastening means.

28. A method according to claim 27, wherein the hood is secured over the anode by way of screws.

29. A method according to any one of claims 24 to 28, wherein additional objects may be added to the electrolytic cell in order to cover the free surface of the electrolyte and reduce the area for bubbles to burst.

30. A method according to claim 29, wherein polyurethane balls are added to the surface.

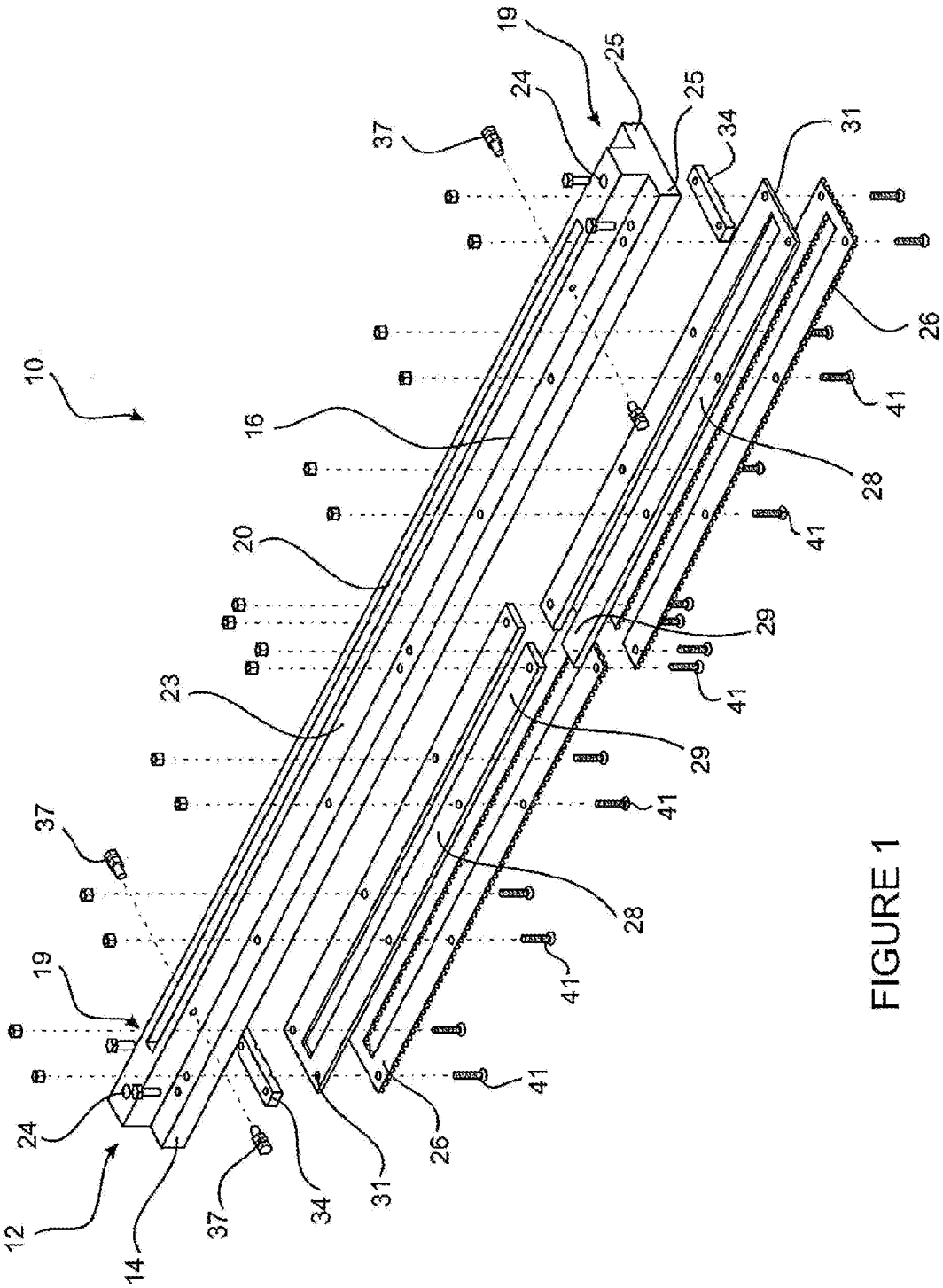

FIGURE 1

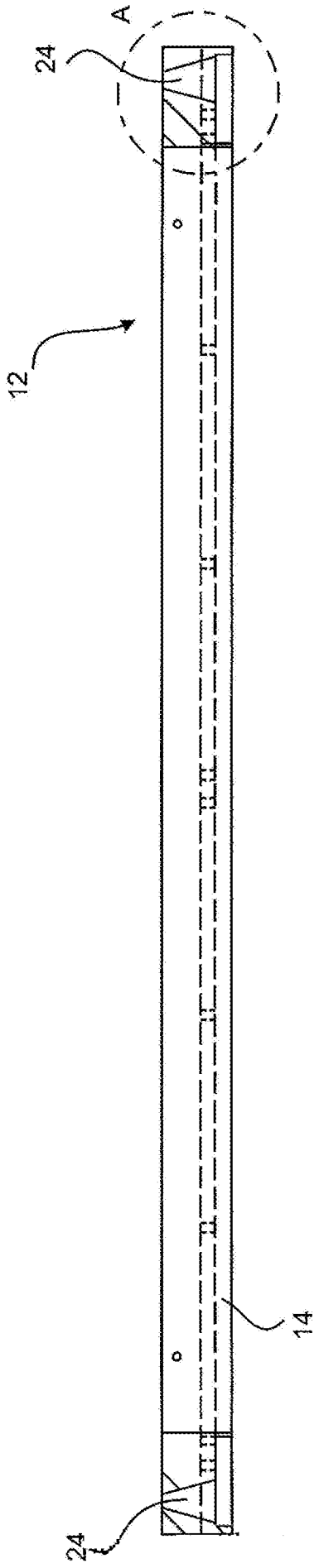

FIGURE 2

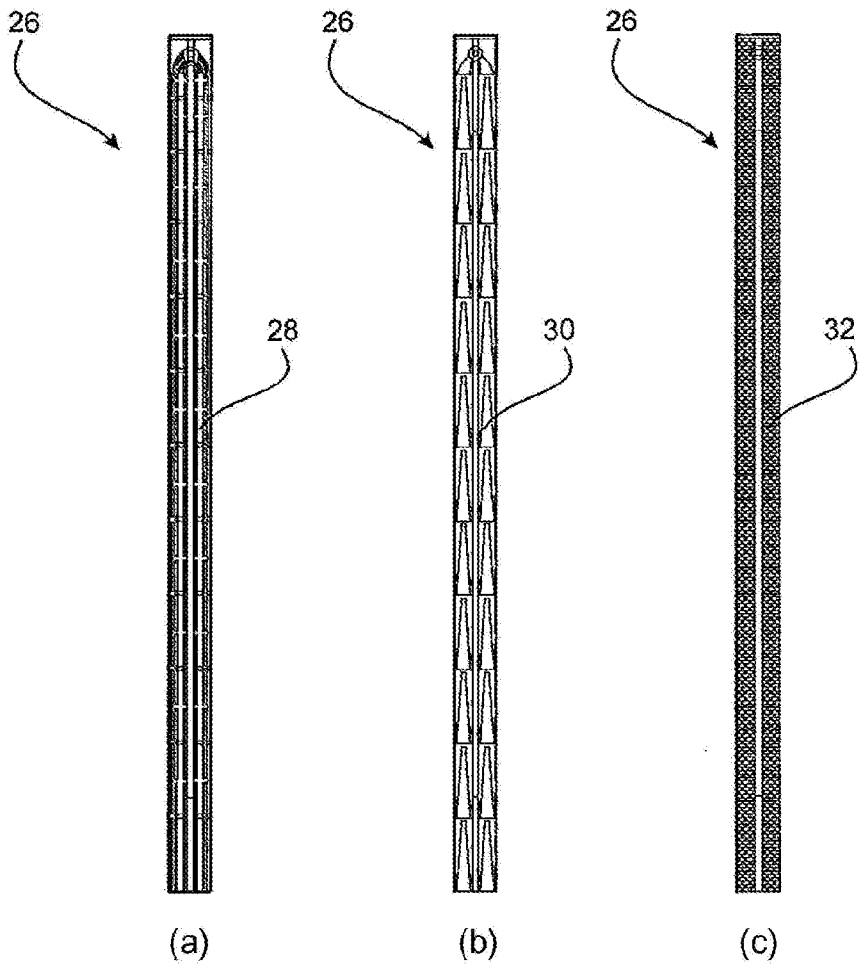

FIGURE 3

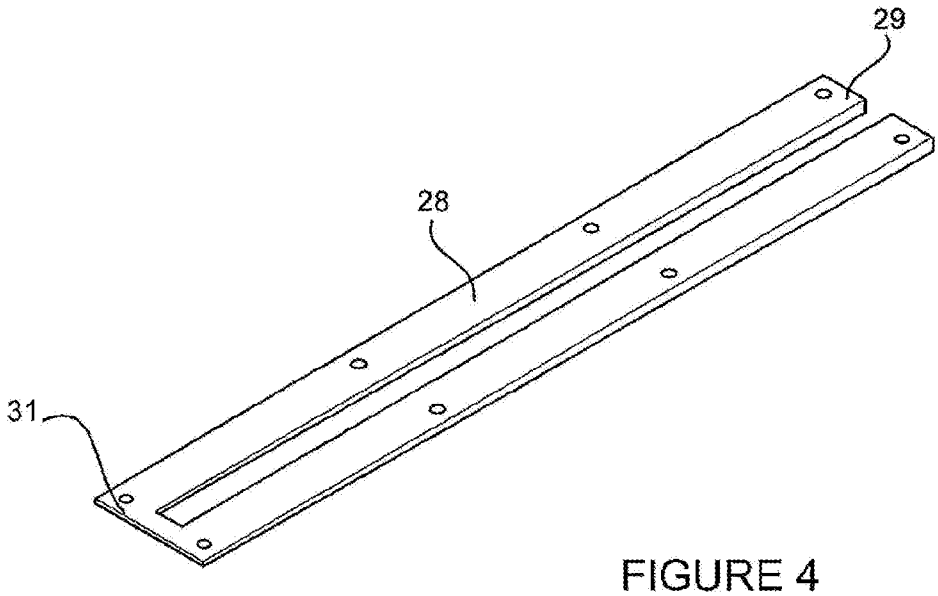

FIGURE 4

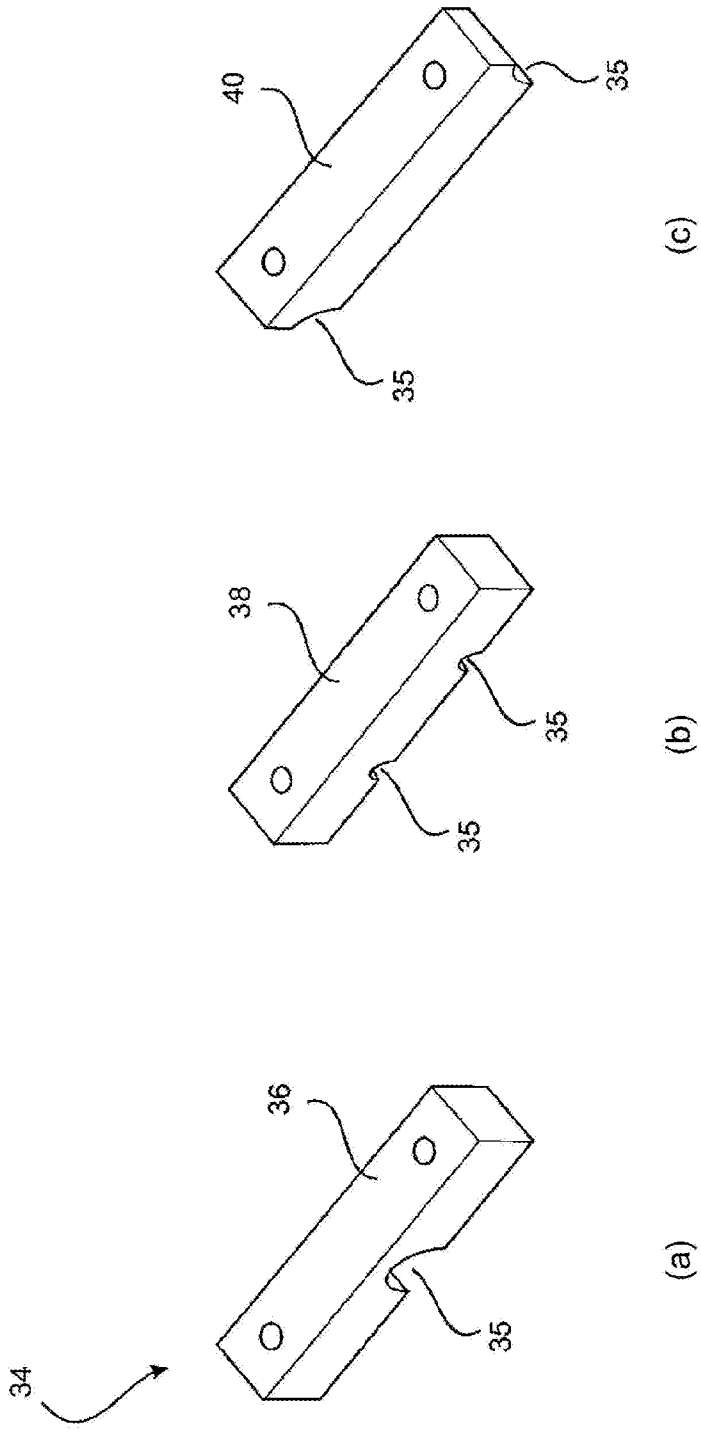

FIGURE 5

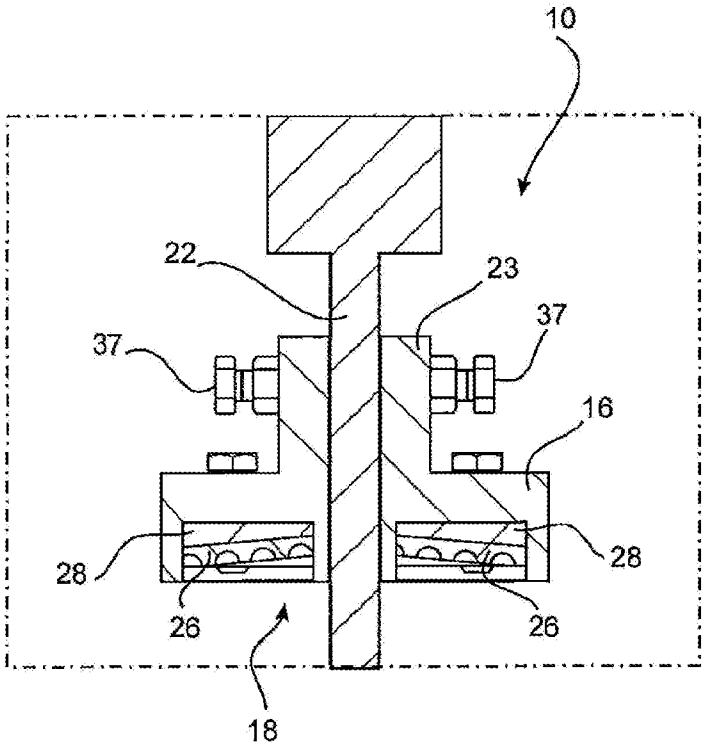

FIGURE 6

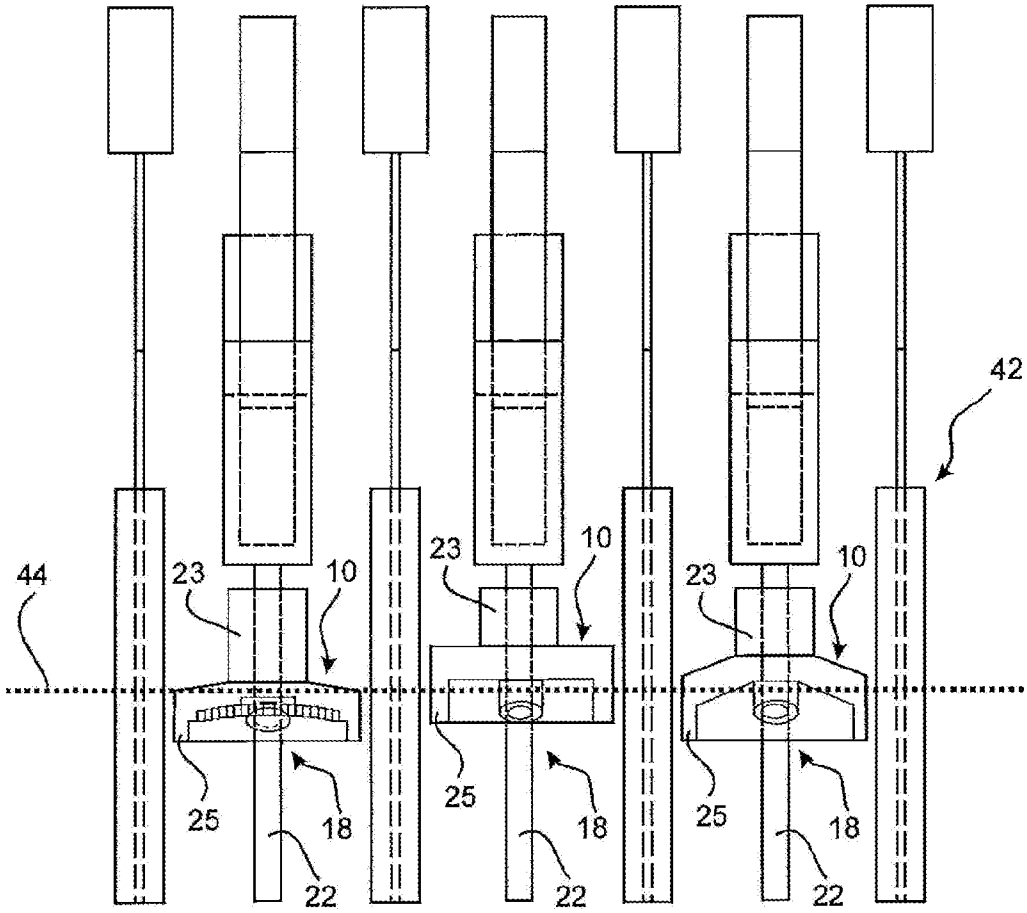

FIGURE 7

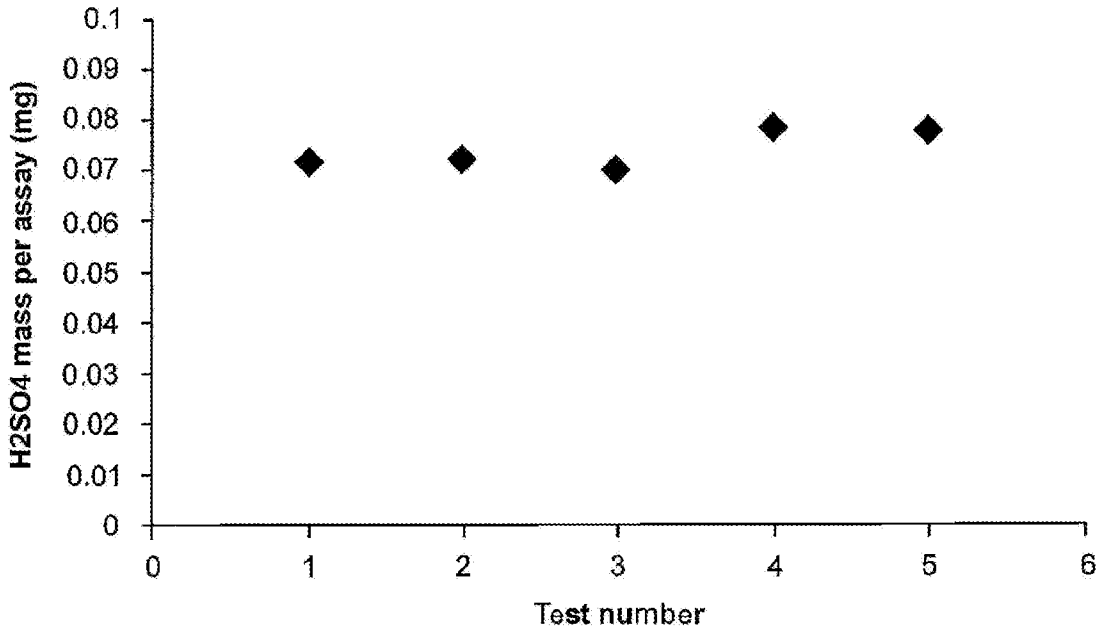

FIGURE 8

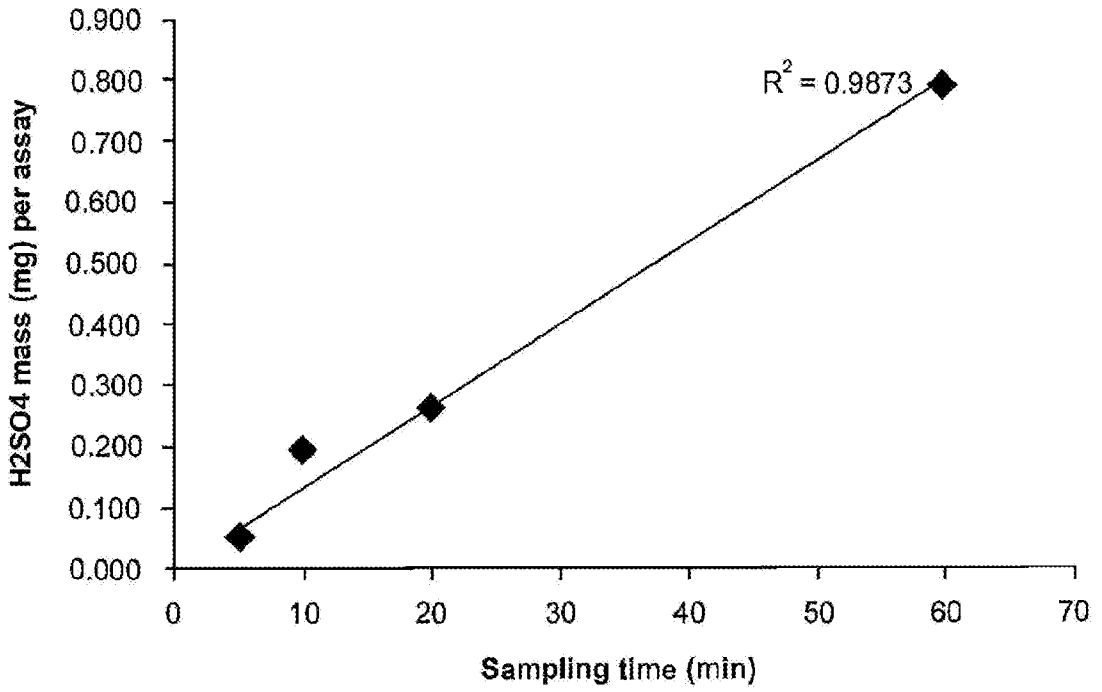

FIGURE 9

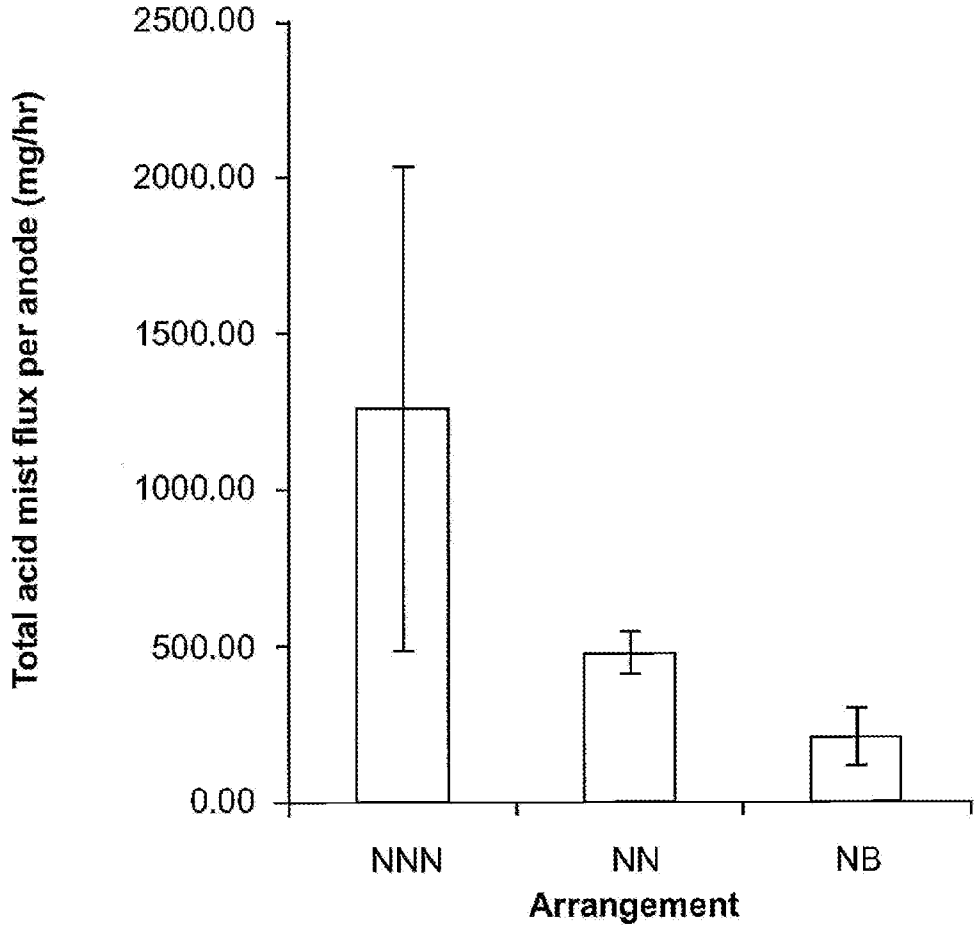

FIGURE 10

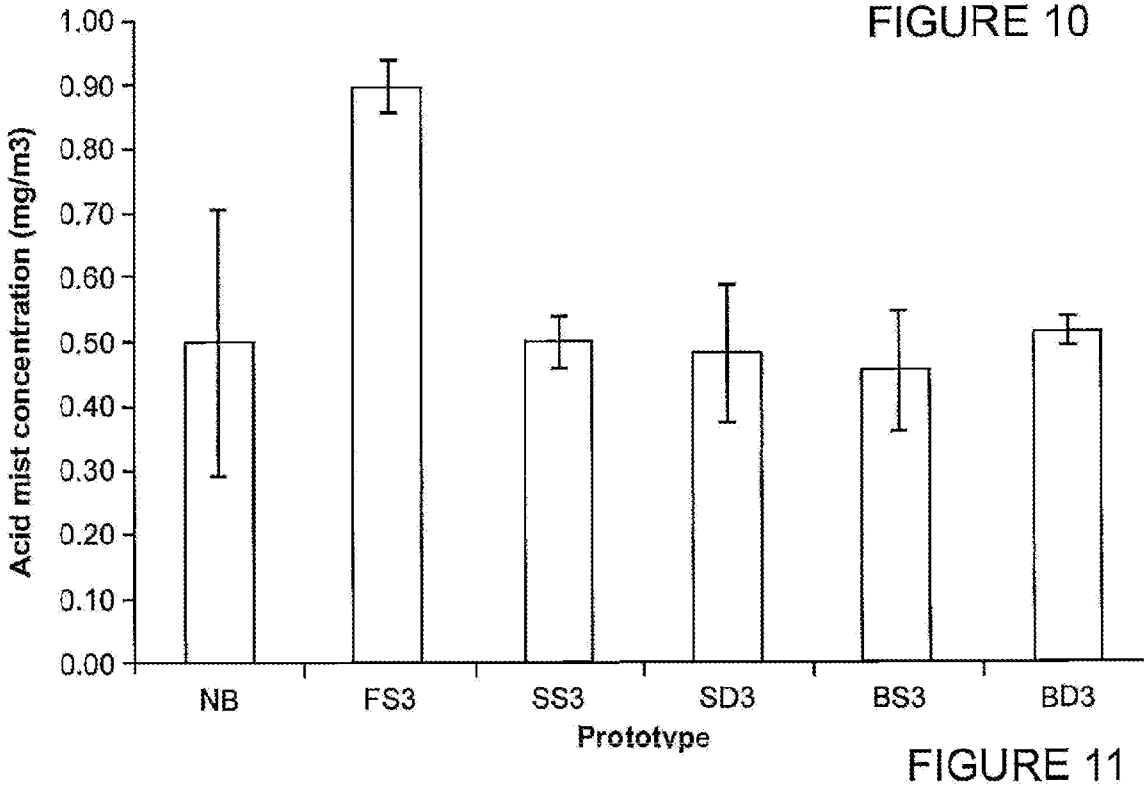

FIGURE 11

INTERNATIONAL SEARCH REPORT

International application No.
PCT/AU2014/000088

A. CLASSIFICATION OF SUBJECT MATTER

C25D 21/04 (2006.01) C25C 7/00 (2006.01)

According to International Patent Classification (IPC) or to both national classification and IPC

B. FIELDS SEARCHED

Minimum documentation searched (classification system followed by classification symbols)

Documentation searched other than minimum documentation to the extent that such documents are included in the fields searched

Electronic data base consulted during the international search (name of data base and, where practicable, search terms used)

Epodoc & WPI: IPC & CPC: (C25D 21/04 or C25D 7/00 or B08B 15/-) and (fume? or vapo+ or mist+ or partic+ or gas+ or bubbl+ or aerosol?) and (hood or canop+ or electrode_cap) and (elong+ or edge? or surface? or upper or lower)

X-full: TXTAU1, TXTCA1, TXTEP1, TXTGB1, TXTSG1, TXTUS0, TXTUS1, TXTUS2, TXTUS3, TXTUS4, TXTUS5, TXTWO1, WPI, EPODOC

C. DOCUMENTS CONSIDERED TO BE RELEVANT

Category*	Citation of document, with indication, where appropriate, of the relevant passages	Relevant to claim No.
	Documents are listed in the continuation of Box C	

[X] Further documents are listed in the continuation of Box C [X] See patent family annex

* Special categories of cited documents:

"A" document defining the general state of the art which is not considered to be of particular relevance

"E" earlier application or patent but published on or after the international filing date

"L" document which may throw doubts on priority claim(s) or which is cited to establish the publication date of another citation or other special reason (as specified)

"O" document referring to an oral disclosure, use, exhibition or other means

"P" document published prior to the international filing date but later than the priority date claimed

"T" later document published after the international filing date or priority date and not in conflict with the application but cited to understand the principle or theory underlying the invention

"X" document of particular relevance; the claimed invention cannot be considered novel or cannot be considered to involve an inventive step when the document is taken alone

"Y" document of particular relevance; the claimed invention cannot be considered to involve an inventive step when the document is combined with one or more other such documents, such combination being obvious to a person skilled in the art

"&" document member of the same patent family

Date of the actual completion of the international search	Date of mailing of the international search report
26 March 2014	26 March 2014
Name and mailing address of the ISA/AU	**Authorised officer**
AUSTRALIAN PATENT OFFICE PO BOX 200, WODEN ACT 2606, AUSTRALIA Email address: pct@ipaustralia.gov.au Facsimile No.: +61 2 6283 7999	David Bell AUSTRALIAN PATENT OFFICE (ISO 9001 Quality Certified Service) Telephone No. 0262832309

INTERNATIONAL SEARCH REPORT		International application No.
C (Continuation).	DOCUMENTS CONSIDERED TO BE RELEVANT	**PCT/AU2014/000088**

Category*	Citation of document, with indication, where appropriate, of the relevant passages	Relevant to claim No.
A	US 8361287 B2 (Penna Wittig et al) 29 January 2013 Column 4 line 59 to column 8 line 7, claim 1, Figures 2,3 and 6	
A	US 4668353 A (Smith et al) 26 May 1987 Column 1 line 40 to column 3 line 53, Claim 1, figures 3, 7, 8	
A	US 5470445 A (Murray et al) 28 November 1995 Column 3 line 66 to column 4 line 48 Column 5 line 50 to column 6 line 24, Claim 1, figures 2, 4A and 8	

INTERNATIONAL SEARCH REPORT

International application No.
PCT/AU2014/000088

Box No. II Observations where certain claims were found unsearchable (Continuation of item 2 of first sheet)

This international search report has not been established in respect of certain claims under Article 17(2)(a) for the following reasons:

1. ☐ Claims Nos.:

because they relate to subject matter not required to be searched by this Authority, namely:

the subject matter listed in Rule 39 on which, under Article 17(2)(a)(i), an international search is not required to be carried out, including

2. ☒ Claims Nos.: **24 to 30**

because they relate to parts of the international application that do not comply with the prescribed requirements to such an extent that no meaningful international search can be carried out, specifically:

See Supplemental Box

3. ☐ Claims Nos:

because they are dependent claims and are not drafted in accordance with the second and third sentences of Rule 6.4(a)

Box No. III Observations where unity of invention is lacking (Continuation of item 3 of first sheet)

This International Searching Authority found multiple inventions in this international application, as follows:

1. ☐ As all required additional search fees were timely paid by the applicant, this international search report covers all searchable claims.
2. ☐ As all searchable claims could be searched without effort justifying additional fees, this Authority did not invite payment of additional fees.
3. ☐ As only some of the required additional search fees were timely paid by the applicant, this international search report covers only those claims for which fees were paid, specifically claims Nos.:
4. ☐ No required additional search fees were timely paid by the applicant. Consequently, this international search report is restricted to the invention first mentioned in the claims; it is covered by claims Nos.:

Remark on Protest

☐ The additional search fees were accompanied by the applicant's protest and, where applicable, the payment of a protest fee.

☐ The additional search fees were accompanied by the applicant's protest but the applicable protest fee was not paid within the time limit specified in the invitation.

☐ No protest accompanied the payment of additional search fees.

INTERNATIONAL SEARCH REPORT	International application No. PCT/AU2014/000088

Supplemental Box

Continuation of **Box II**
Claims 24 to 30 do not comply with Rule 6.2(a) because they rely on references to the description and/or drawings.

INTERNATIONAL SEARCH REPORT Information on patent family members	International application No. **PCT/AU2014/000088**

This Annex lists known patent family members relating to the patent documents cited in the above-mentioned international search report. The Australian Patent Office is in no way liable for these particulars which are merely given for the purpose of information.

Patent Document/s Cited in Search Report		**Patent Family Member/s**	
Publication Number	**Publication Date**	**Publication Number**	**Publication Date**
US 8361287 B2	29 Jan 2013	AU 2008289474 B2	12 Jul 2012
		CA 2696879 A1	26 Feb 2009
		MX 2010001916 A	11 Mar 2010
		PE 08612009 A1	08 Aug 2009
		US 2011108414 A1	12 May 2011
		US 8361287 B2	29 Jan 2013
		WO 2009025837 A1	26 Feb 2009
US 4668353 A	26 May 1987	AU 5645486 A	24 Sep 1987
		BE 904644 A1	18 Aug 1986
		DE 3613583 A1	24 Sep 1987
		JP S62230995 A	09 Oct 1987
		US 4668353 A	26 May 1987
US 5470445 A	28 Nov 1995	AU 704786 B2	06 May 1999
		AU 2386395 A	30 Oct 1995
		AU 5614594 A	22 Jun 1994
		BR 9307492 A	01 Jun 1999
		BR 9507359 A	16 Sep 1997
		CA 2149341 A1	09 Jun 1994
		CA 2186267 A1	19 Oct 1995
		EP 0755463 A1	29 Jan 1997
		EP 0755463 B1	24 Jul 2002
		FI 964027 A	29 Nov 1996
		MX 9604680 A	31 Dec 1997
		NO 964347 A	11 Dec 1996
		US 5470445 A	28 Nov 1995
		US 5609738 A	11 Mar 1997
		WO 9412696 A1	09 Jun 1994
		WO 9527811 A1	19 Oct 1995

End of Annex

Due to data integration issues this family listing may not include 10 digit Australian applications filed since May 2001.